ROGUE®

FML-6 FUNCTIONAL TRAINER

WEIGHT STACK OPTION

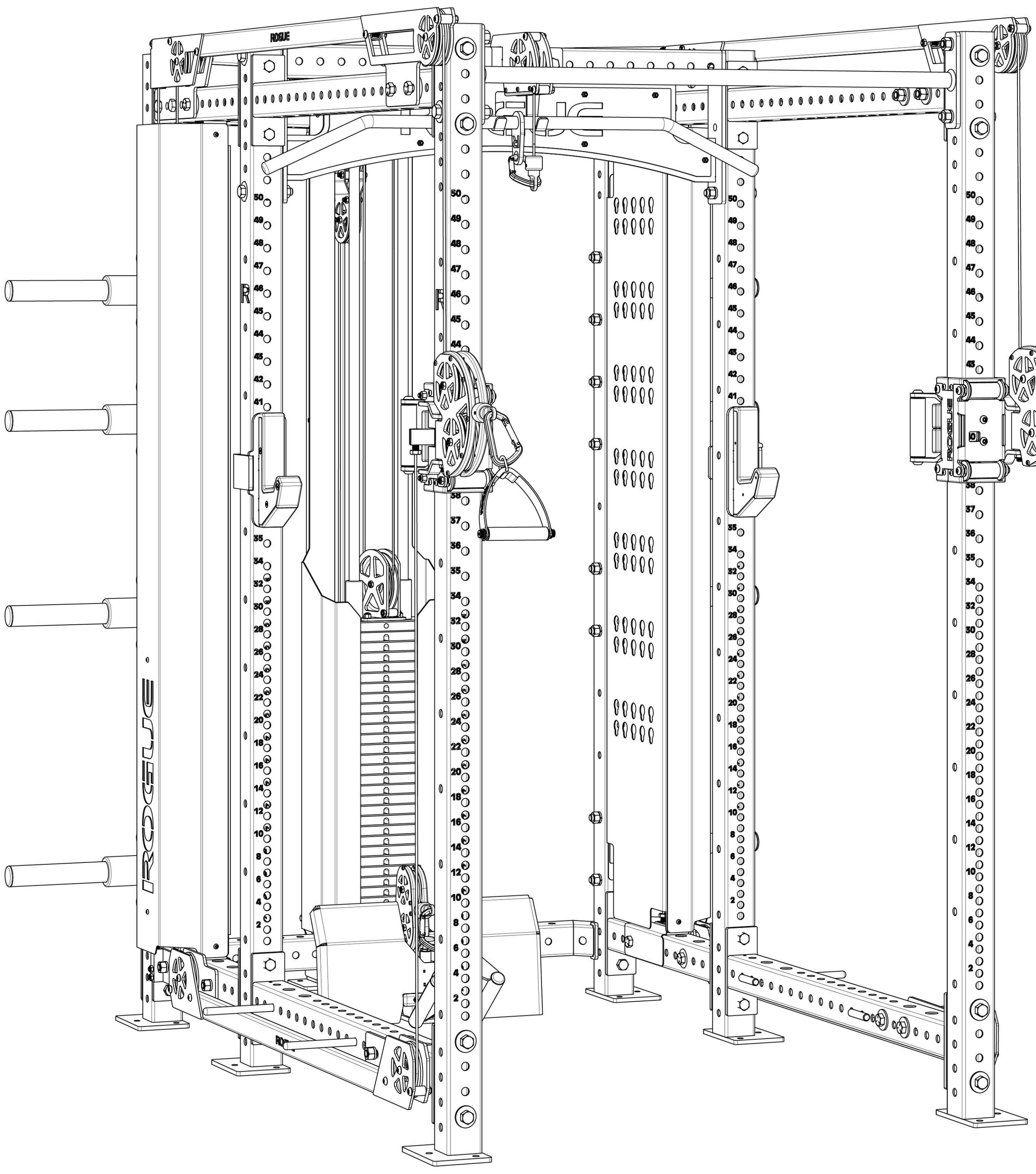

⚠ IMPORTANT SAFETY INFORMATION

DISCLAIMER:

Resistance training, gymnastics training, and activities at height are potentially dangerous and may lead to severe injury or even death. Use common sense when training, obtain instruction in the proper execution of movements, and understand your limitations. This equipment must only be used by competent and responsible persons. Obtaining instruction in appropriate techniques and methods of use is your own responsibility. You assume all risks and responsibilities for all damage, injury or death which may occur during or following incorrect use of this equipment in any matter whatsoever. Rogue Fitness bears no liability beyond the replacement value of the equipment in question.

WARNING:

THIS RACK MUST BE BOLTED TO THE FLOOR BEFORE USE.
MINIMUM TWO PEOPLE REQUIRED FOR SAFE ASSEMBLY.
MISUSE OF THIS RACK CAN RESULT IN SEVERE INJURY.

Both Rogue Fitness and buyer disclaim any express or implied warranty, including, without limitation, warranties or merchantability and/or fitness for a particular purpose with respect to the equipment. Buyer assumes all liability to use of equipment.

TABLE OF CONTENTS

RML-6 RACK

Included Tools.....3

Included Parts.....4

Assembly.....13

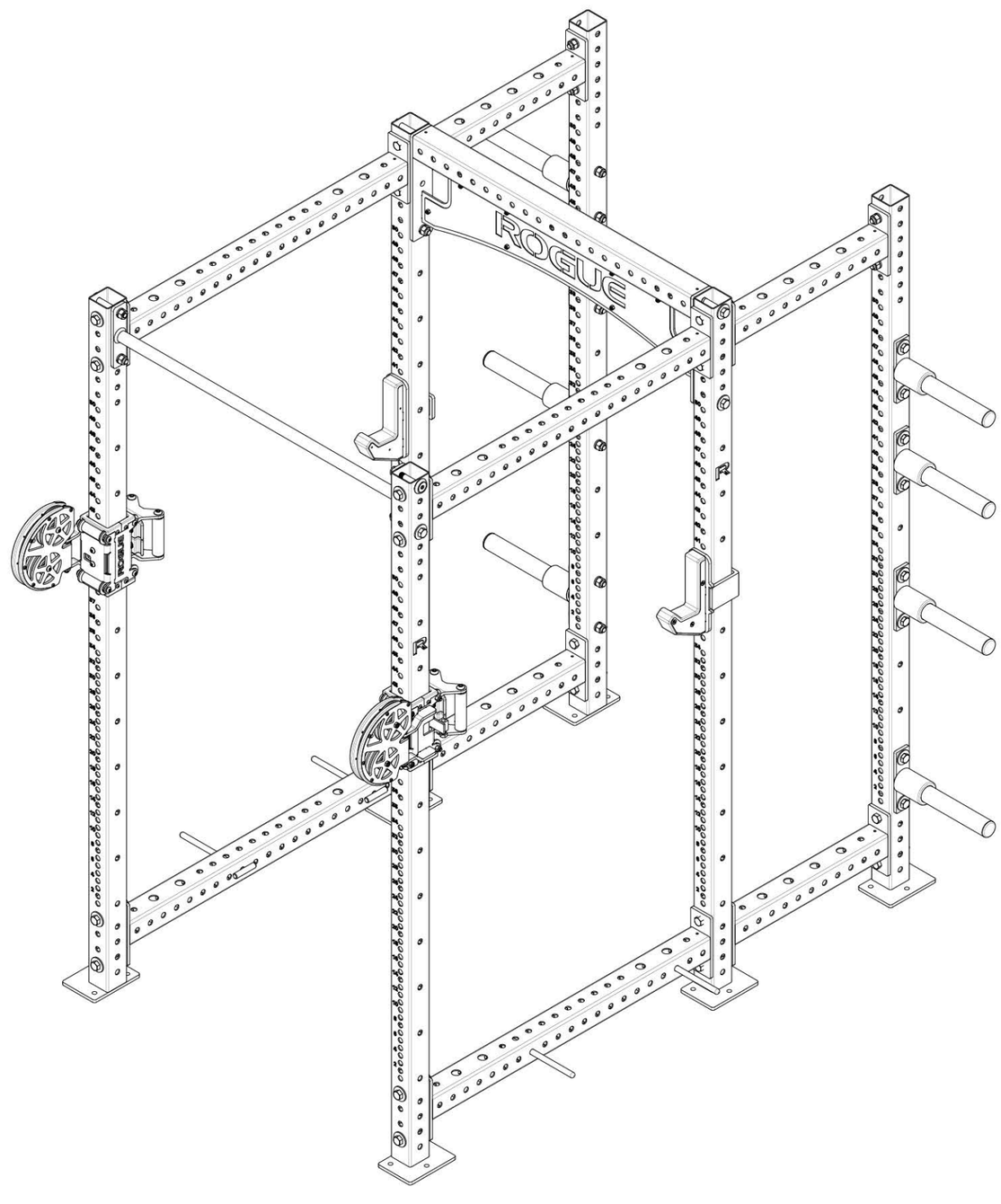

FML-6 ADD-ON KIT

Included Tools.....3

Included Parts.....6

Assembly.....17

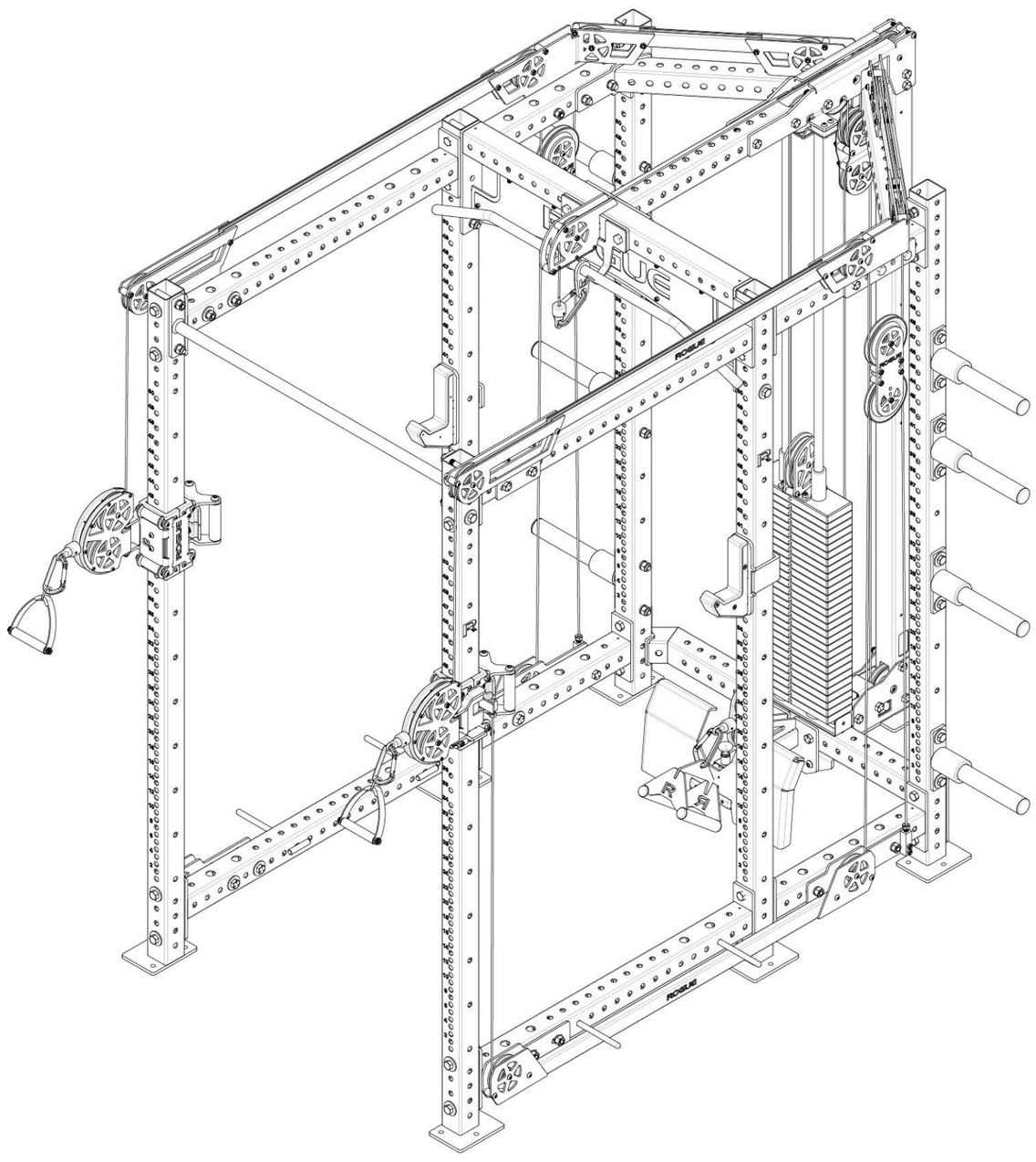

FML-6 SHROUD KIT

Included Tools.....3

Included Parts.....11

Assembly.....50

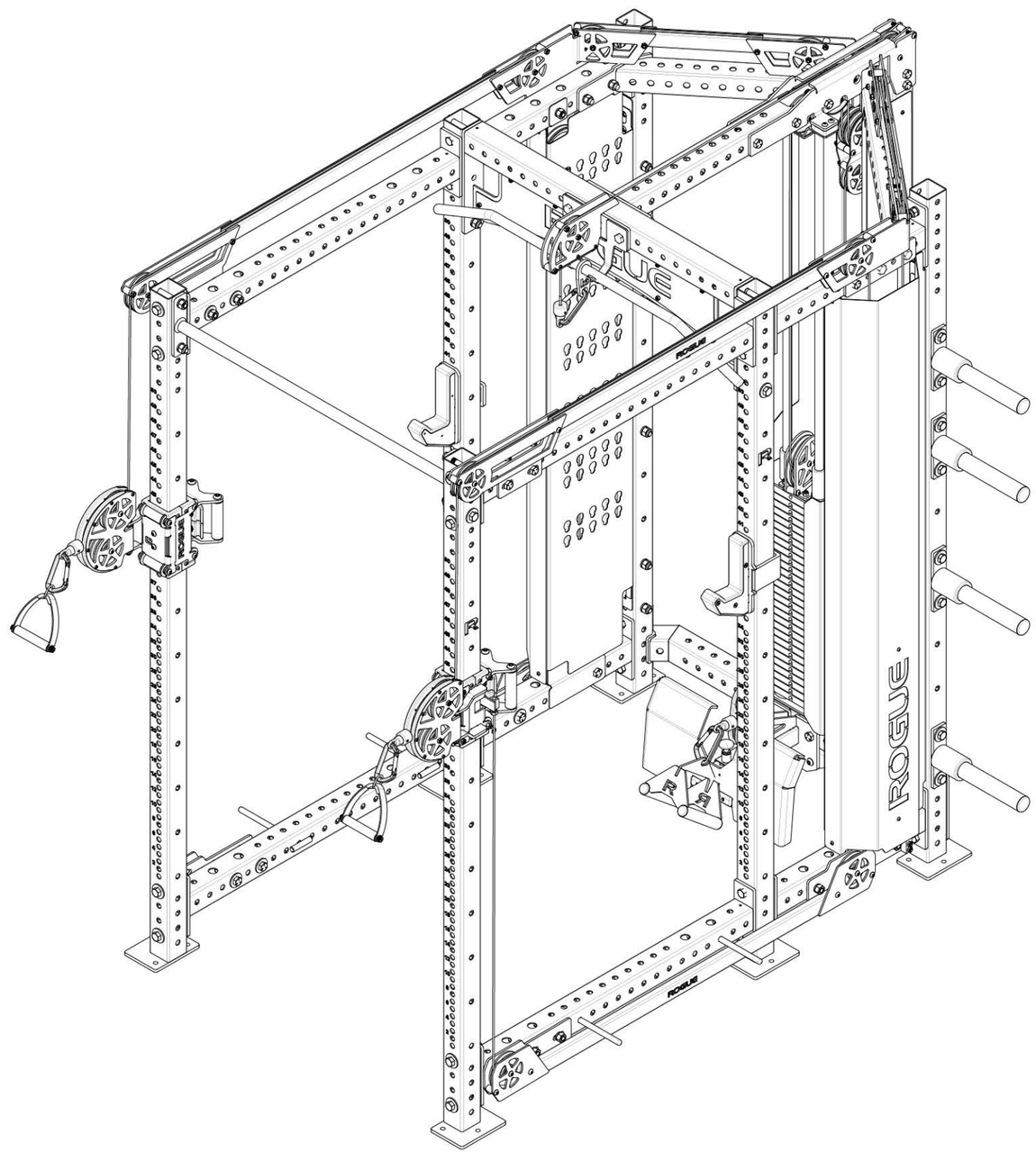

INCLUDED TOOLS

Note: Images not shown at scale

1 Qty: **2x**

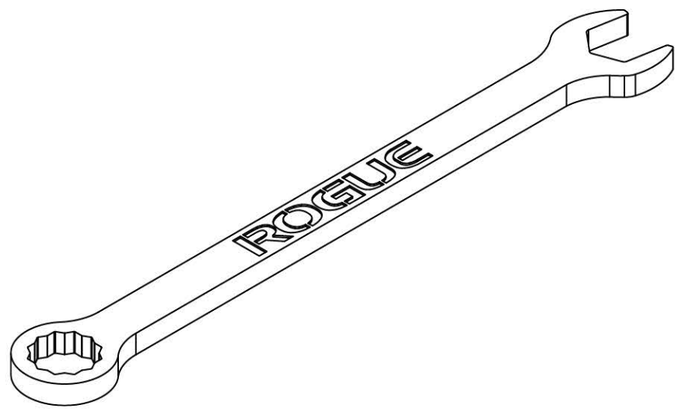

15/16” Wrench

2 Qty: **1x**

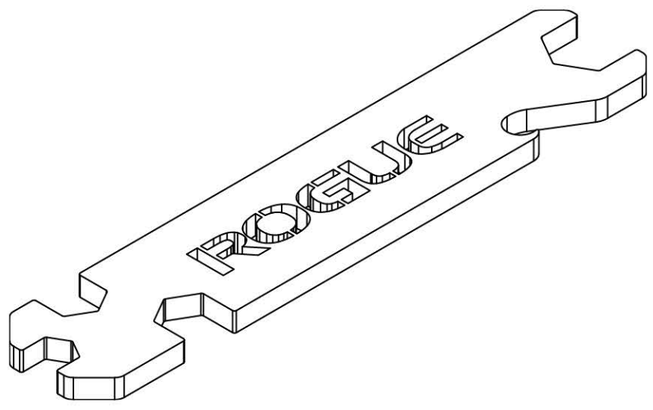

Multi Tool (3/4”, 5/8”, 9/16”, 7/16” Wrench)

3 Qty: **1x**

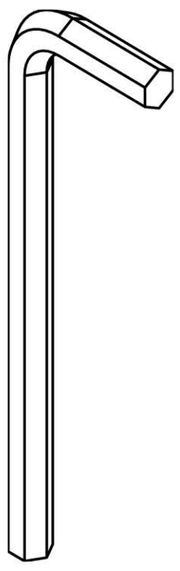

3/8” Allen Key

4 Qty: **1x**

5/16” Allen Key

5 Qty: **1x**

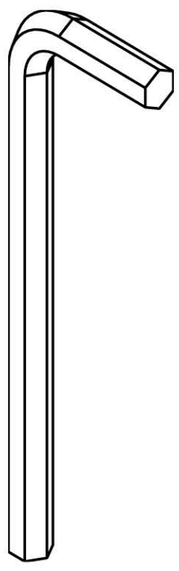

7/32” Allen Key

6 Qty: **1x**

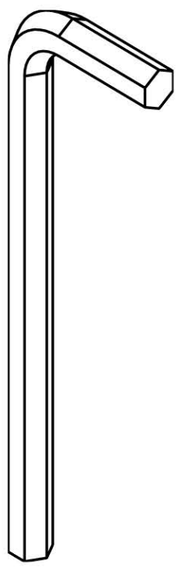

5/32” Allen Key

7 Qty: **1x**

1/8” Allen Key

8 Qty: **1x**

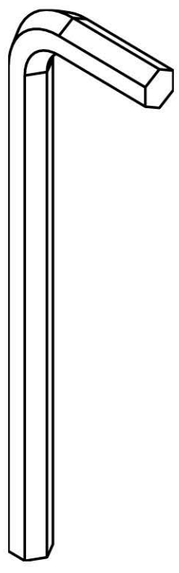

3/32” Allen Key

INCLUDED PARTS: RML-690 FULL RACK

Note: Images not shown at scale.

1 Qty: **6x**

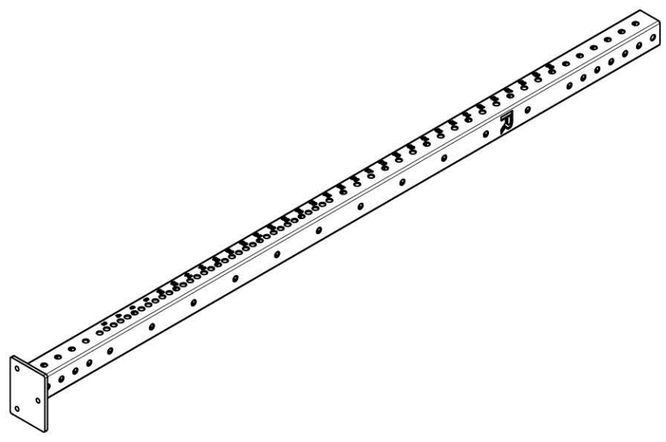

90” Monster Lite Upright

2 Qty: **4x**

*

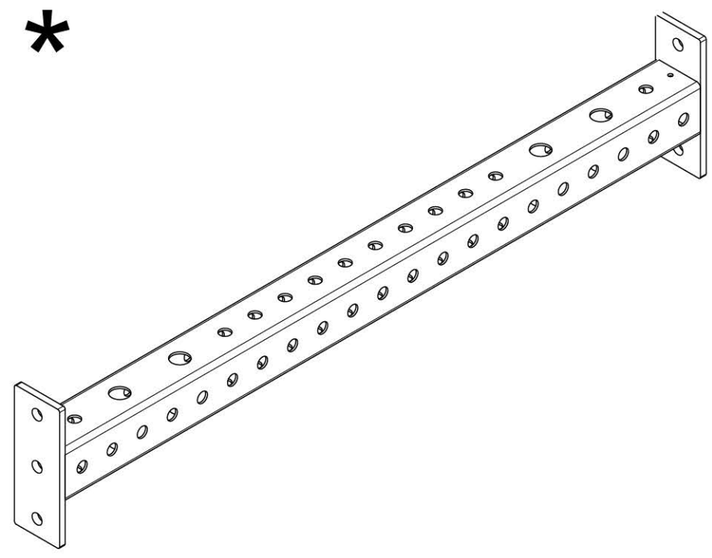

Front Crossmember

3 Qty: **4x**

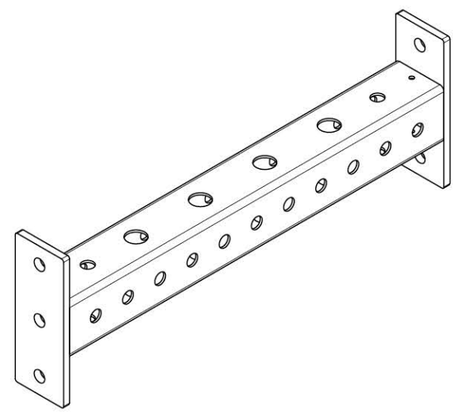

24” Rear Crossmember

4 Qty: **1x**

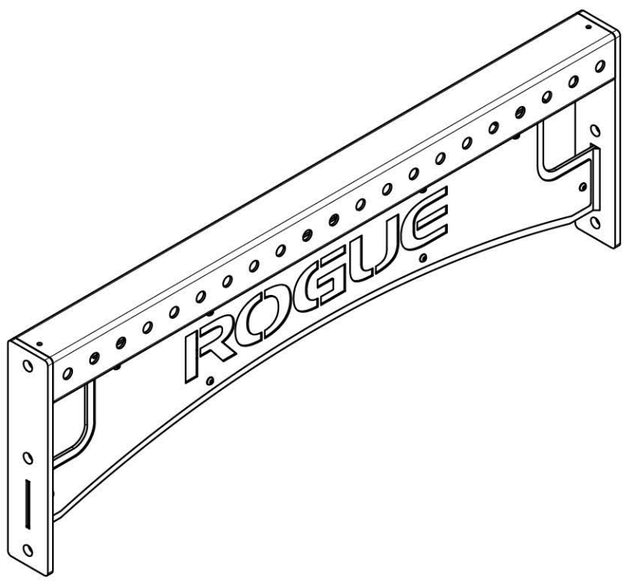

Nameplate Crossmember

5 Qty: **1x**

**

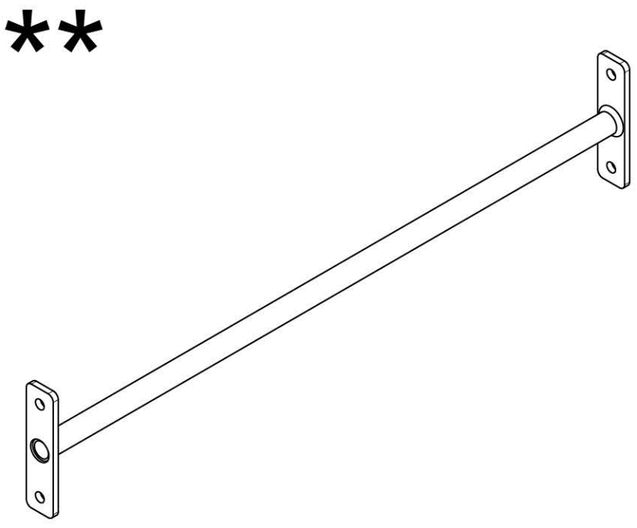

Pull-up Bar

6 Qty: **8x**

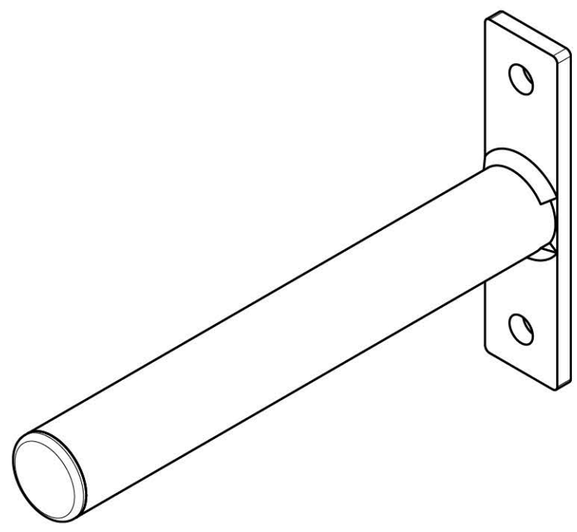

Monster Lite Plate Storage Pin

7 Qty: **1x**

**

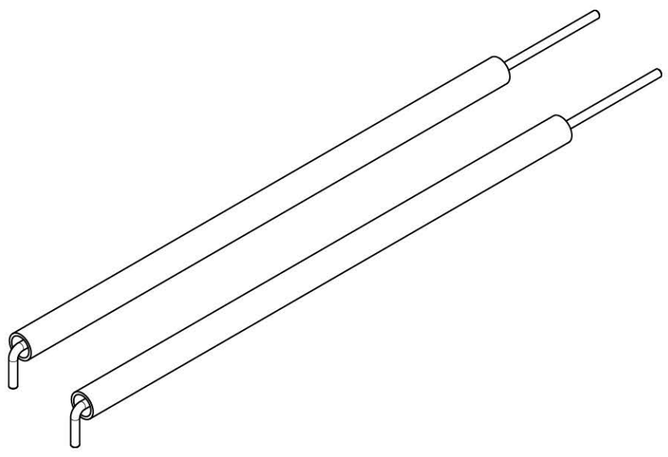

Pair of Safety Spotter Arms

8 Qty: **4x**

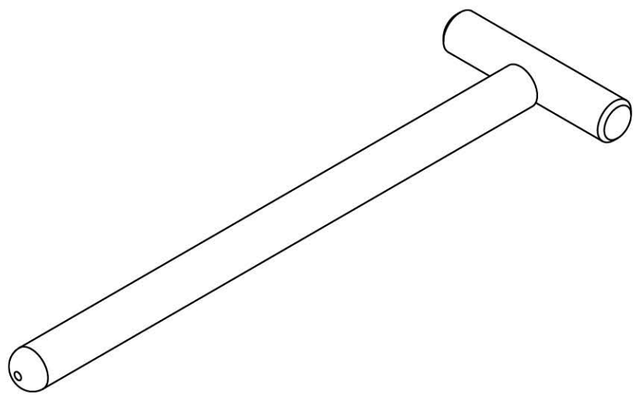

Band Peg

9 Qty: **1x**

**

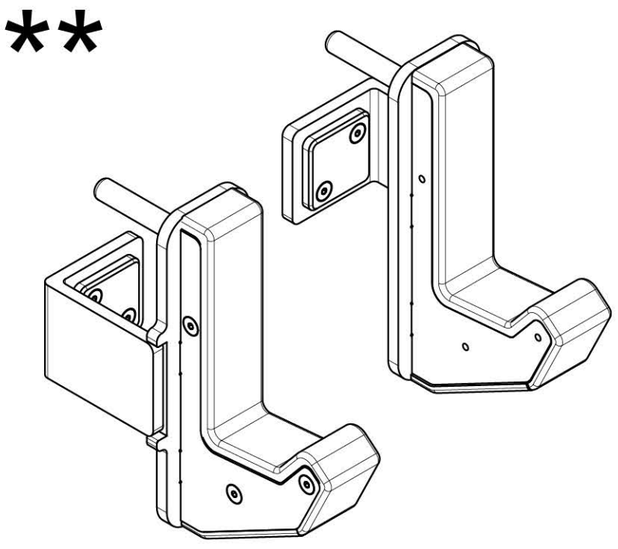

Pair of Monster Lite J-cups

10 Qty: **8x**

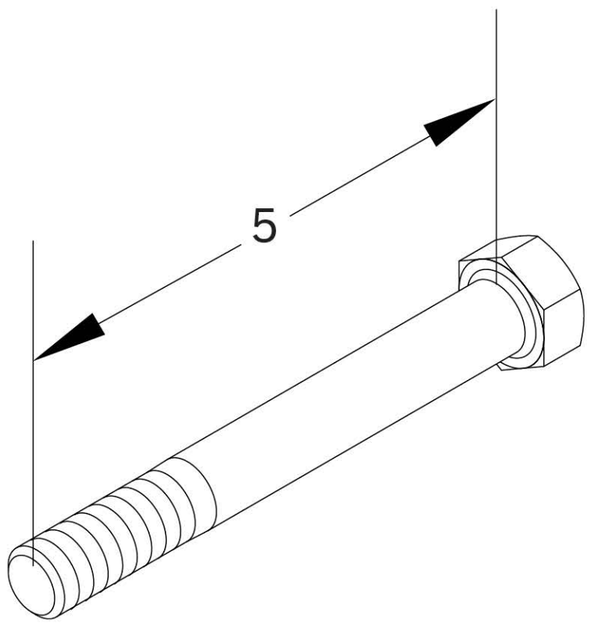

5/8” x 5” Hex Bolt

11 Qty: **40x**

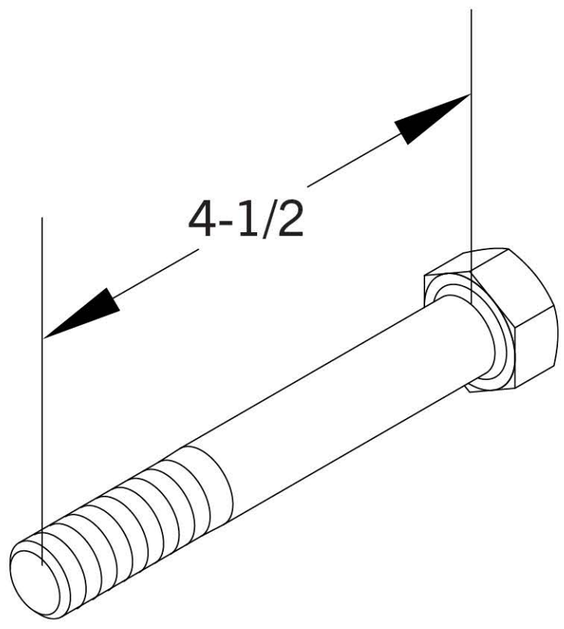

5/8” x 4-1/2” Hex Bolt

12 Qty: **40x**

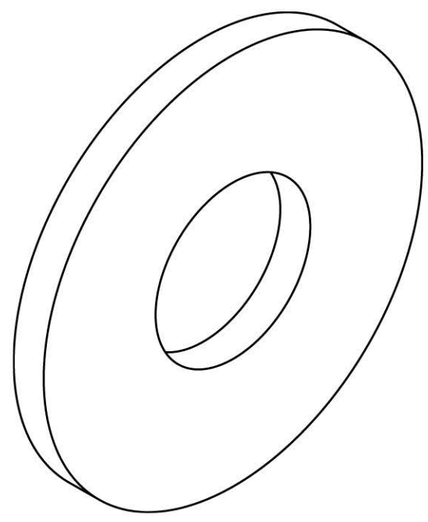

5/8” Flat Washer

* Front Crossmember length depends on Rack Depth selection made at checkout.
** Items may look different than drawings shown. Style depends on selection made at checkout.

INCLUDED PARTS: RML-690 FULL RACK

Note: Images not shown at scale.

13 Qty: **48x**

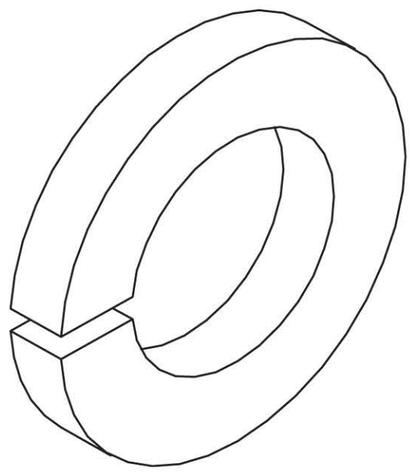

5/8” Lock Washer

14 Qty: **48x**

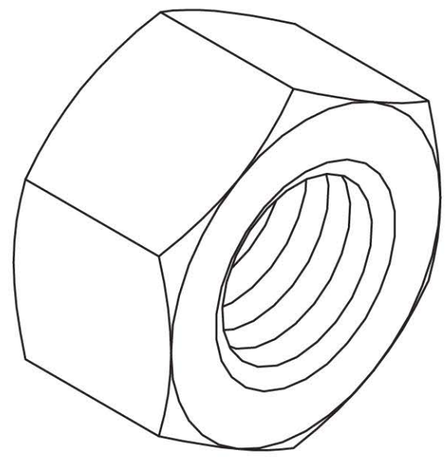

5/8” Hex Nut

INCLUDED PARTS: FML-6 ADD-ON KIT

Note: Images not shown at scale.

15 Qty: **1x**

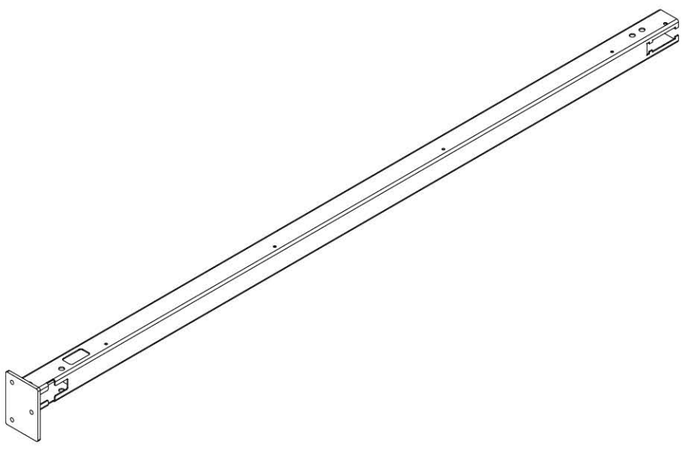

90” Rear 3X3 Upright

16 Qty: **1x**

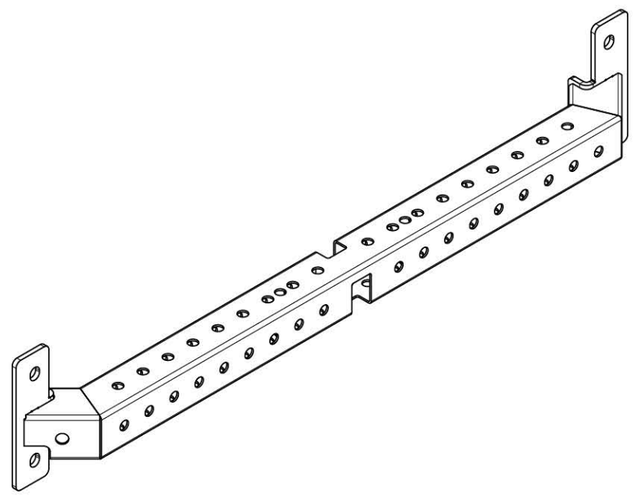

Low Row Crossmember

17 Qty: **1x**

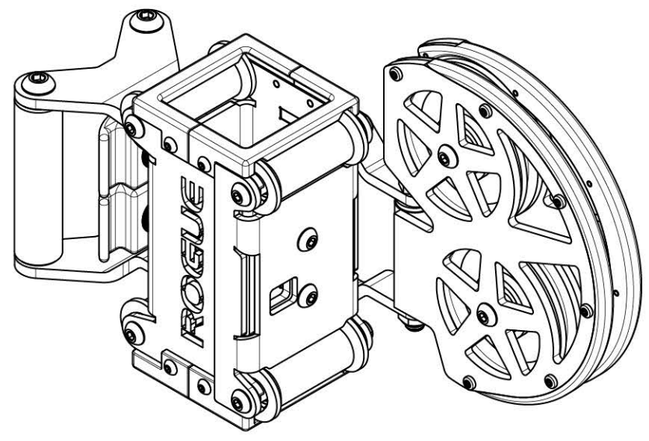

Swivel Trolley RH

18 Qty: **1x**

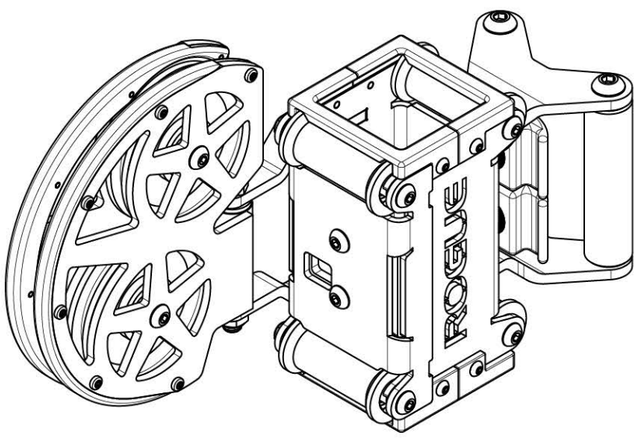

Swivel Trolley LH

19 Qty: **1x**

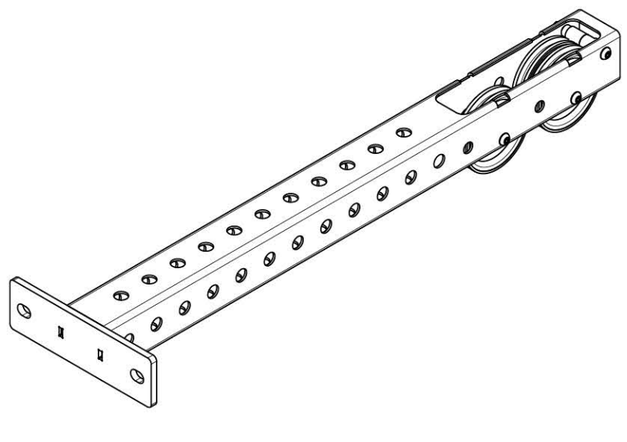

Top Center Crossmember

20 Qty: **1x**

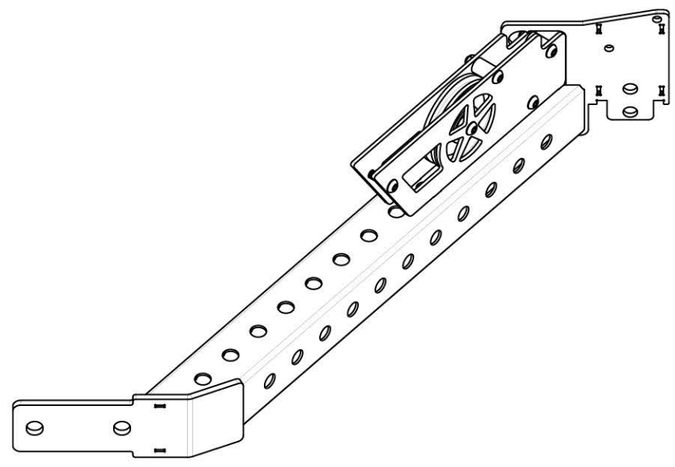

Top Rear Angle Crossmember - RH

21 Qty: **1x**

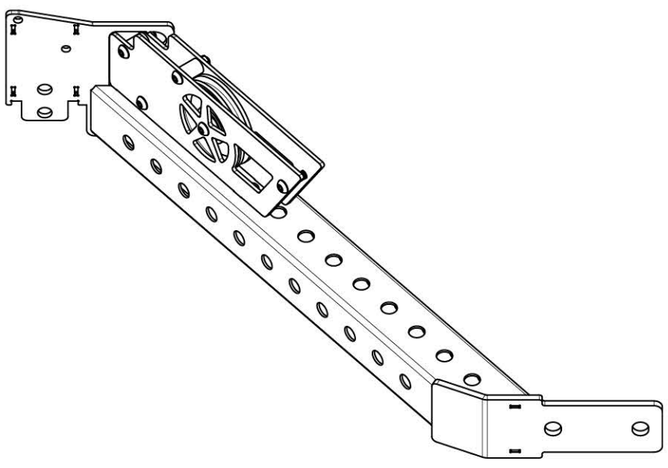

Top Rear Angle Crossmember - LH

22 Qty: **1x**

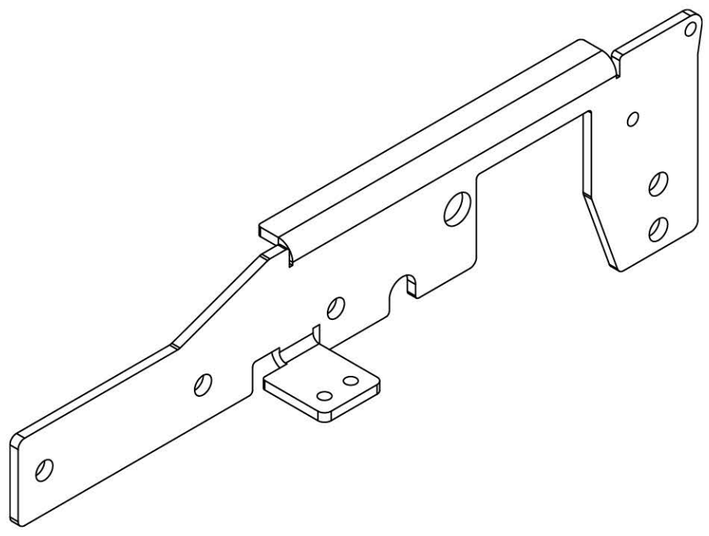

Top Rear Connector Plate - RH

23 Qty: **1x**

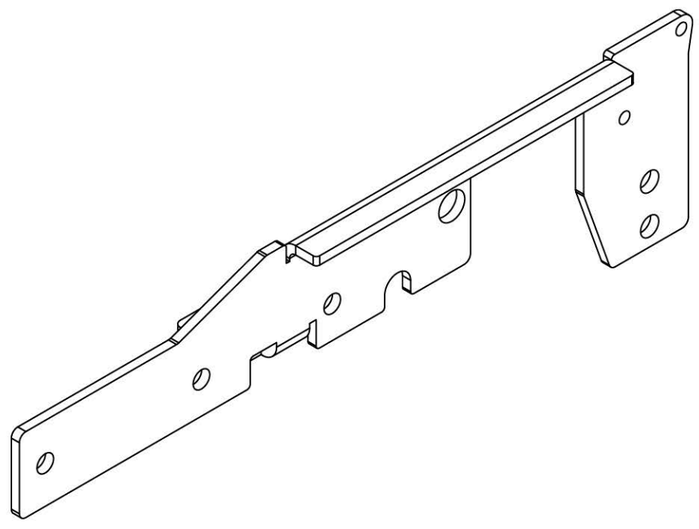

Top Rear Connector Plate - LH

24 Qty: **1x**

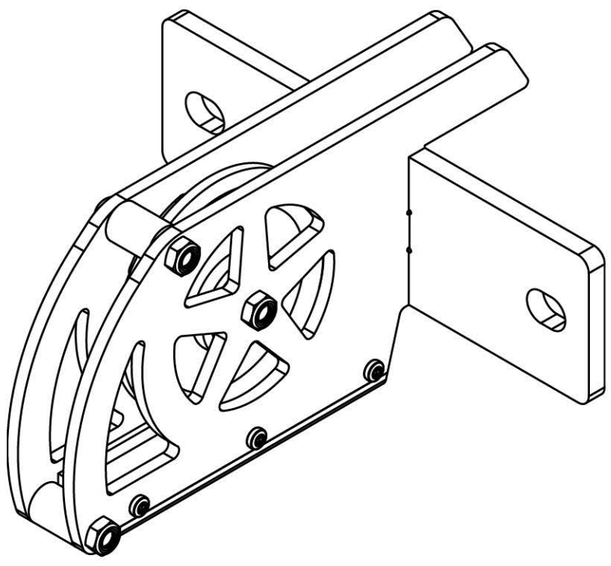

Lat Pulldown Pulley Bracket

25 Qty: **1x**

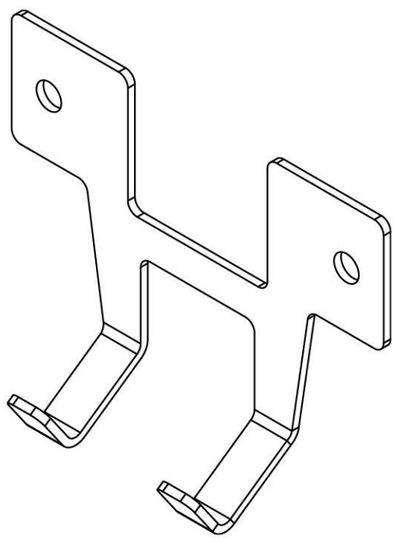

Lat Bar Hanger

26 Qty: **1x**

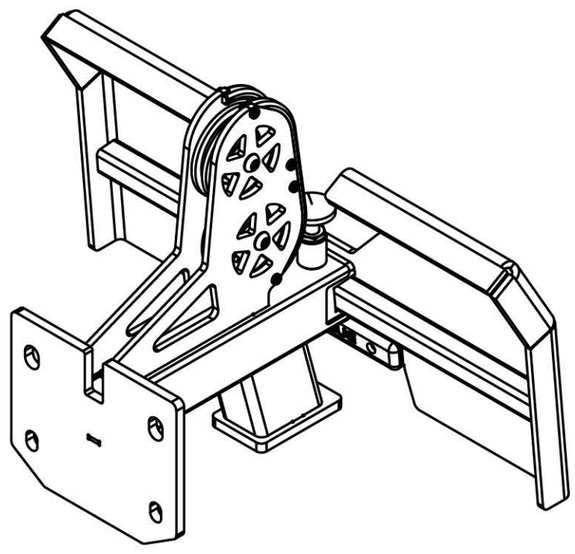

Low Row Footplate Assembly

INCLUDED PARTS: FML-6 ADD-ON KIT

Note: Images not shown at scale.

27 Qty: **1x**

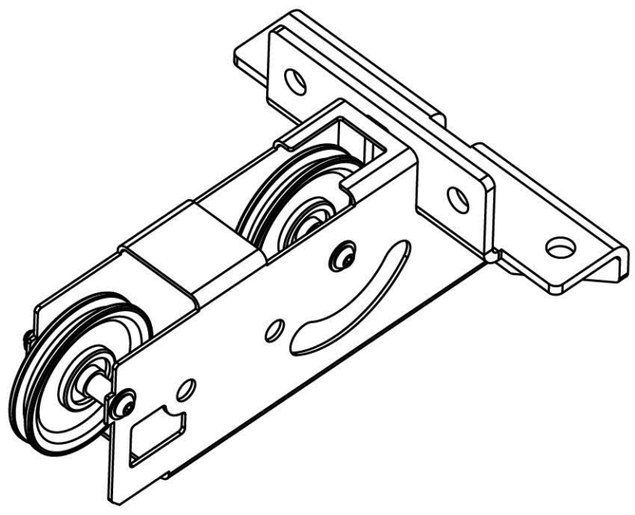

Low Rear Pulley Assembly

28 Qty: **2x**

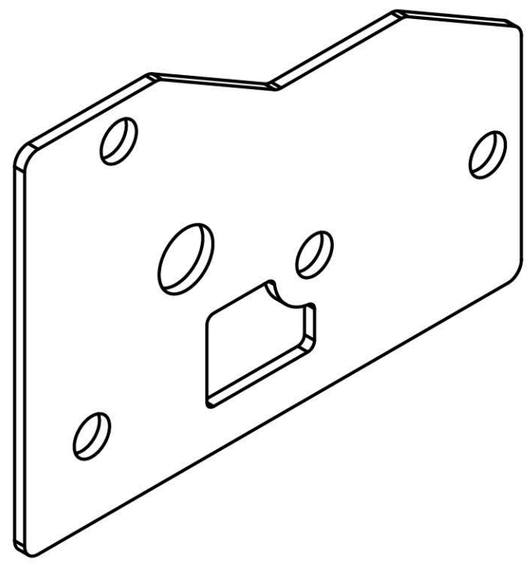

Rear Connector Plate

29 Qty: **2x**

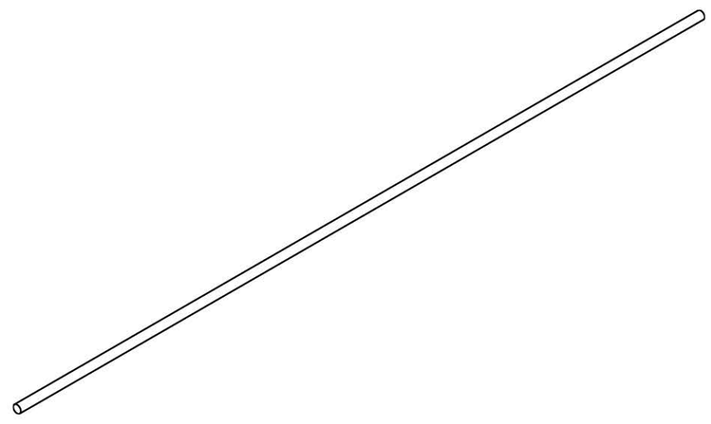

Guide Rod

30 Qty: **1x**

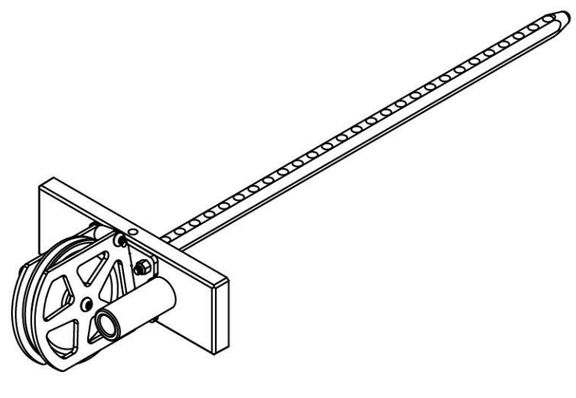

Weight Stack Stem

31 *Qty: **23x or 28x**

*

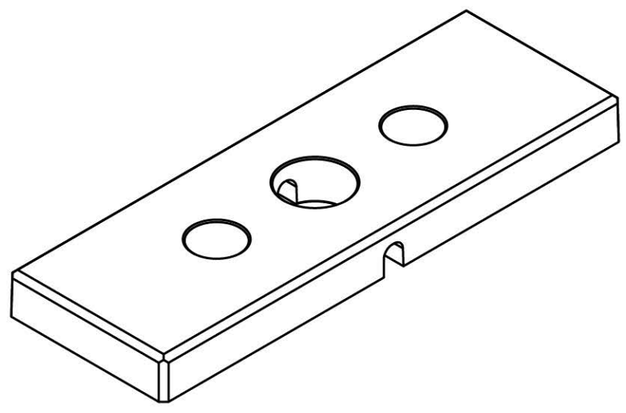

10LB Weight Stack Plate

32 Qty: **1x**

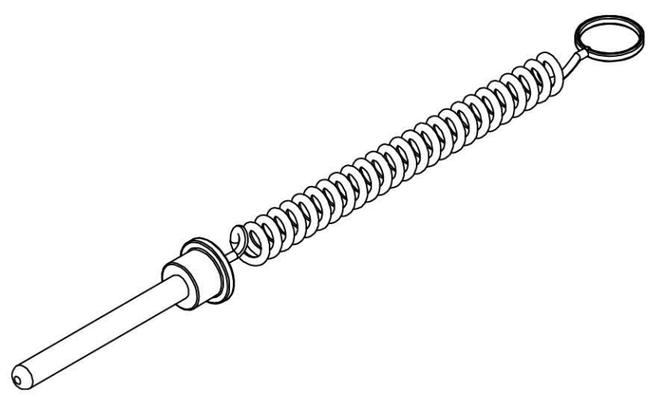

Weight Stack Selector Pin w/ Lanyard

33 Qty: **1x**

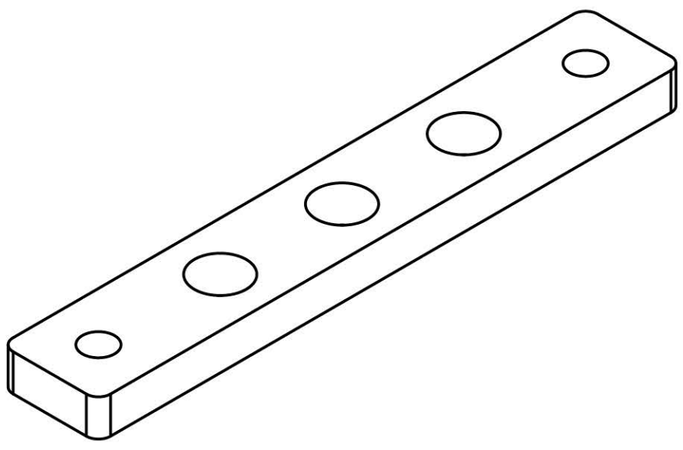

Weight Stack Spacer

34 Qty: **1x**

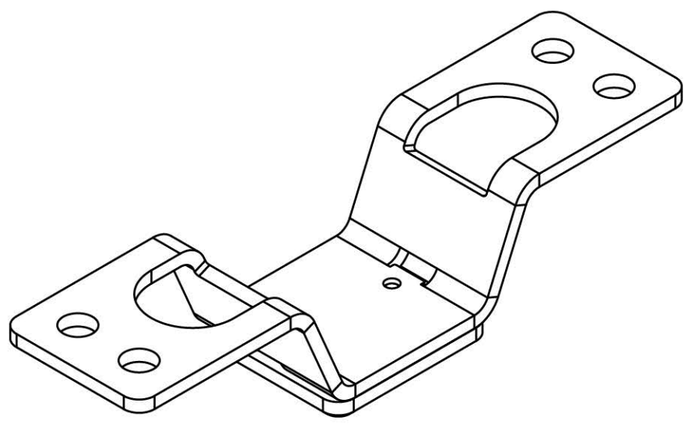

Top Weight Stack Stop Block

35 Qty: **2x**

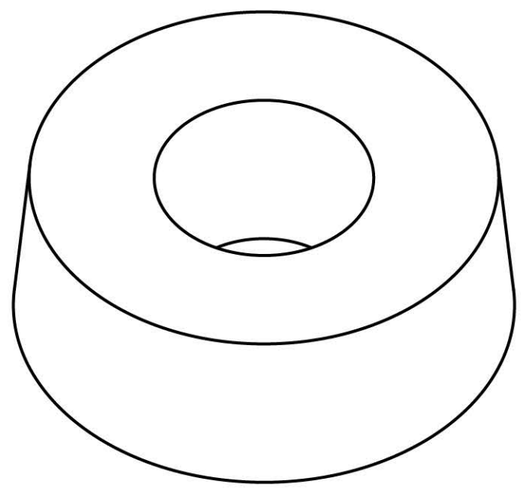

Weight Stack Bumper

36 Qty: **2x**

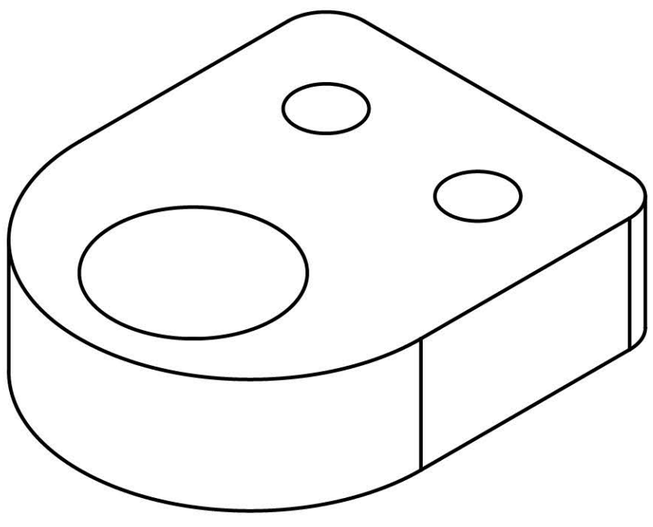

Guide Rod Spacer

37 Qty: **2x**

**

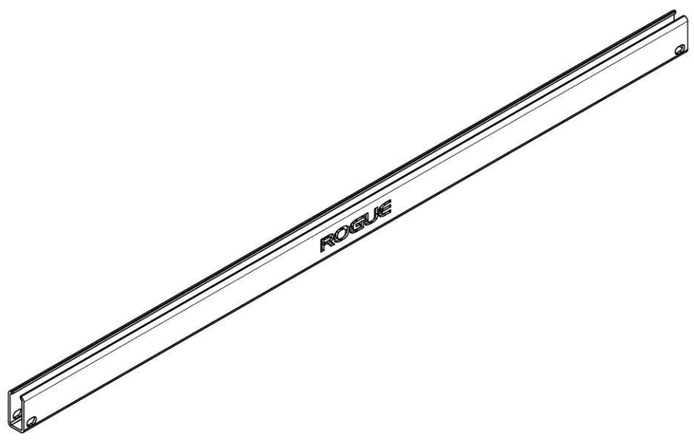

Top Cable Cover Rail (24”, 30”, or 43”)

38 Qty: **2x**

**

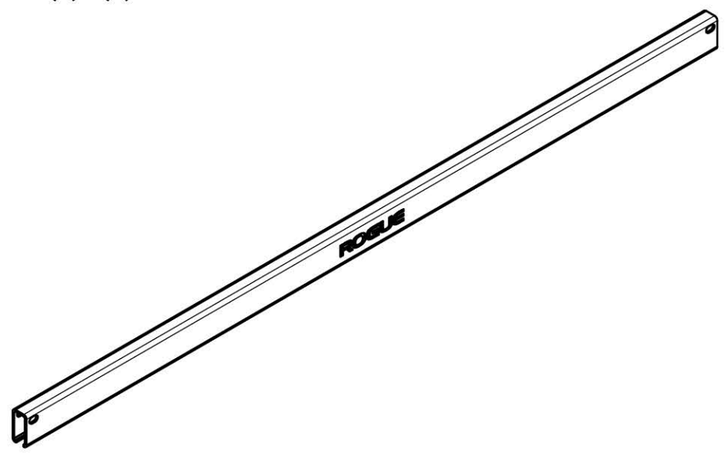

Low Cable Cover Rail (24”, 30”, or 43”)

* Quantity depends on 250 lb or 300 lb weight stack selected at checkout.

** 24”, 30”, or 43” length depends on rack depth selection made at checkout.

INCLUDED PARTS: FML-6 ADD-ON KIT

Note: Images not shown at scale.

39 Qty: **2x**

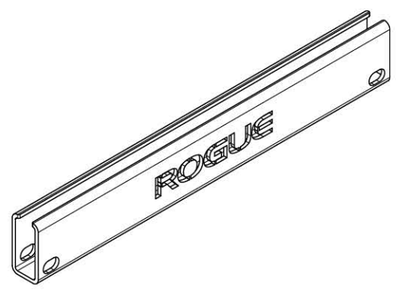

Short Cable Cover Rail

40 Qty: **1x**

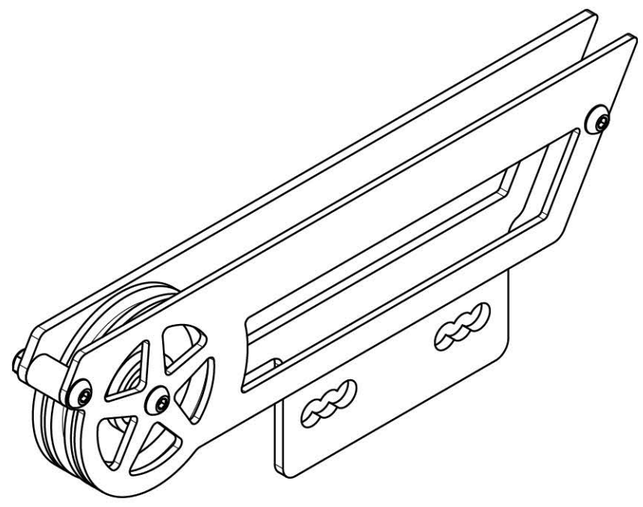

Top Front Side Pulley Assembly - RH

41 Qty: **1x**

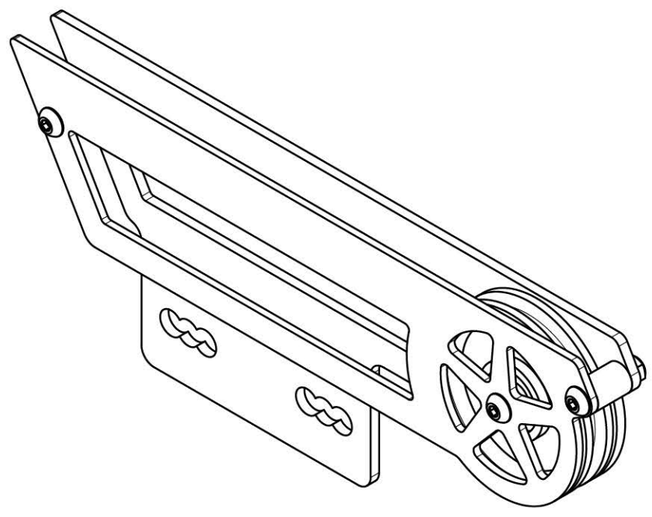

Top Front Side Pulley Assembly - LH

42 Qty: **1x**

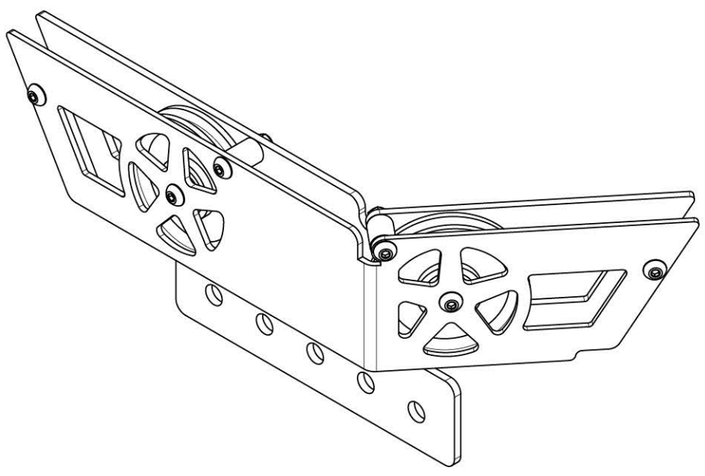

Top Rear Side Pulley Assembly - RH

43 Qty: **1x**

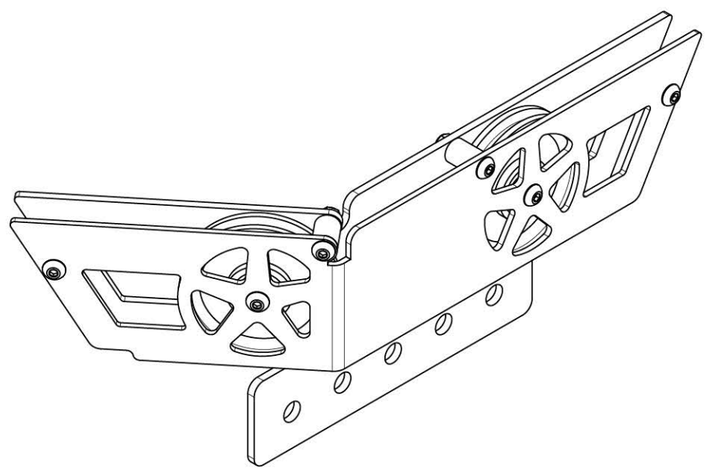

Top Rear Side Pulley Assembly - LH

44 Qty: **1x**

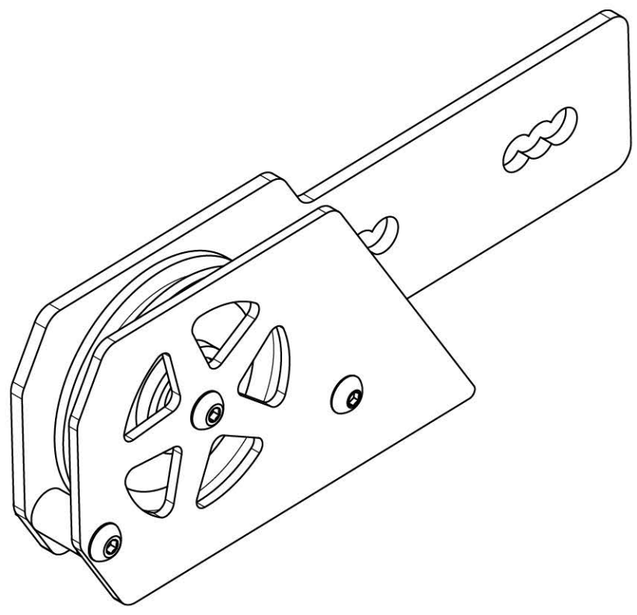

Bottom Front Side Pulley Assembly - RH

45 Qty: **1x**

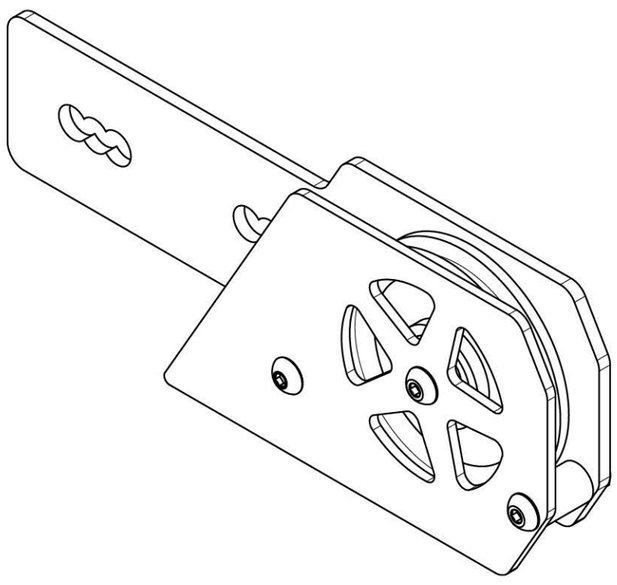

Bottom Front Side Pulley Assembly - LH

46 Qty: **1x**

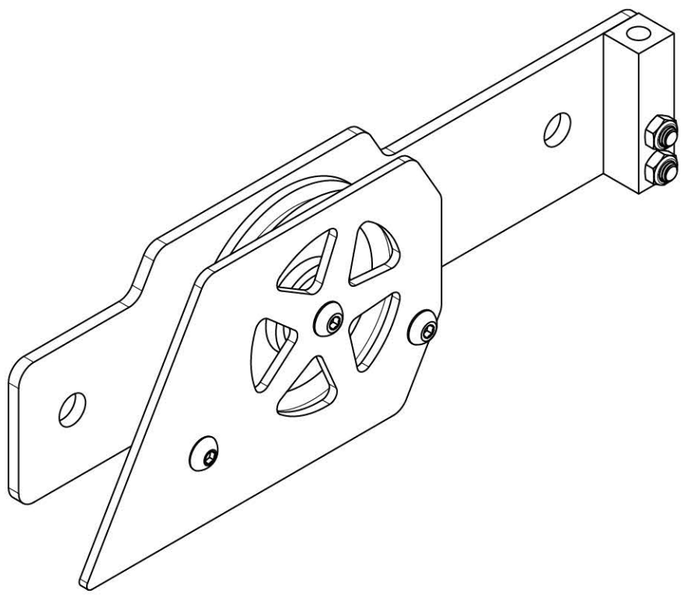

Bottom Rear Side Pulley Assembly - RH

47 Qty: **1x**

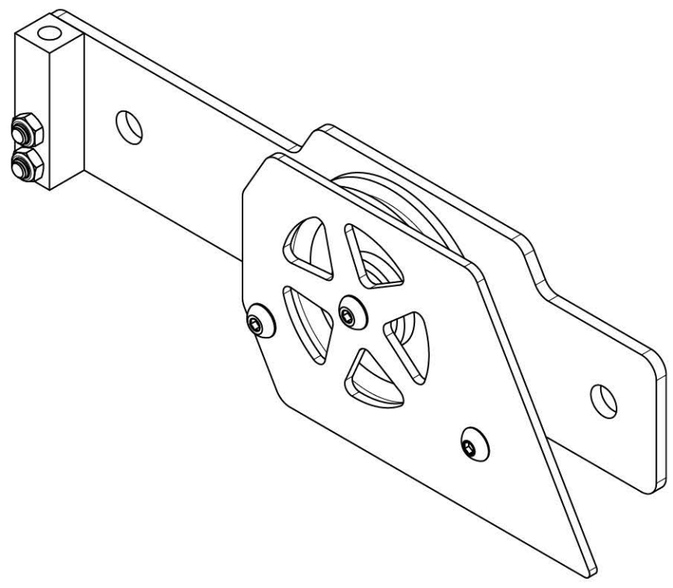

Bottom Rear Side Pulley Assembly - LH

48 Qty: **1x**

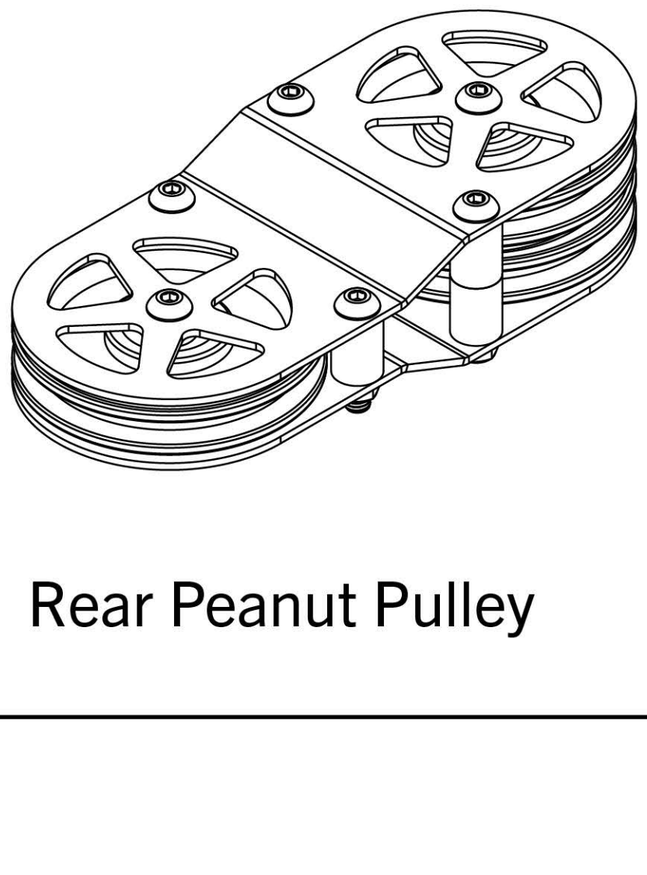

Rear Peanut Pulley

49 Qty: **2x**

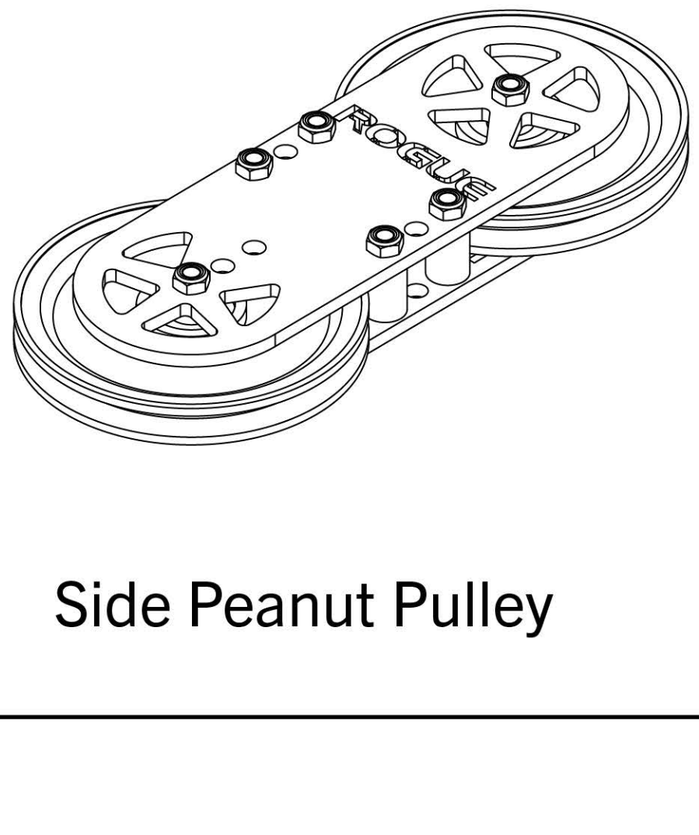

Side Peanut Pulley

50 Qty: **1x**

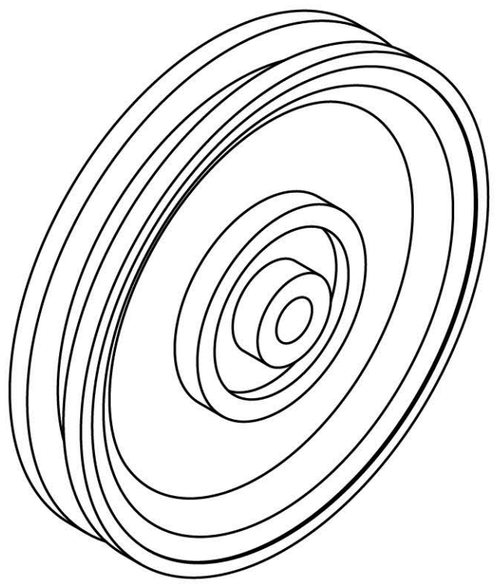

4.5” Pulley

INCLUDED PARTS: FML-6 ADD-ON KIT

Note: Images not shown at scale.

51 Qty: **1x**

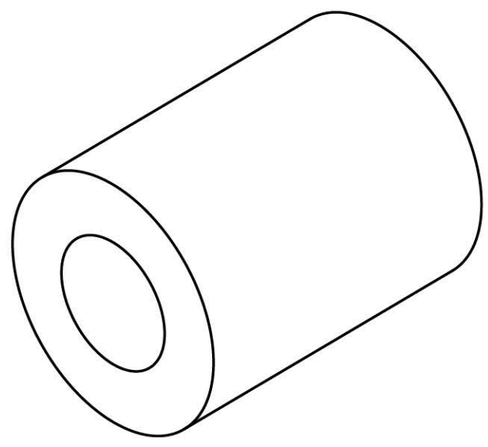

3/4” x 1” Cable Retainer

52 Qty: **1x**

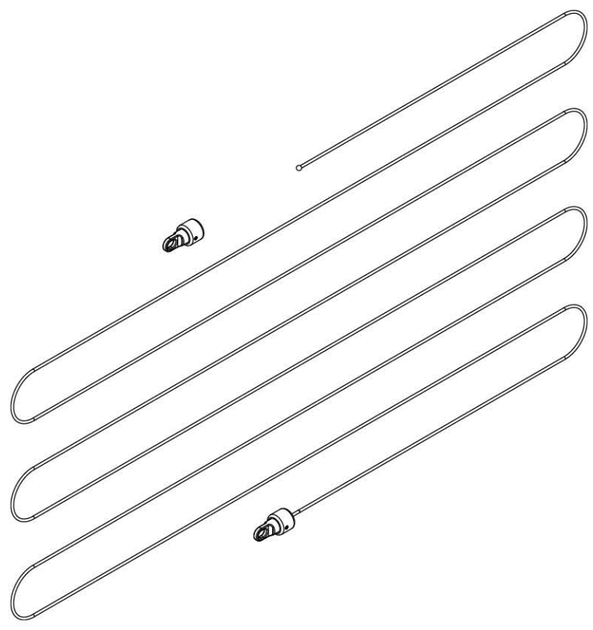

Trolley/Trolley Cable (Blue Tag)

53 Qty: **1x**

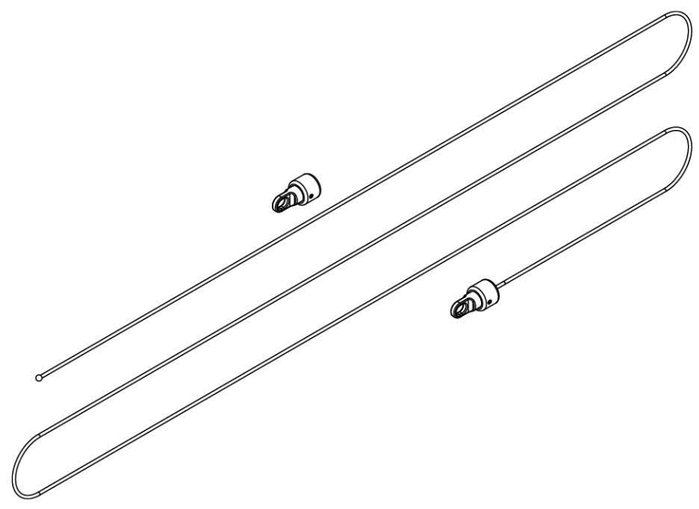

Lat Pull/Low Row Cable (Yellow Tag)

54 Qty: **2x**

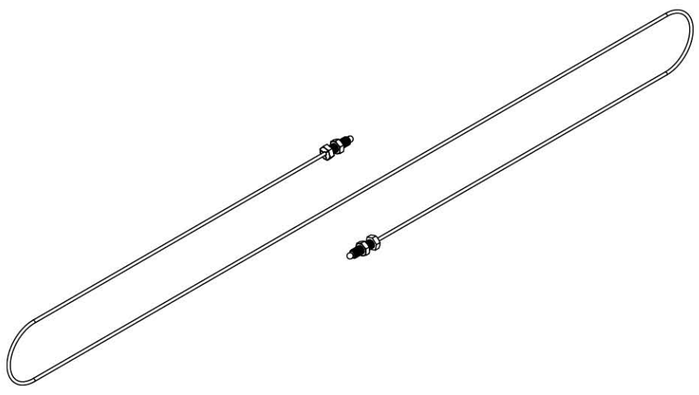

Low Side Cable (Red Tag)

55 Qty: **1x**

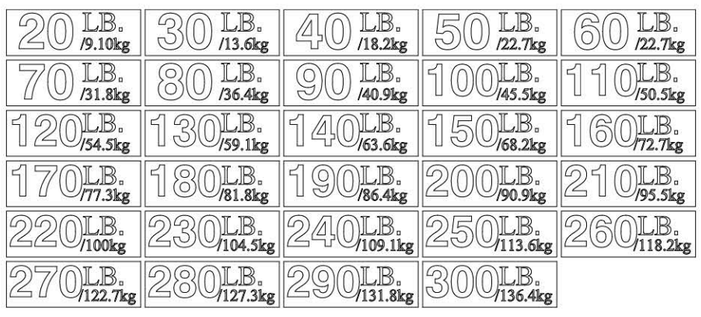

Weight Stack Number Label Sheet

56 Qty: **8x**

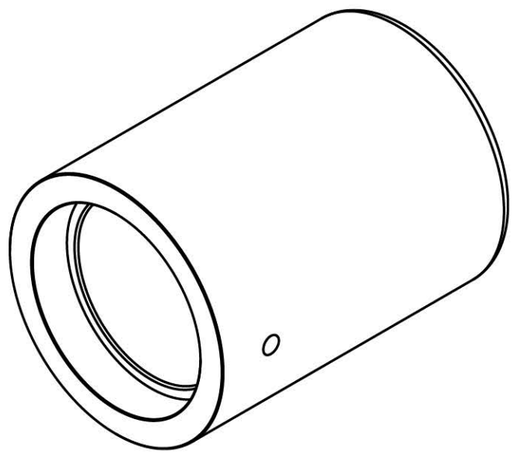

Plate Storage Spacer

57 Qty: **1x**

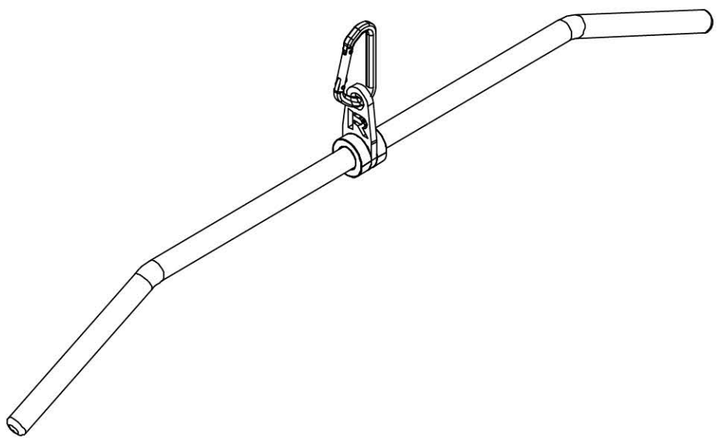

Stainless Lat Bar

58 Qty: **1x**

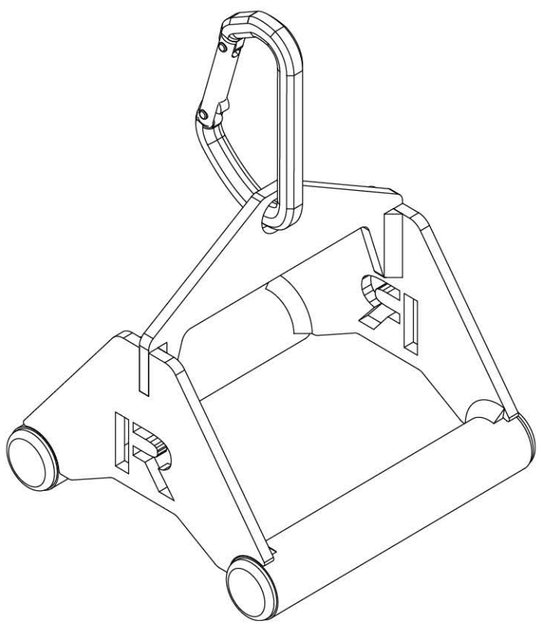

Standard Grip Triangle

59 Qty: **2x**

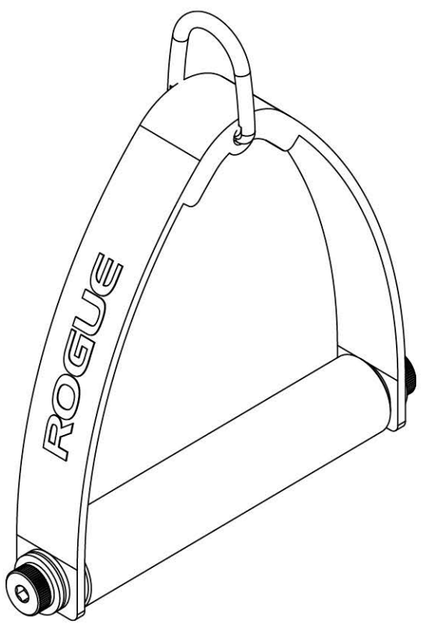

Single Handle Cable Attachment

60 Qty: **2x**

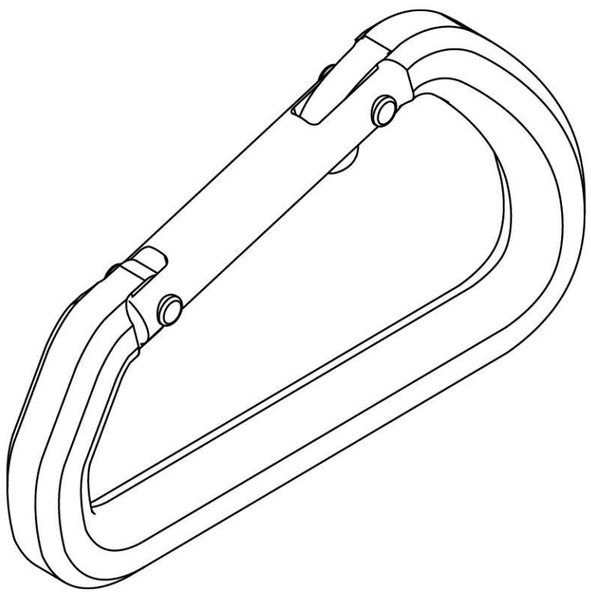

D Carabiner

61 Qty: **2x**

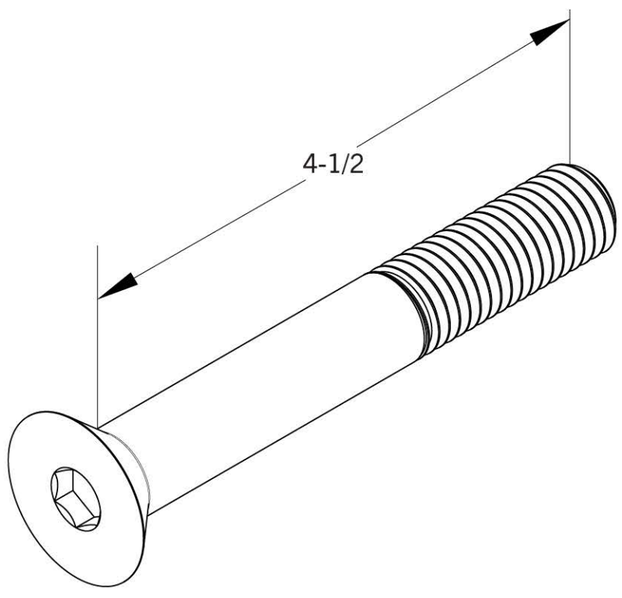

5/8” x 4-1/2” Hex Flat Head Screw

62 Qty: **2x**

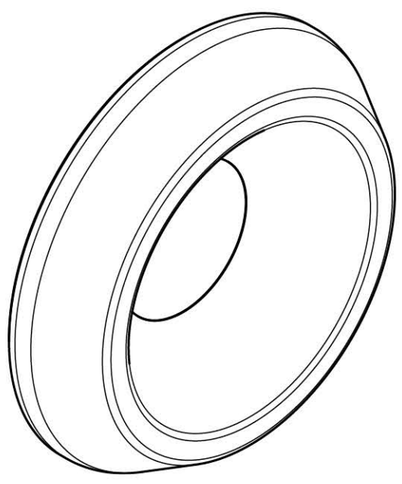

5/8” Machined Washer

INCLUDED PARTS: FML-6 ADD-ON KIT

Note: Images not shown at scale.

63 Qty: **8x**

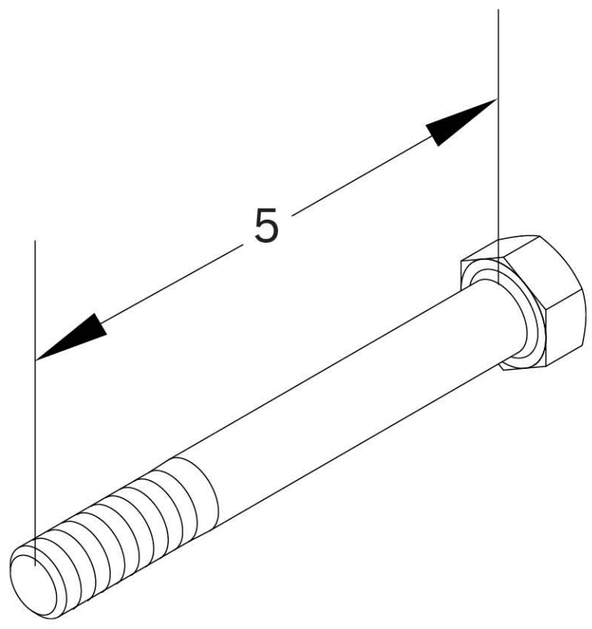

5/8” x 5” Hex Bolt

64 Qty: **23x**

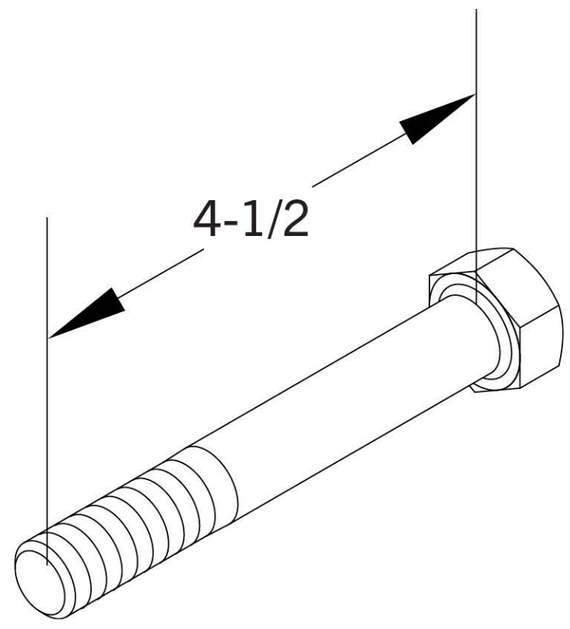

5/8” x 4-1/2” Hex Bolt

65 Qty: **18x**

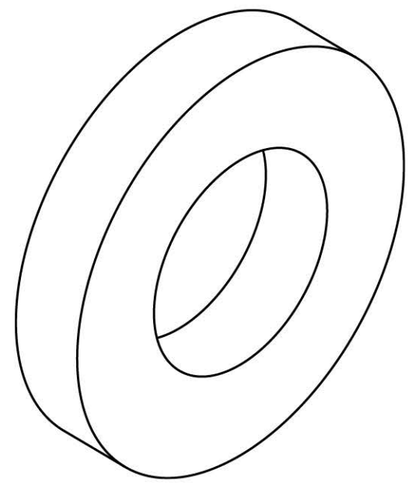

5/8” x 3/8” Pulley Bracket Spacer

66 Qty: **14x**

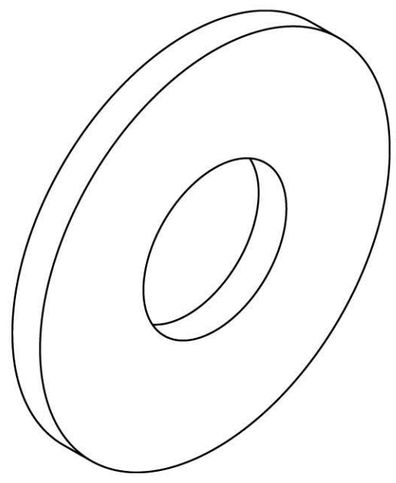

5/8” Flat Washer

67 Qty: **33x**

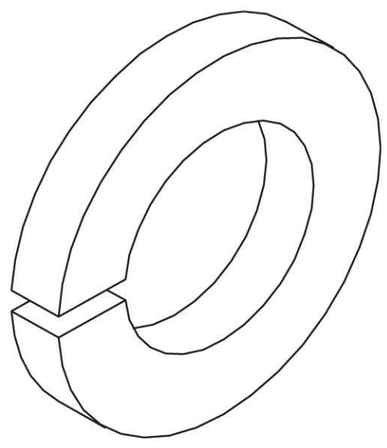

5/8” Lock Washer

68 Qty: **33x**

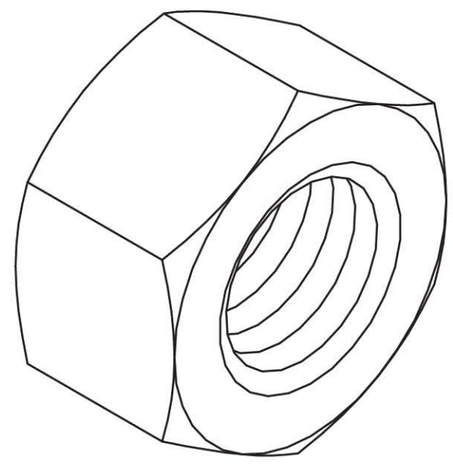

5/8” Hex Nut

69 Qty: **2x**

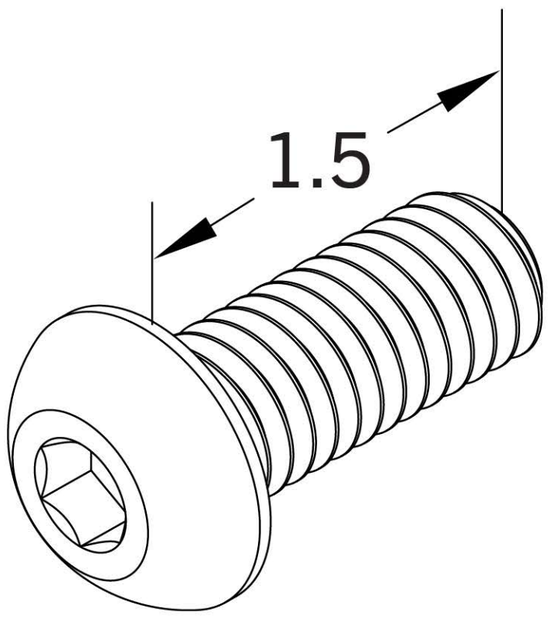

1/2” x 1-1/2” Button Head Screw

70 Qty: **2x**

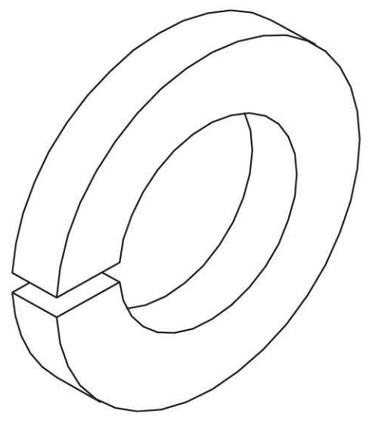

1/2” Lock Washer

71 Qty: **2x**

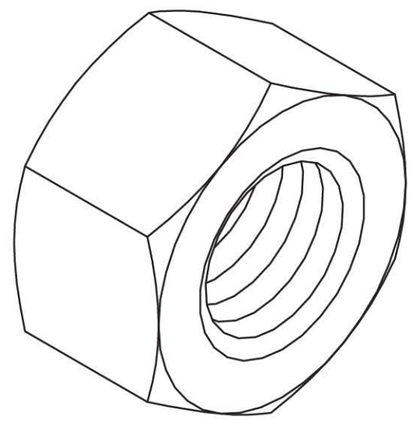

1/2” Hex Nut

72 Qty: **2x**

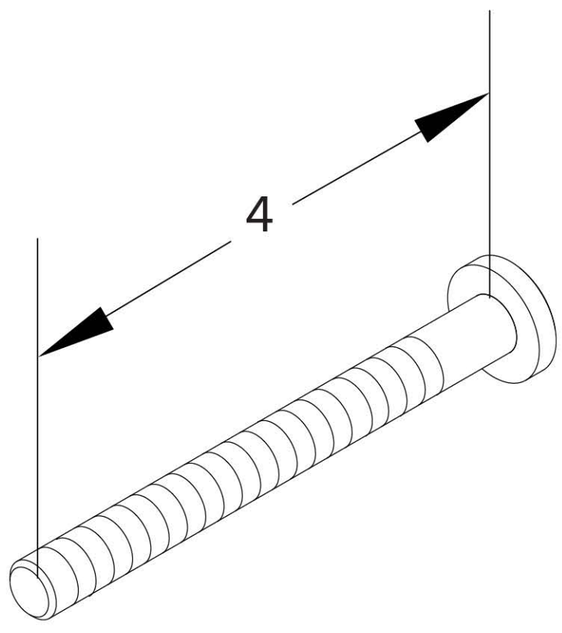

3/8” x 4” Button Head Screw

73 Qty: **4x**

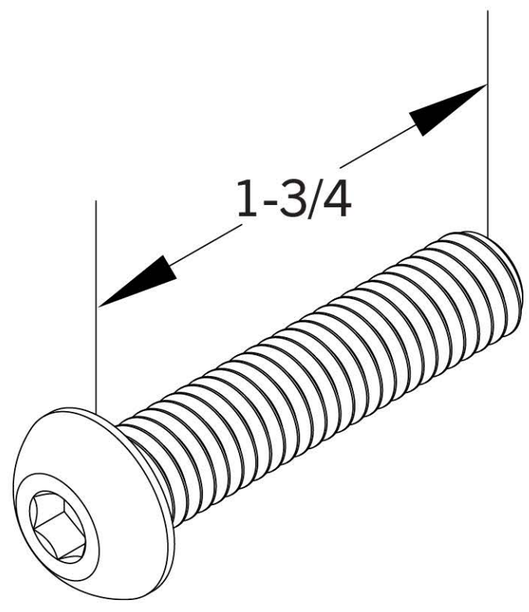

3/8” x 1-3/4” Button Head Screw

74 Qty: **6x**

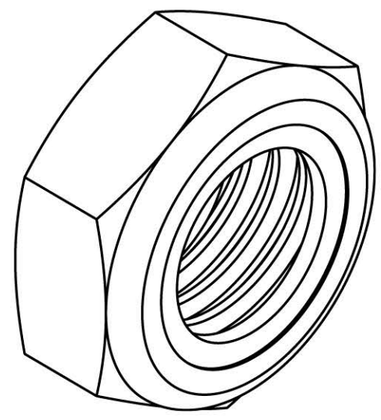

3/8” Thin Nylock Nut

INCLUDED PARTS: SHROUD KIT

Note: Images not shown at scale.

75 Qty: **1x**

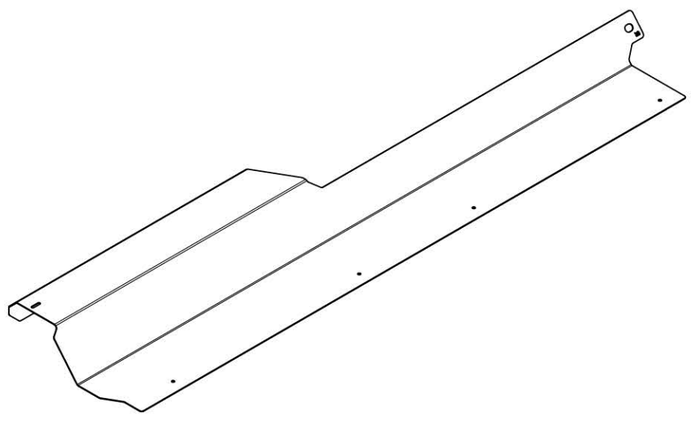

Weight Stack Shroud - RH

76 Qty: **1x**

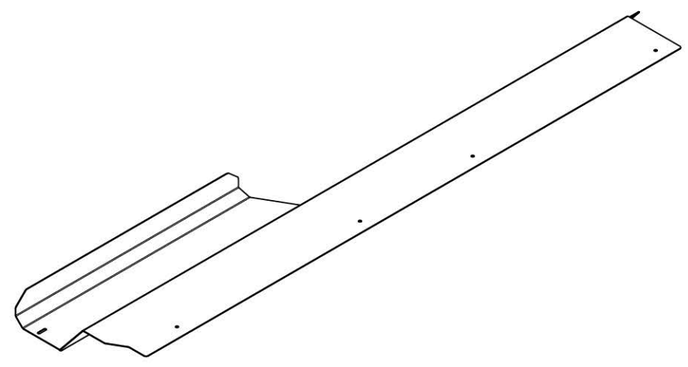

Weight Stack Shroud - LH

77 Qty: **1x**

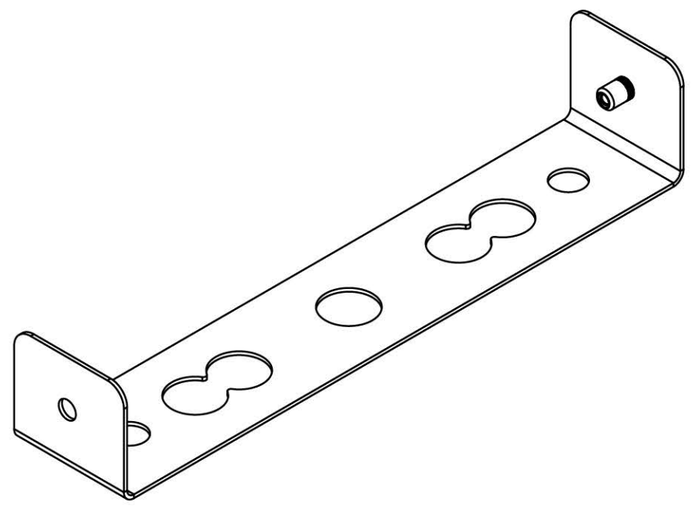

Weight Stack Shroud Bottom Bracket

78 Qty: **1x**

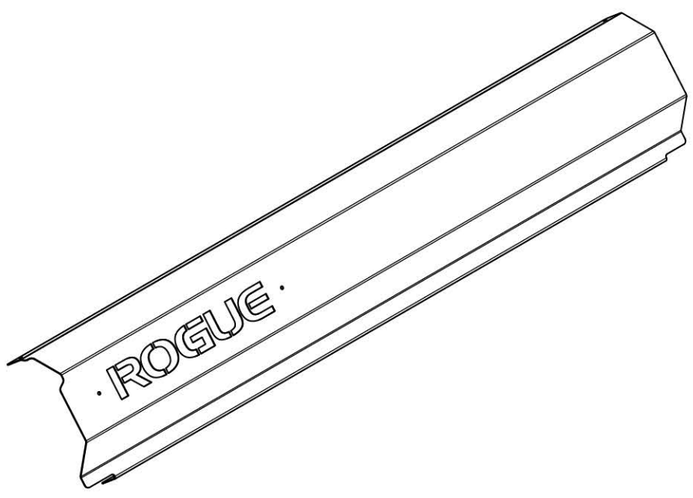

Side Shroud - RH

79 Qty: **1x**

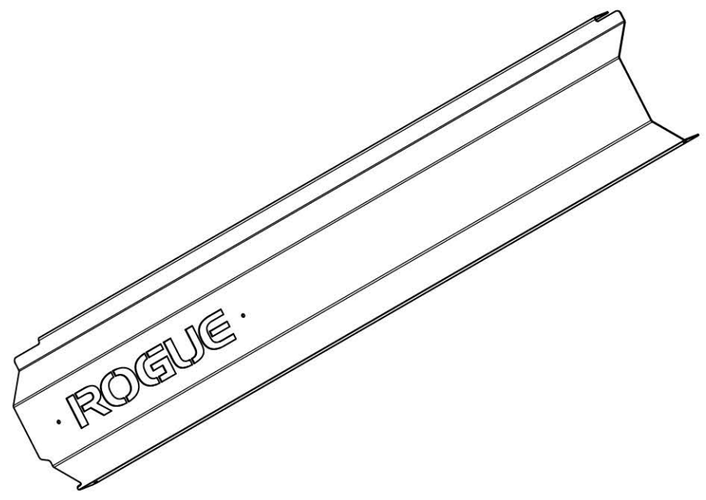

Side Shroud - LH

80 Qty: **1x**

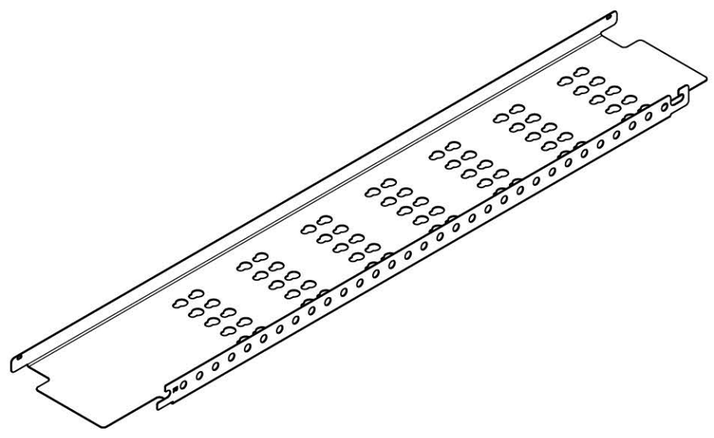

Storage Panel - RH

81 Qty: **1x**

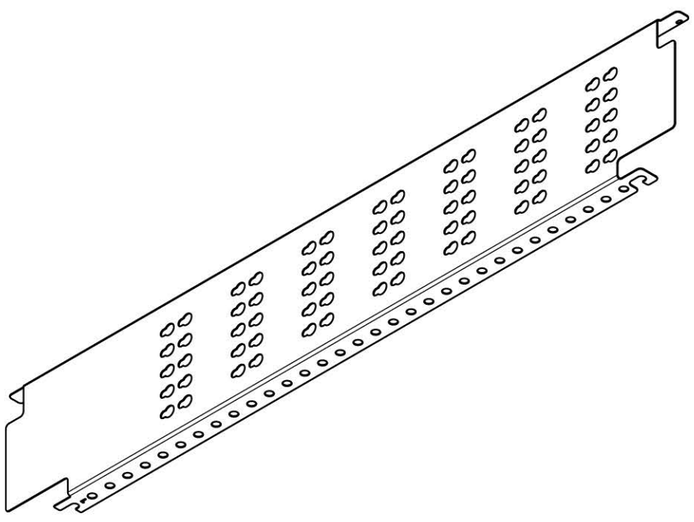

Storage Panel - LH

82 Qty: **1x**

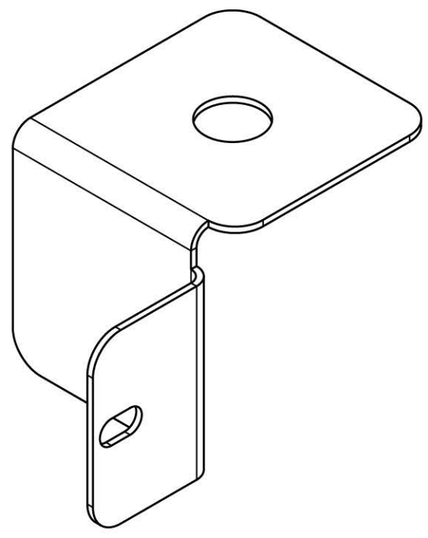

Side Shroud Top Bracket - RH

83 Qty: **1x**

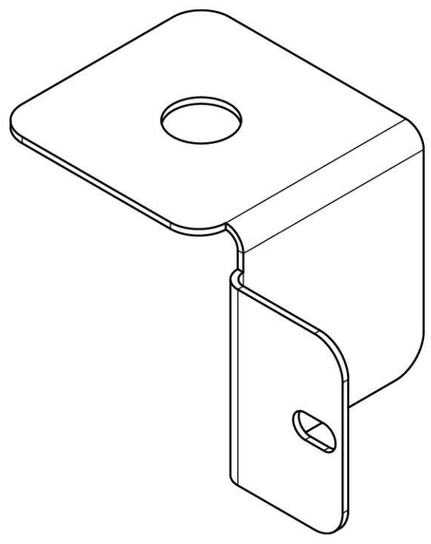

Side Shroud Top Bracket - LH

84 Qty: **1x**

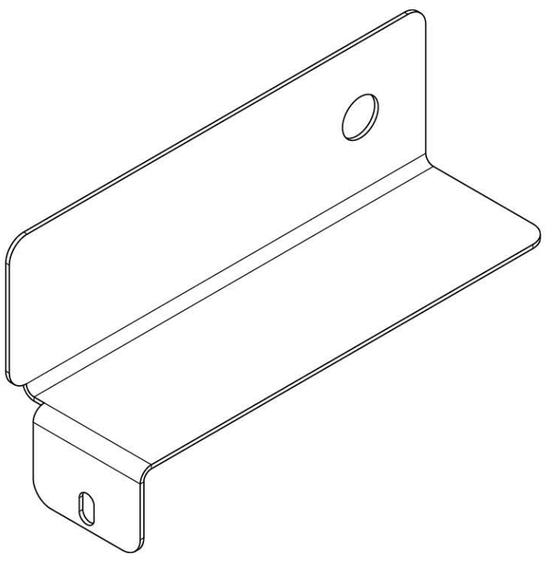

Side Shroud Bottom Bracket - RH

85 Qty: **1x**

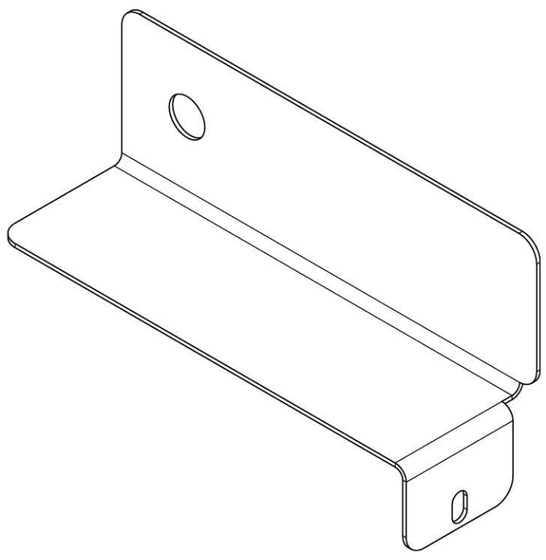

Side Shroud Bottom Bracket - LH

86 Qty: **6x**

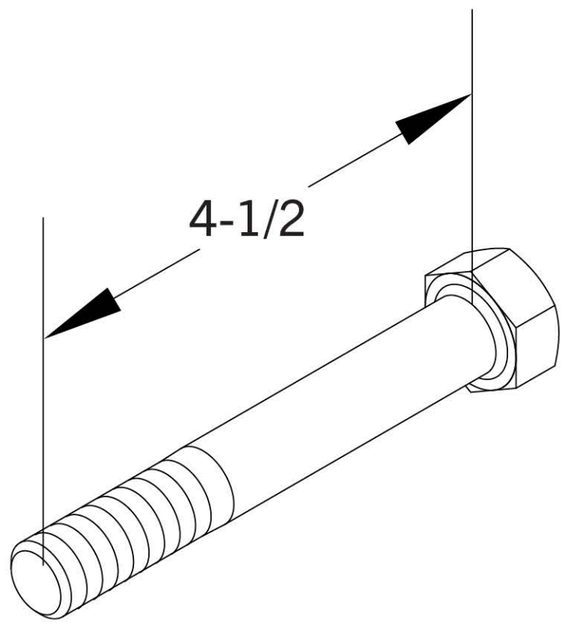

5/8” x 4-1/2” Hex Bolt

INCLUDED PARTS: SHROUD KIT

Note: Images not shown at scale.

87 Qty: **6x**

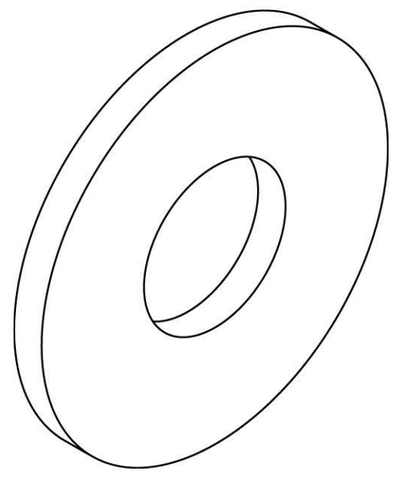

5/8” Flat Washer

88 Qty: **6x**

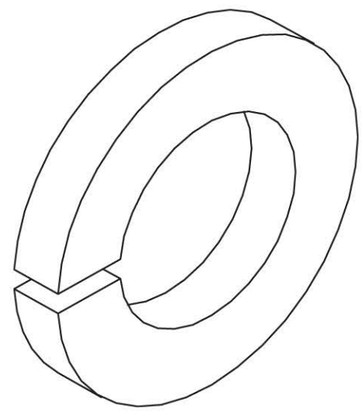

5/8” Lock Washer

89 Qty: **6x**

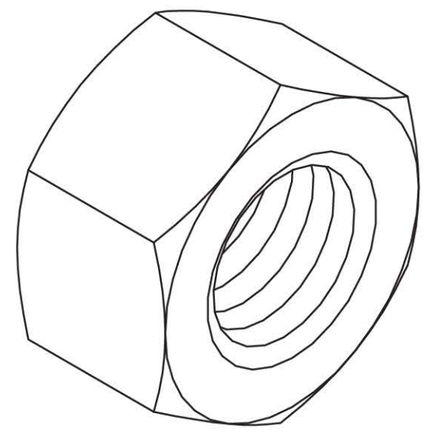

5/8” Hex Nut

90 Qty: **4x**

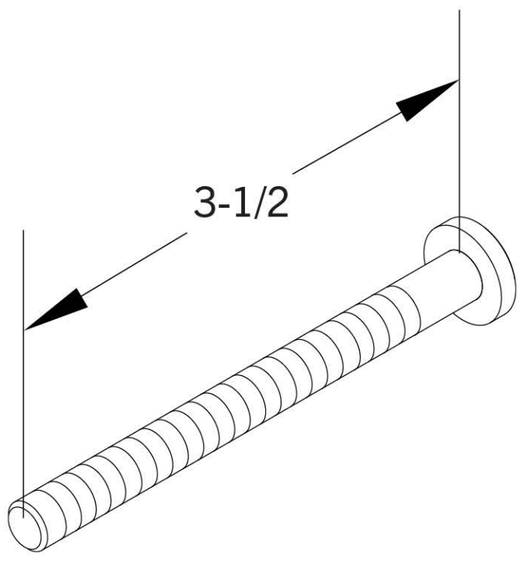

1/4” x 3-1/2” Button Head Screw

91 Qty: **6x**

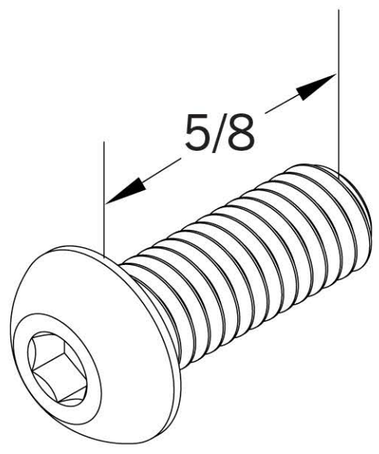

1/4” x 5/8” Button Head Screw

92 Qty: **4x**

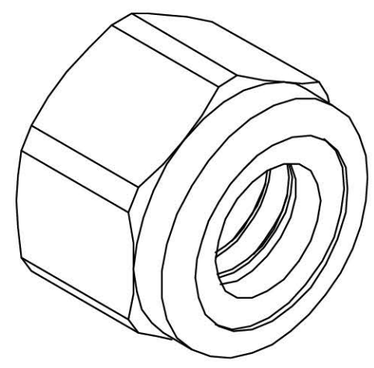

1/4” Nylock Nut

93 Qty: **4x**

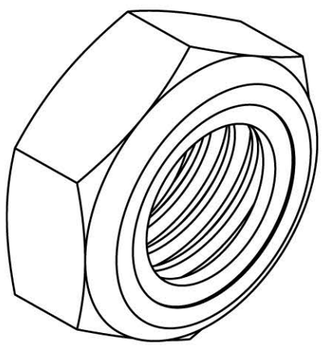

1/4” Thin Nylock Nut

STEP 1

Note:

- DO NOT use tools to tighten throughout assembly unless otherwise specified.
- If modifying existing rack with Add-on Kit, skip Steps 1-4 and proceed to **STEP 5**.
- While pulling the handle triggers, slide Swivel Trolley RH [**17**] and Swivel Trolley LH [**18**] onto two Monster Lite Uprights [**1**].
- Note the orientation of Swivel Trolleys in relation to the feet at bottom of uprights.
- Slide about halfway down Upright and release triggers to lock pop pins in place when the viewing window is showing number 40.

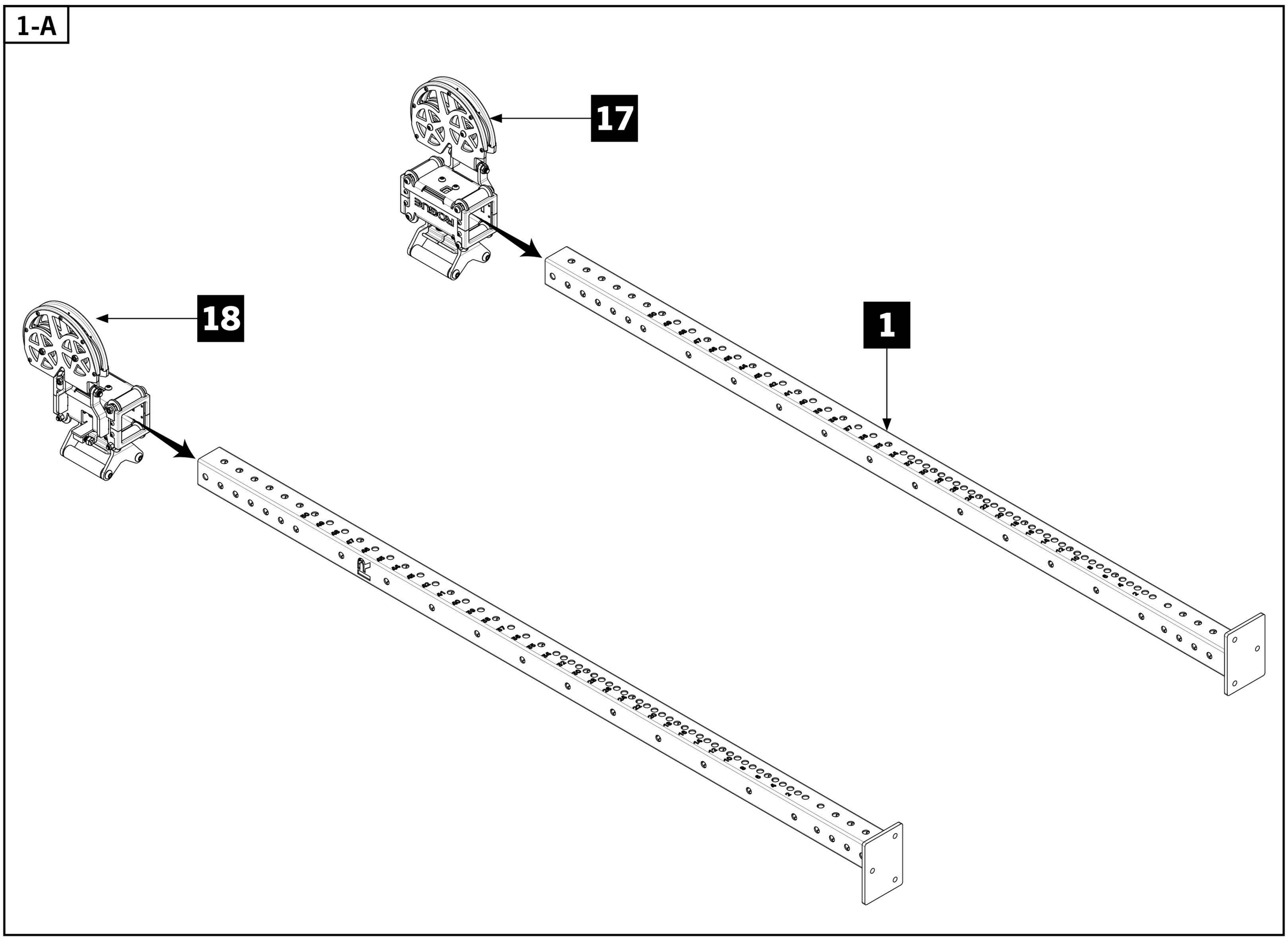

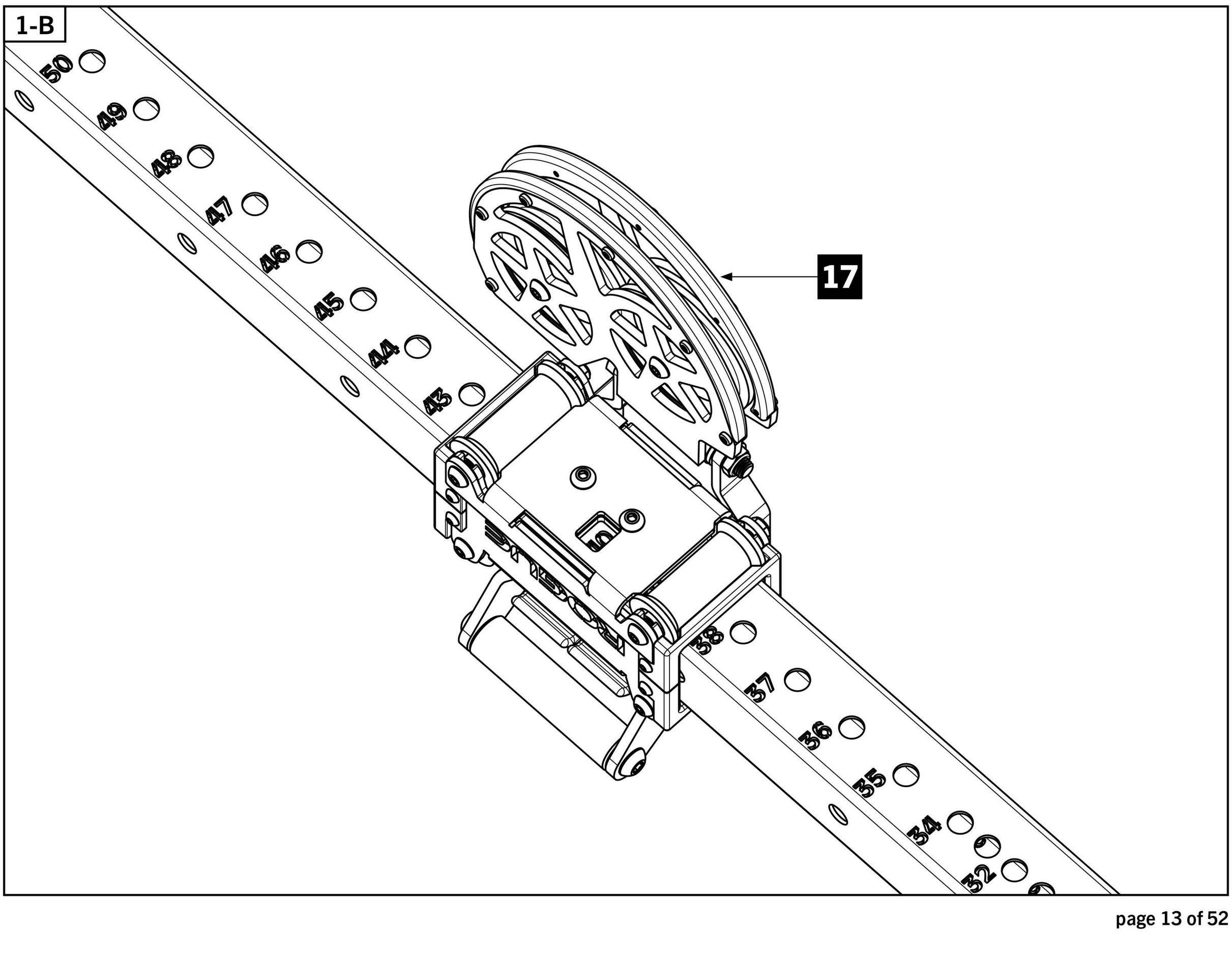

STEP 2

- Refer to overview image to plan assembly and ensure ample floor space is alloted.
- Lay down all parts on a non-abrasive surface in the orientation shown below.
- Position the footplates of uprights approximately 55” apart.
- Note orientation of Swivel Trolleys and Upright feet in relation to the ground.
- Connect Uprights to Crossmembers using 5/8”x 4-1/2” Hex Bolts [**11**], 5/8” x 5” Hex Bolts [**10**], 5/8” Flat Washers [**12**], 5/8” Lock Washers [**13**], and 5/8” Hex Nuts [**14**].
- Ensure to use 5/8” x 5” Hex Bolts [**10**] for central uprights.
- HAND-TIGHTEN ONLY. Do not use tools throughout assembly unless specified.

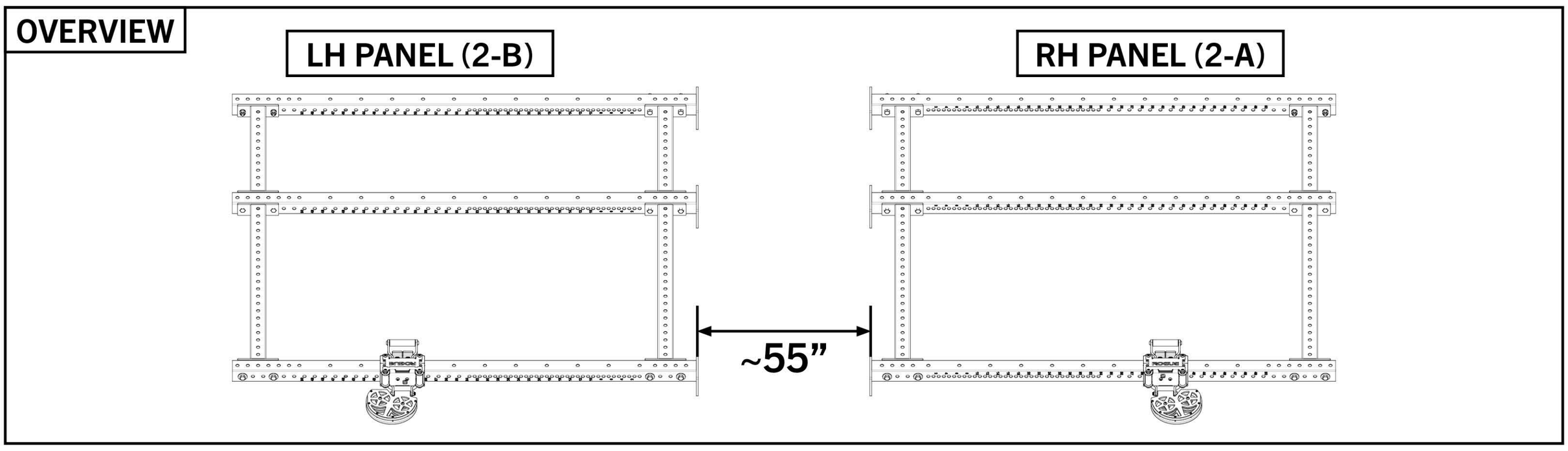

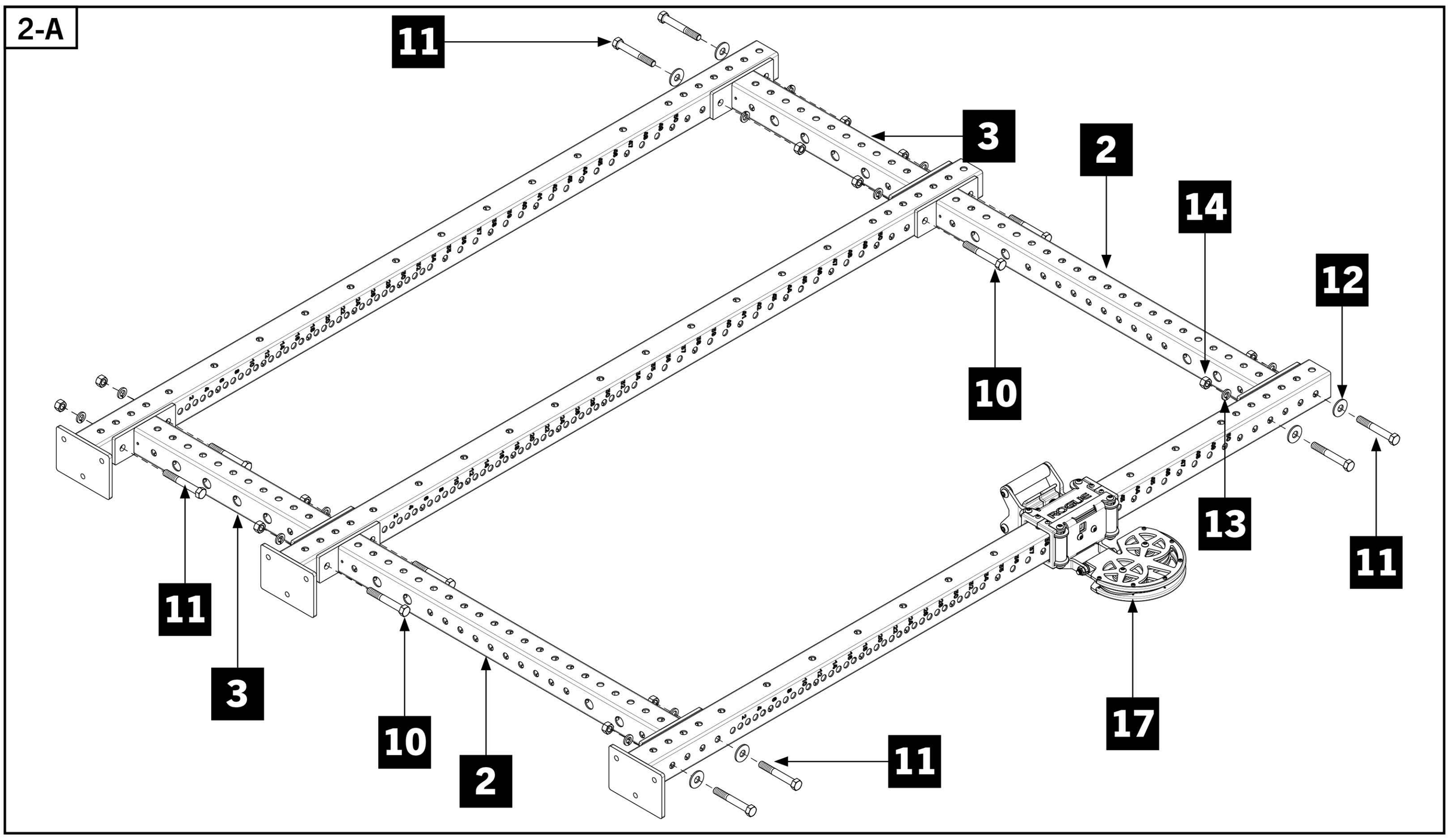

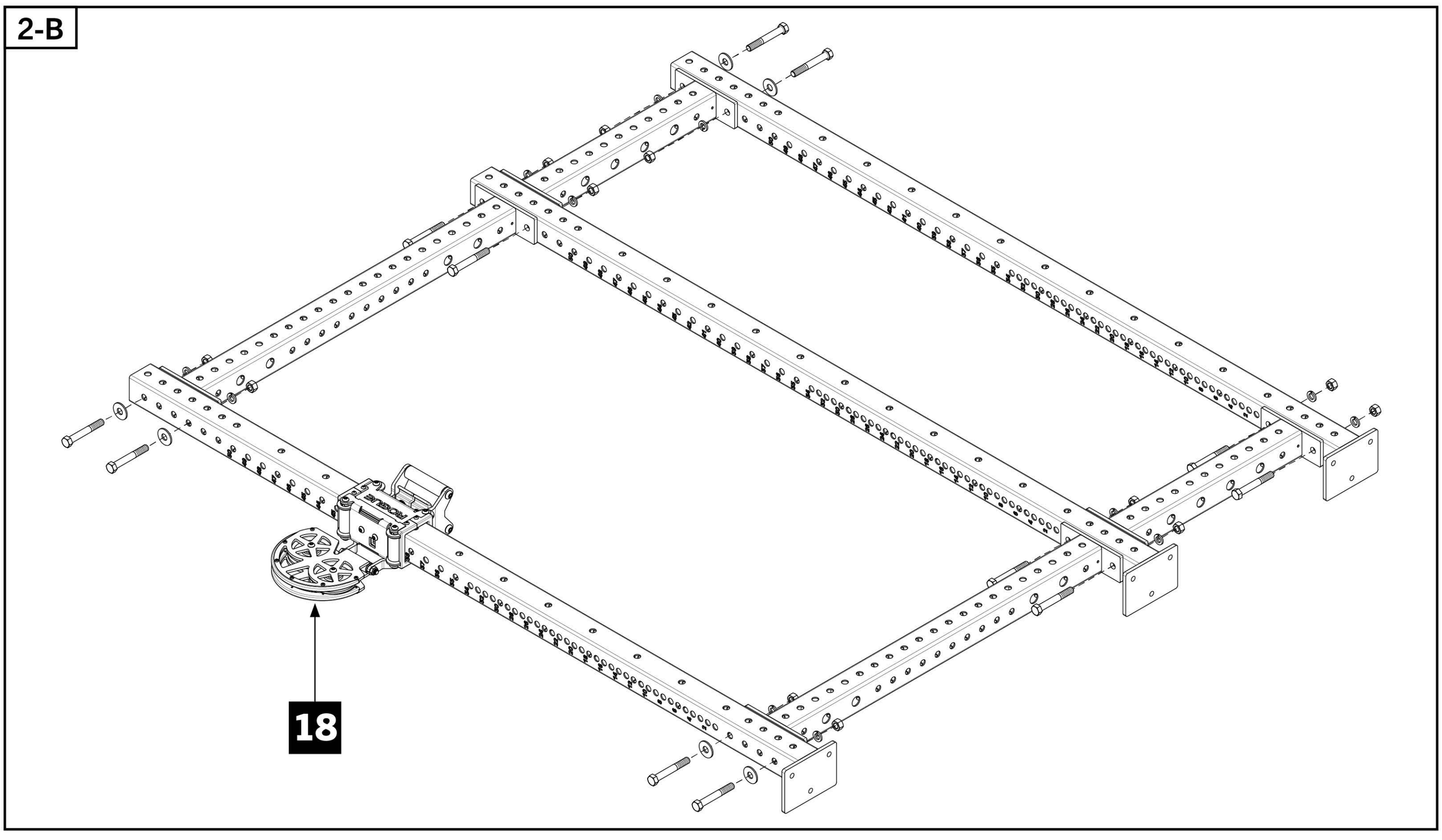

STEP 3

IMPORTANT:

- For safety, we recommend the remainder of these instructions be completed with **2 or 3 people**.
- Have two people stand one assembled panel up first.
- One person stabilizes the first panel while the other stands up the second panel.
- One or two people should stabilize both panels, ensuring panels don't fall while another person assembles the spanning Crossmembers in **STEP 4**.

OVERVIEW

LH PANEL (2-B)

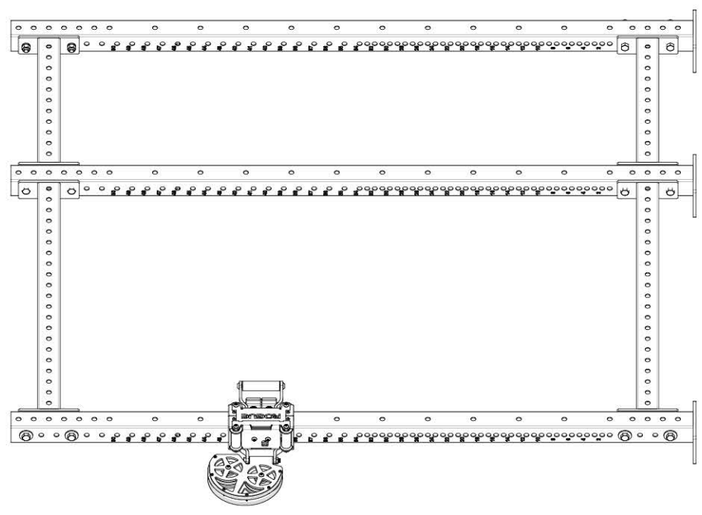

RH PANEL (2-A)

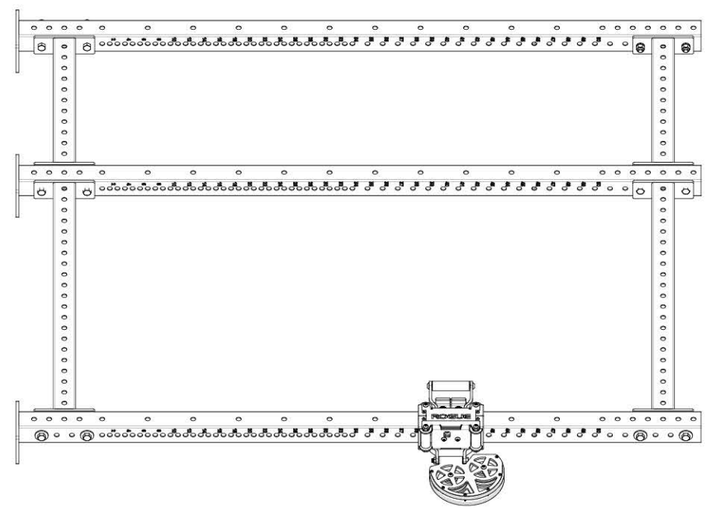

3-A

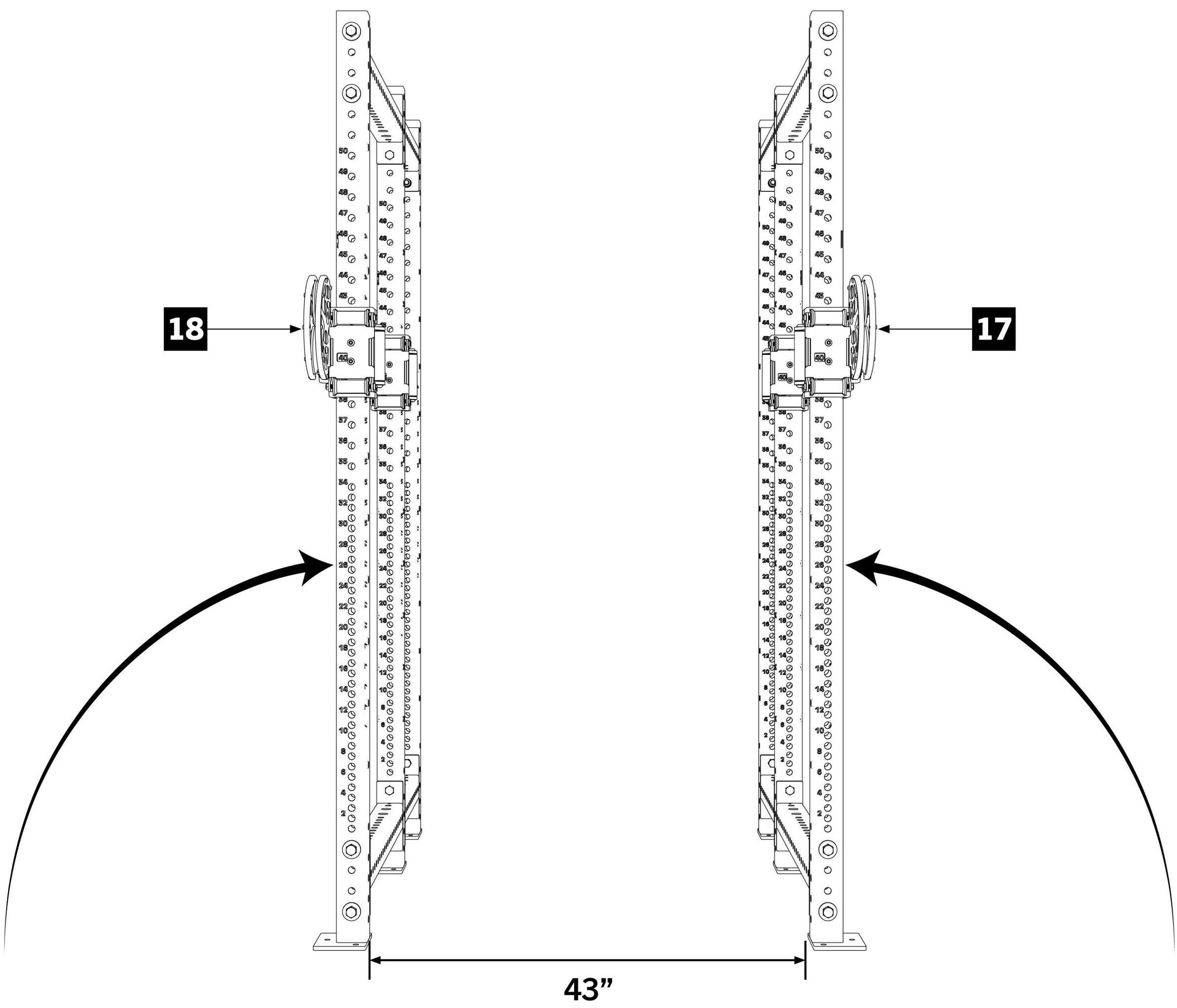

STEP 4

Tools Required:

- 3/8” Allen Key
- Attach Nameplate Crossmember [**4**] to middle Uprights using 5/8” x 4-1/2” Hex Bolt [**11**], 5/8” Flat Washers [**12**], 5/8” Lock Washers [**13**], and 5/8” Hex Nuts [**14**].
- Attach Pull-up Bar [**5**] to front Uprights using 5/8” x 4-1/2” Hex Flat Head Screw [**61**], 5/8” Machined Washer [**62**], 5/8” x 4-1/2” Hex Bolts, 5/8” Flat Washers, 5/8” Lock Washers, and 5/8” Hex Nuts.
- [!] Fully tighten 5/8” x 4-1/2” Hex Flat Head Screws using 3/8” Allen Key. DO NOT TIGHTEN HEX BOLTS.

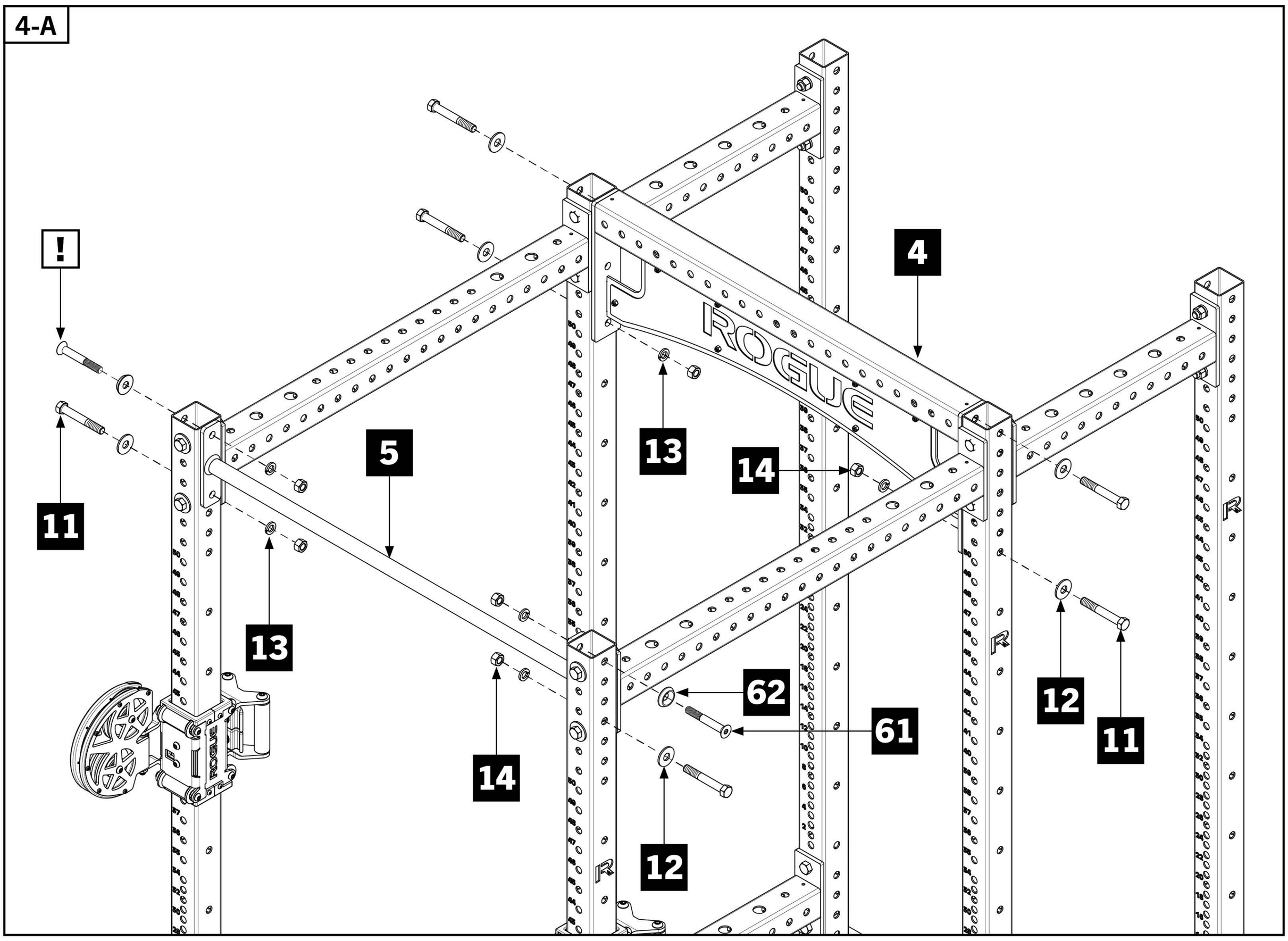

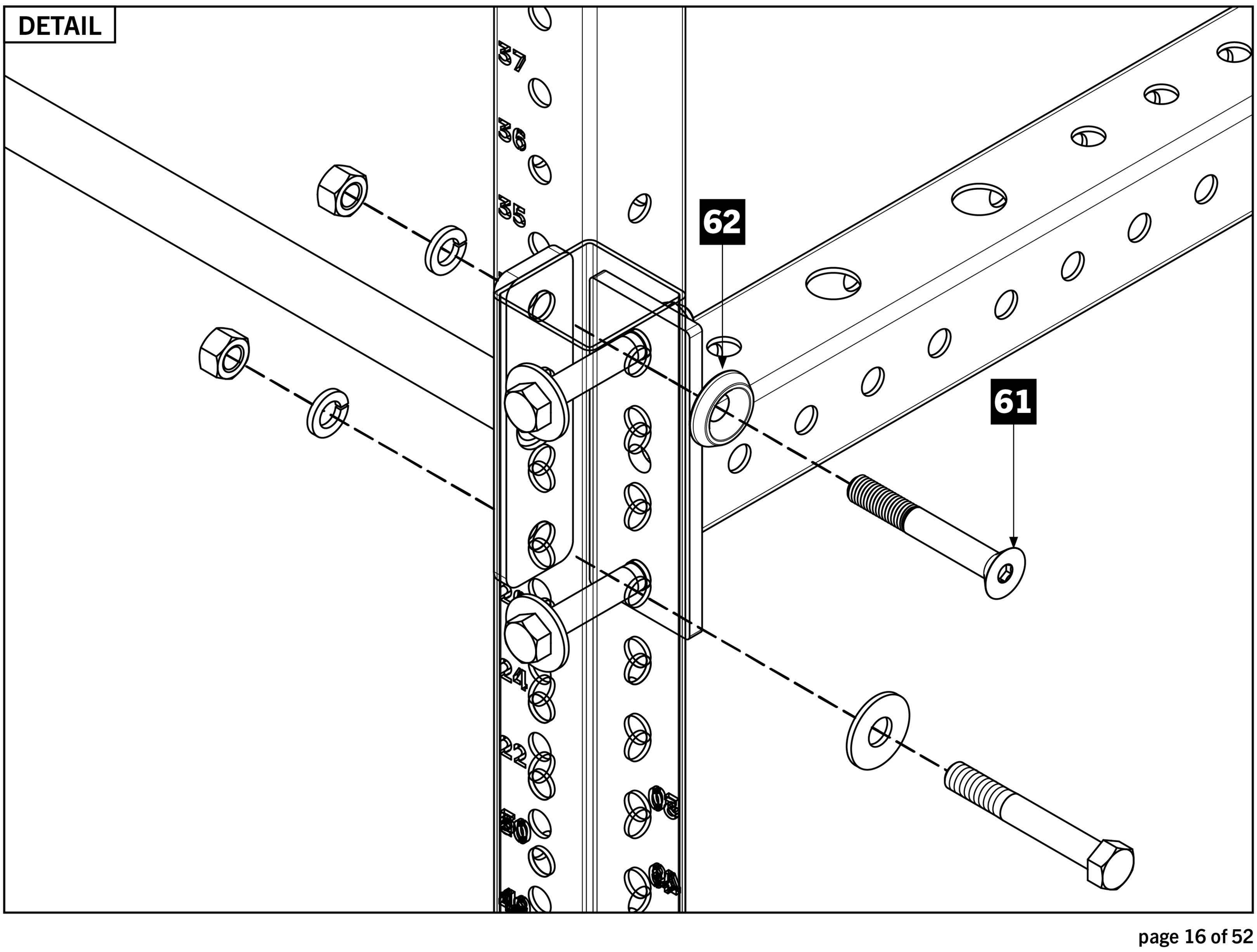

STEP 5 (BEGIN ADD-ON KIT ASSEMBLY)

- If modifying existing RML rack with add-on kit, begin following assembly instructions.
- Leaving 5/8” x 4-1/2” Hex Bolts in place, remove all four lower Lock Washers and Hex Nuts from rear Uprights as shown in **5-A**.
- Attach Low Row Crossmember [**16**] and loosely re-assemble the hardware removed above.
- [!] Ensure tube cutout is facing toward the ground.

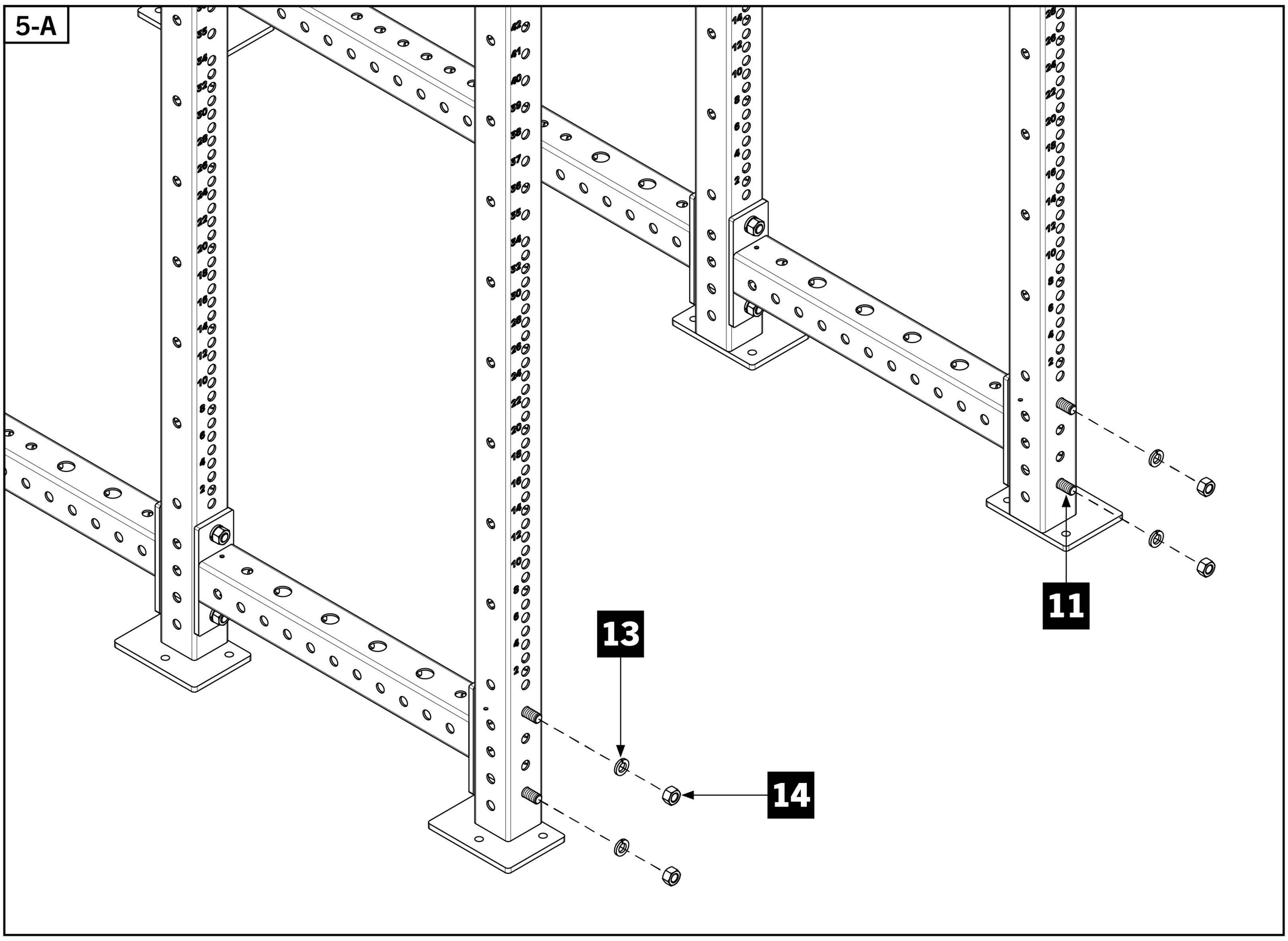

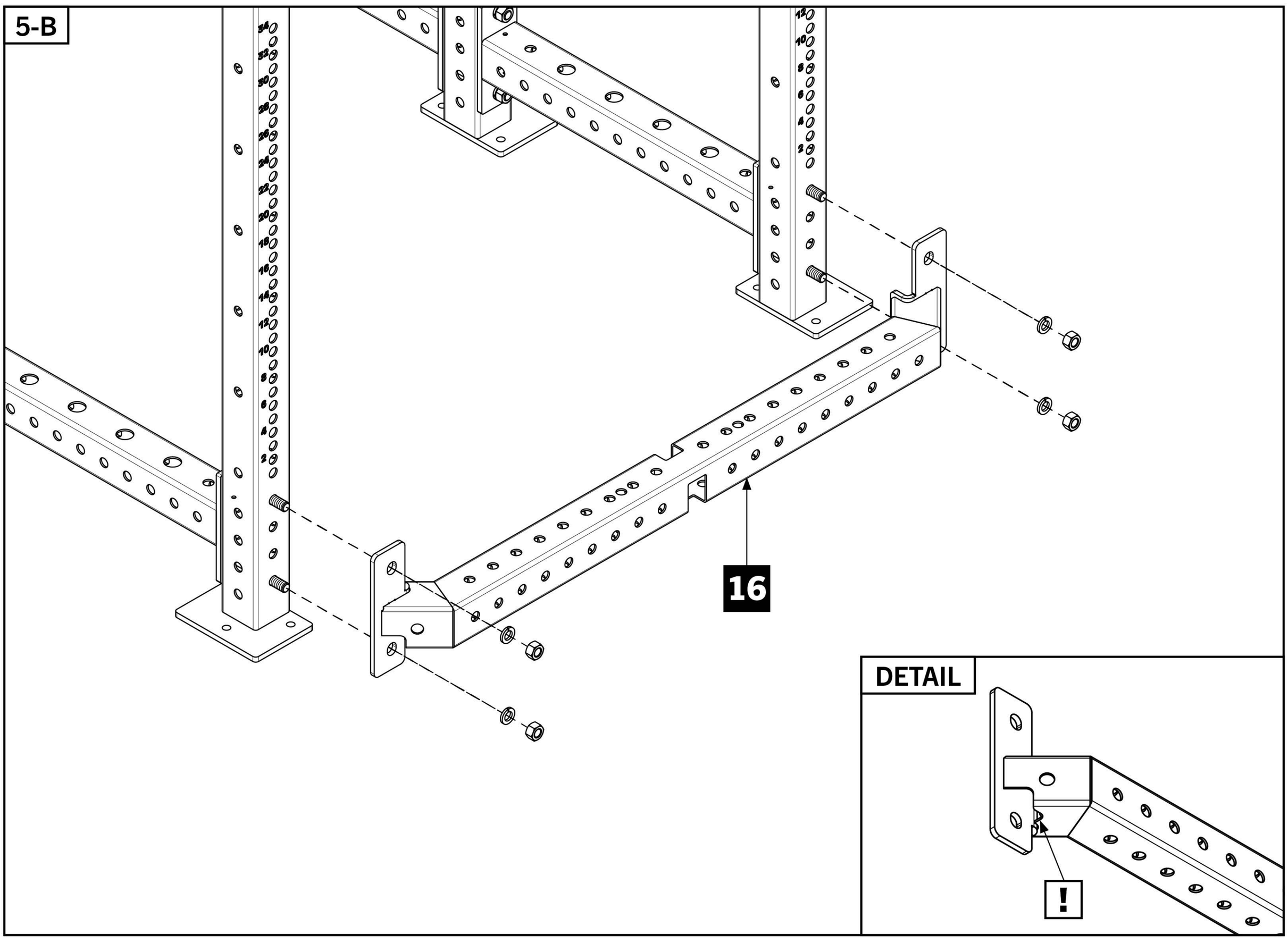

STEP 6 (ADD-ON KIT ONLY)

Tools Required:

- 15/16” Wrench
- **Important:** Loosen but do not remove **ALL** 5/8” hardware on entire rack.
- Remove Pull-up Bar and hardware from front of rack and set parts aside.
- Remove additional 5/8” crossmember hardware shown in **6-B** so that the tops of the front uprights are completely free to move.

Note:

- The tops of the front uprights will need ample slack to complete **STEP 7**. Continue to loosen hardware on bottom of Front Uprights as needed.

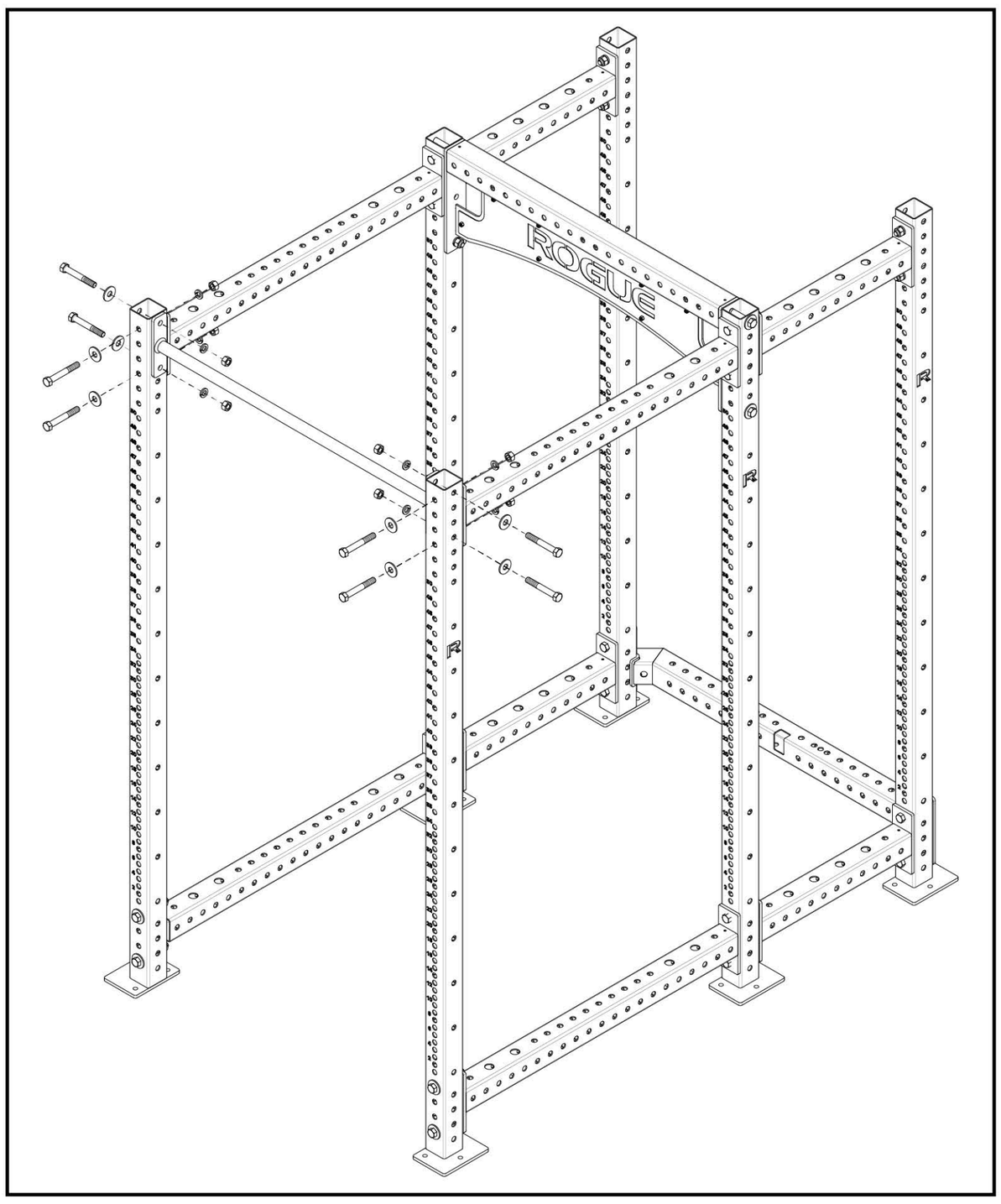

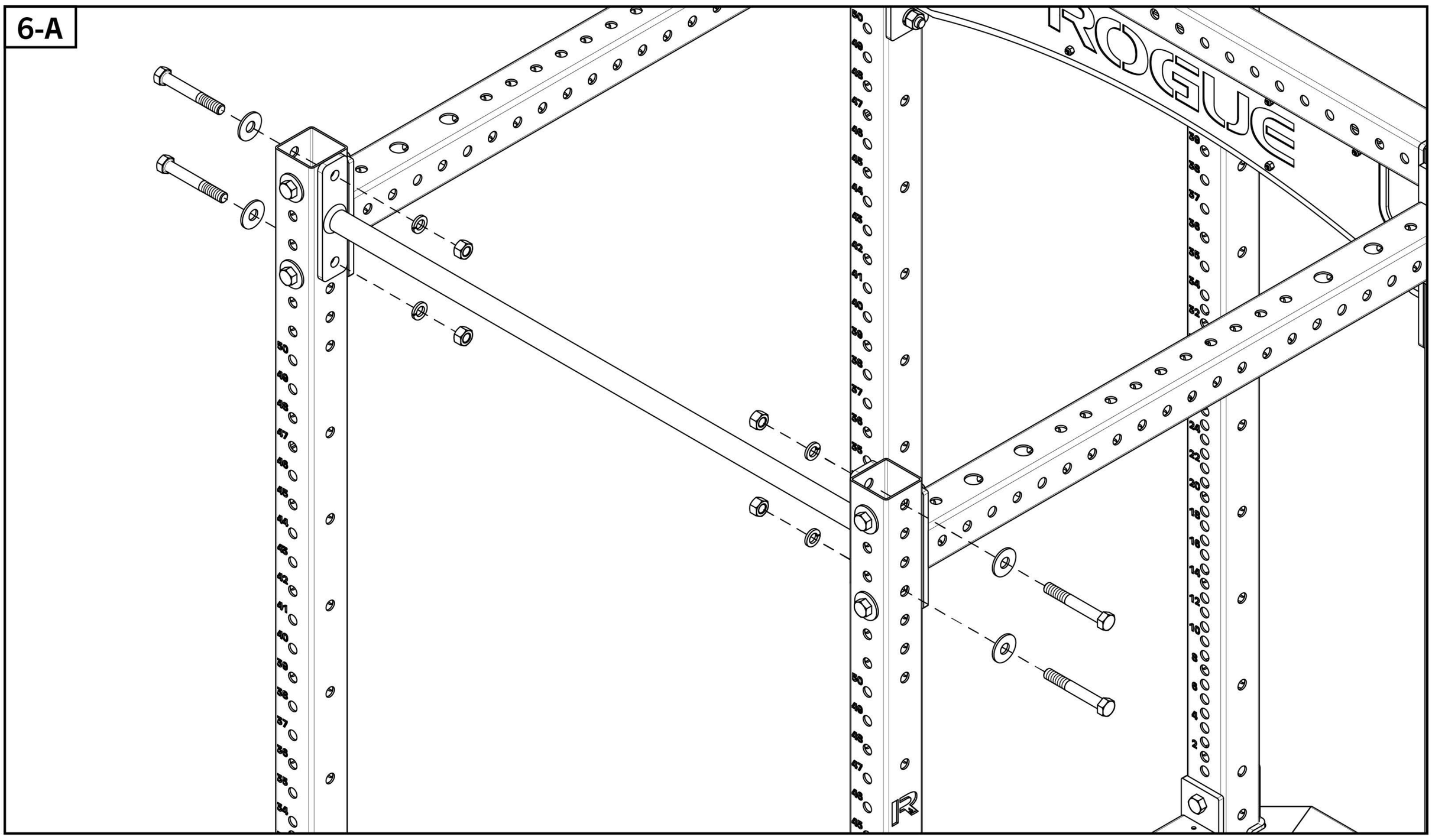

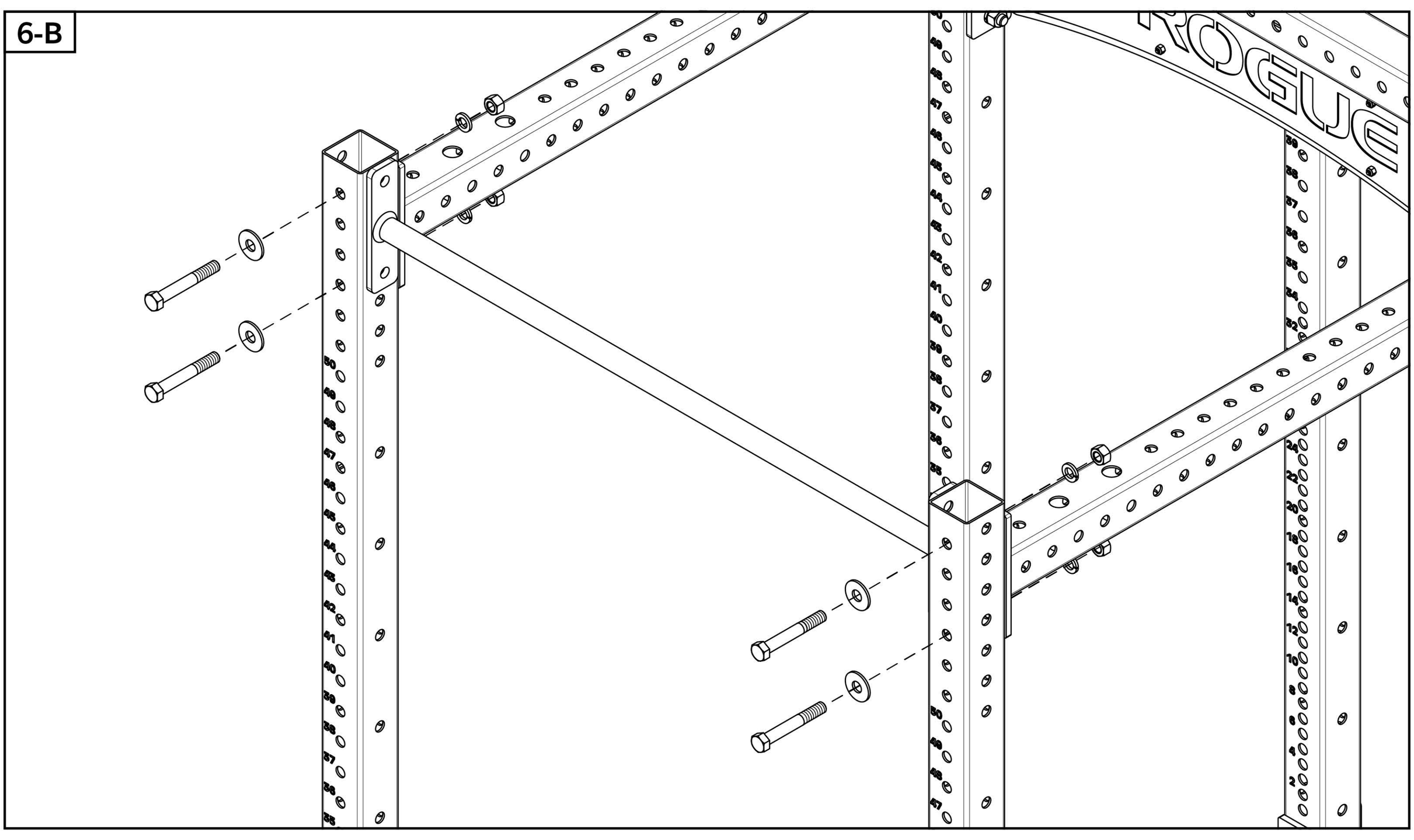

STEP 7 (ADD-ON KIT ONLY)

- While tilting Upright forward, pull the handle triggers and slide LH Swivel Trolley [**18**] down the front left Upright.
- Repeat this process to assemble RH Swivel Trolley [**17**] on front right Upright.
- Slide down the Uprights and release triggers when the viewing window is showing the number 40 (refer to **STEP 1-B**).
- Assemble hardware removed in **STEP 6**, replacing the indicated top outer bolts with 5/8” x 4-1/2” Hex Flat Head Screw [**61**] and 5/8” Machined Washer [**62**].
- [!] Fully tighten ONLY the 5/8” x 4-1/2” Hex Flat Head Screws using a 3/8” Allen Keys.

7-A

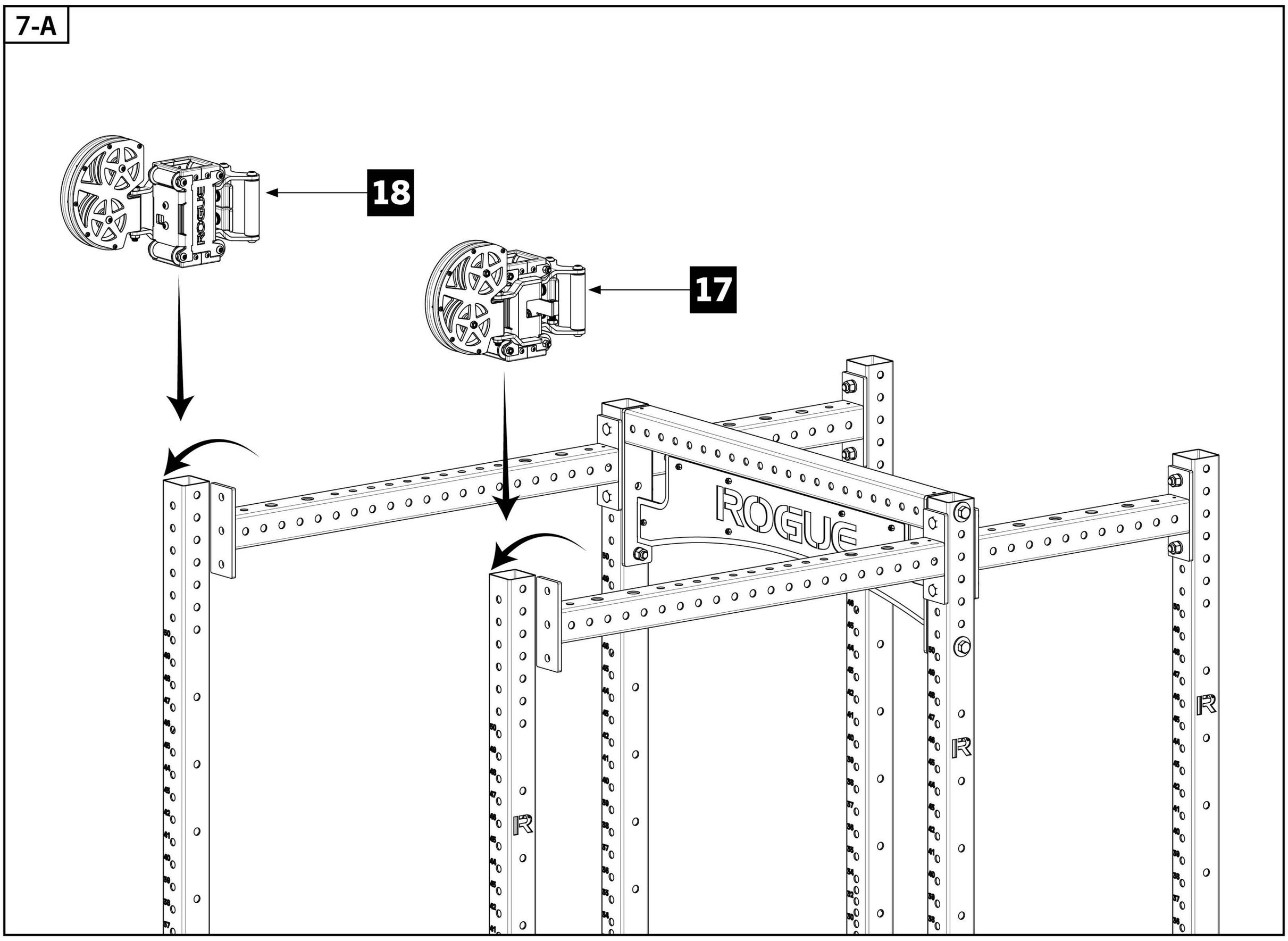

7-B

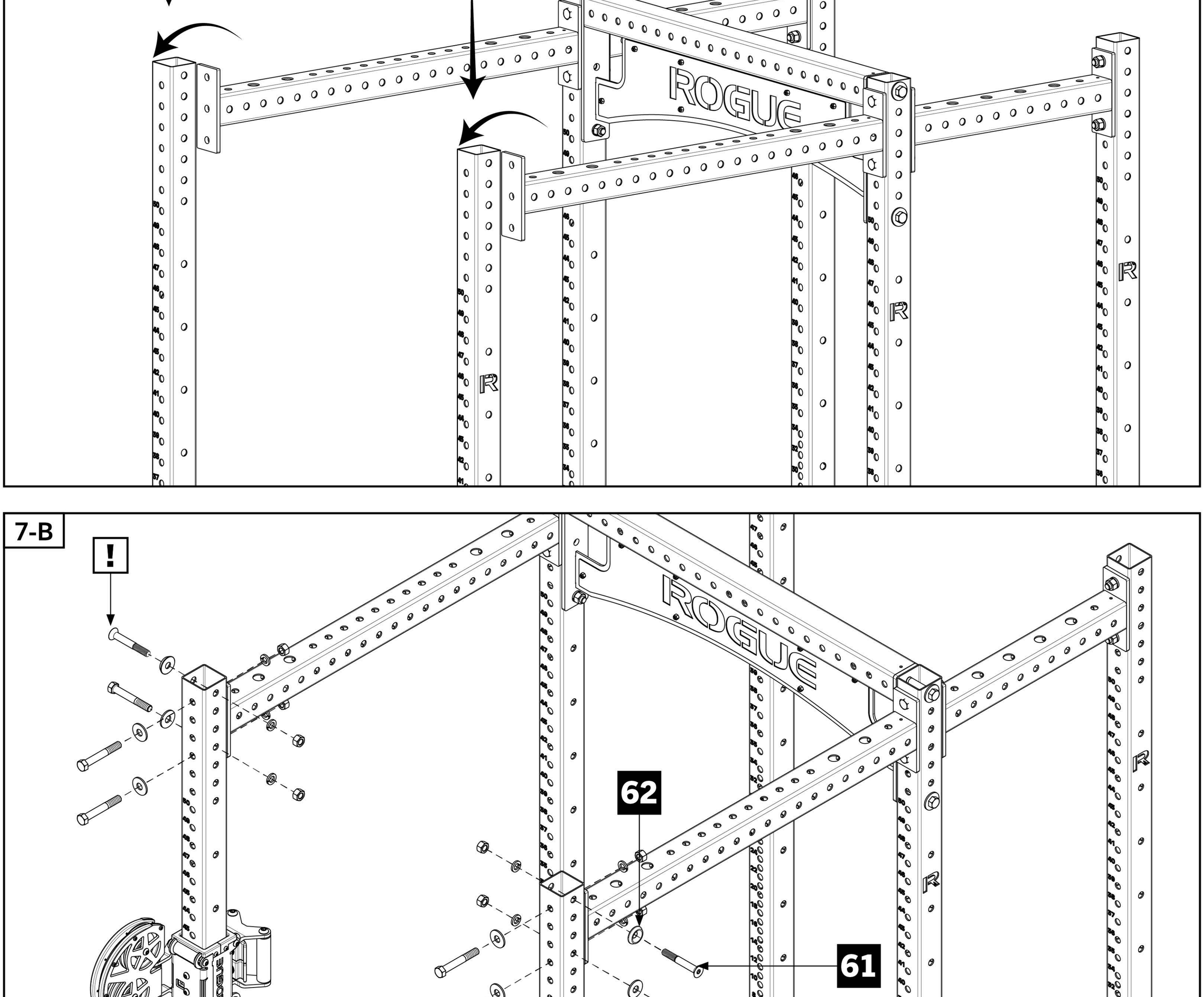

STEP 8

Tools Required:

- 7/32” Allen Key, 9/16” Wrench
- Swivel Trolleys - RH [**17**] and - LH [**18**] need to be calibrated for your specific rack.
- Keeping the Swivel Trolleys locked in place, tighten the Button Head Screws shown in **8-A** using 7/32” Allen Key until looseness or “wobble” is gone.
- Unlock pop pins and roll Trolleys up and down Upright several inches to feel tightness. If wobble persists, tighten the Screws in **8-A** again. If any friction is felt, Trolleys are too tight and Screws should be loosened a quarter turn.
- Once calibrated, tighten both rollers on rear of Trolleys using Allen Key and Wrench.

8-A

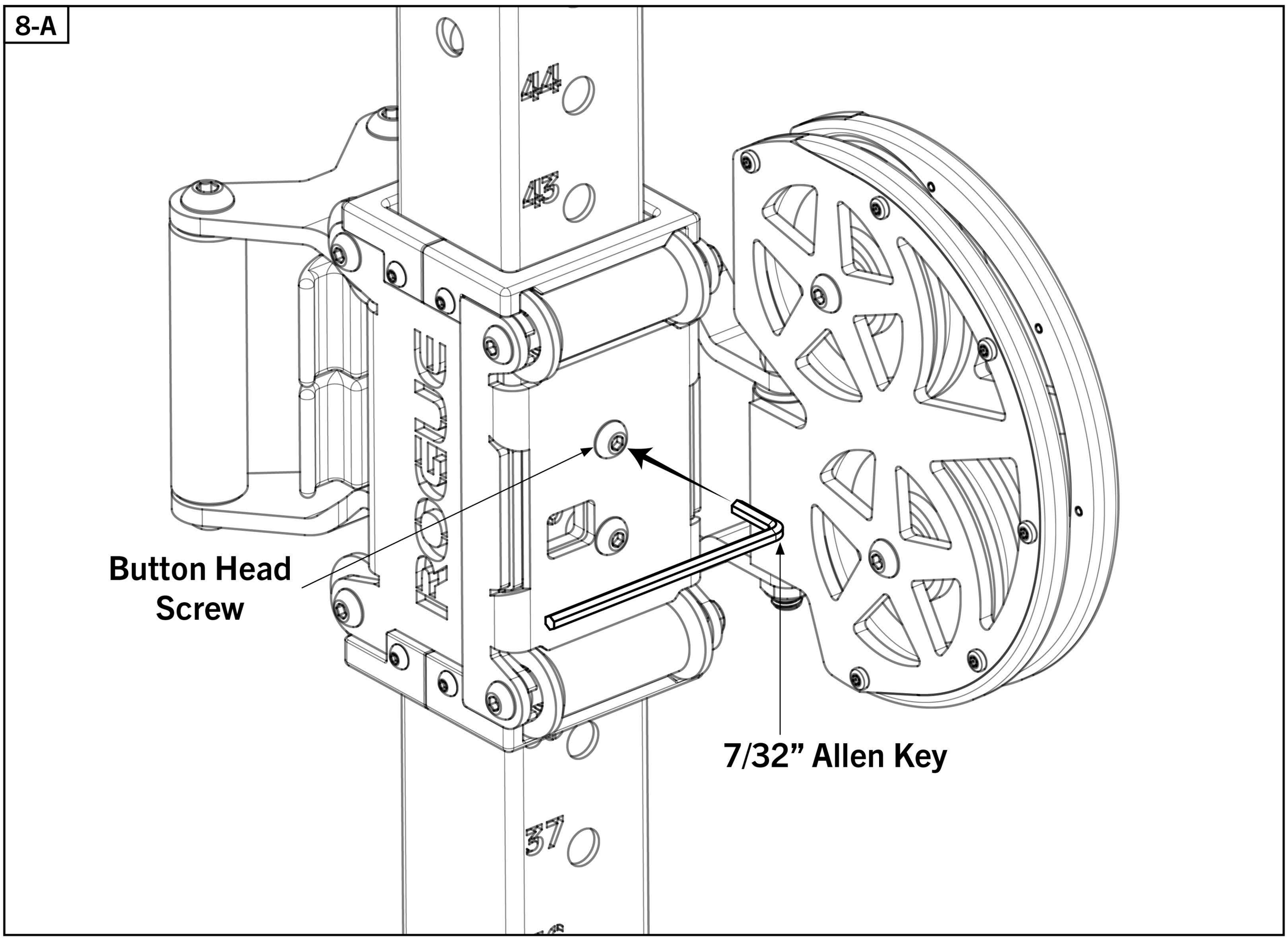

8-B

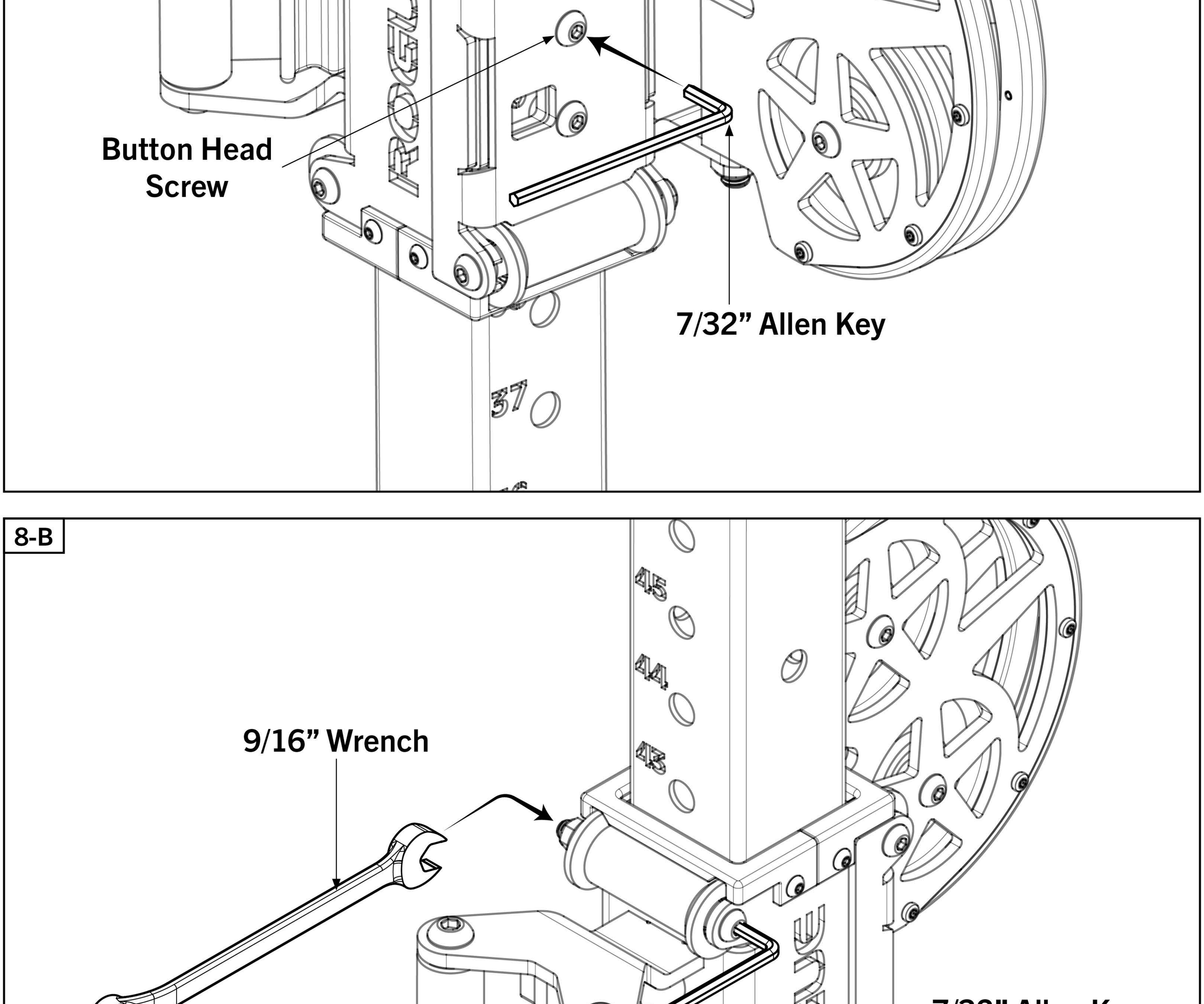

STEP 9

- For ease of assembly, pull the pop-pin and remove Foot Catch from Low Row Foot Plate Assembly as shown in detail view (right).
- Attach Foot Plate Assembly [**26**] and Low Rear Pulley Assembly [**27**] to Low Row Crossmember [**16**] using indicated 5/8” and 1/2” hardware below.

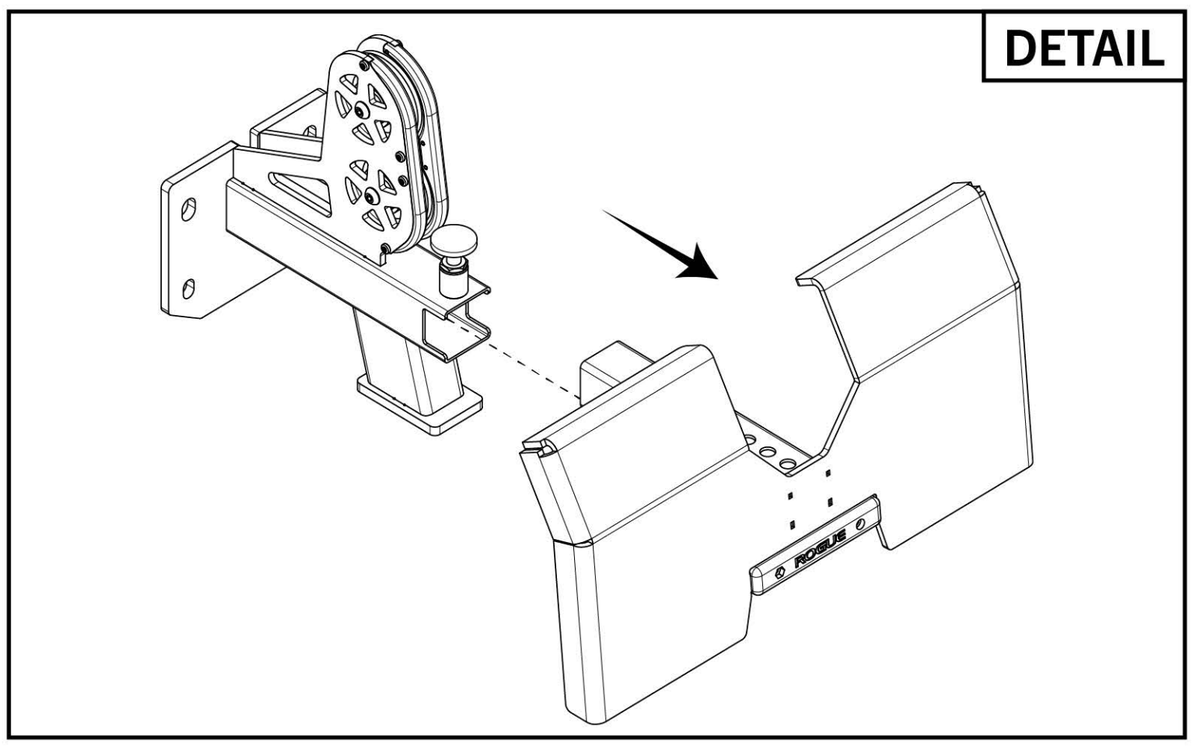

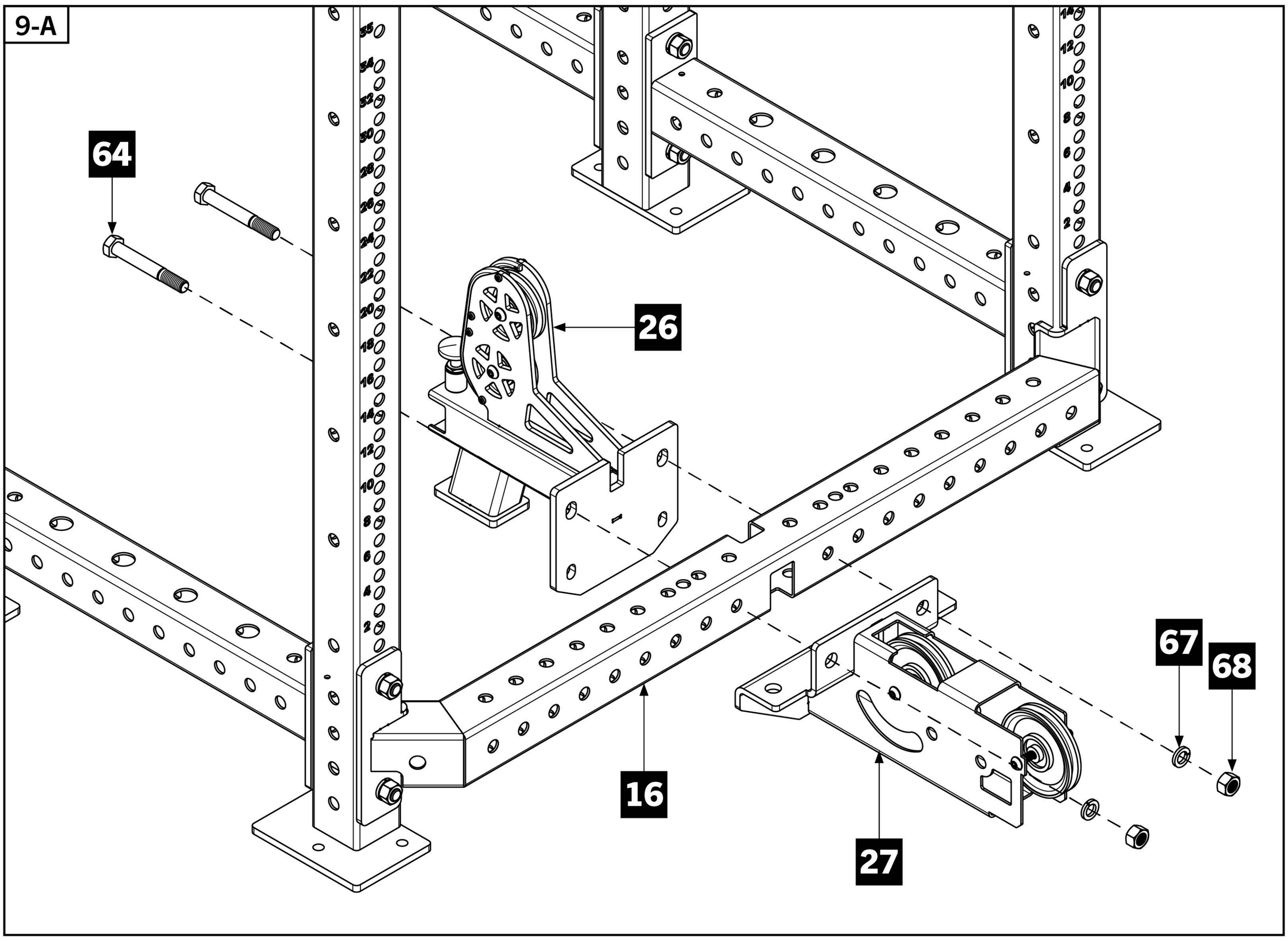

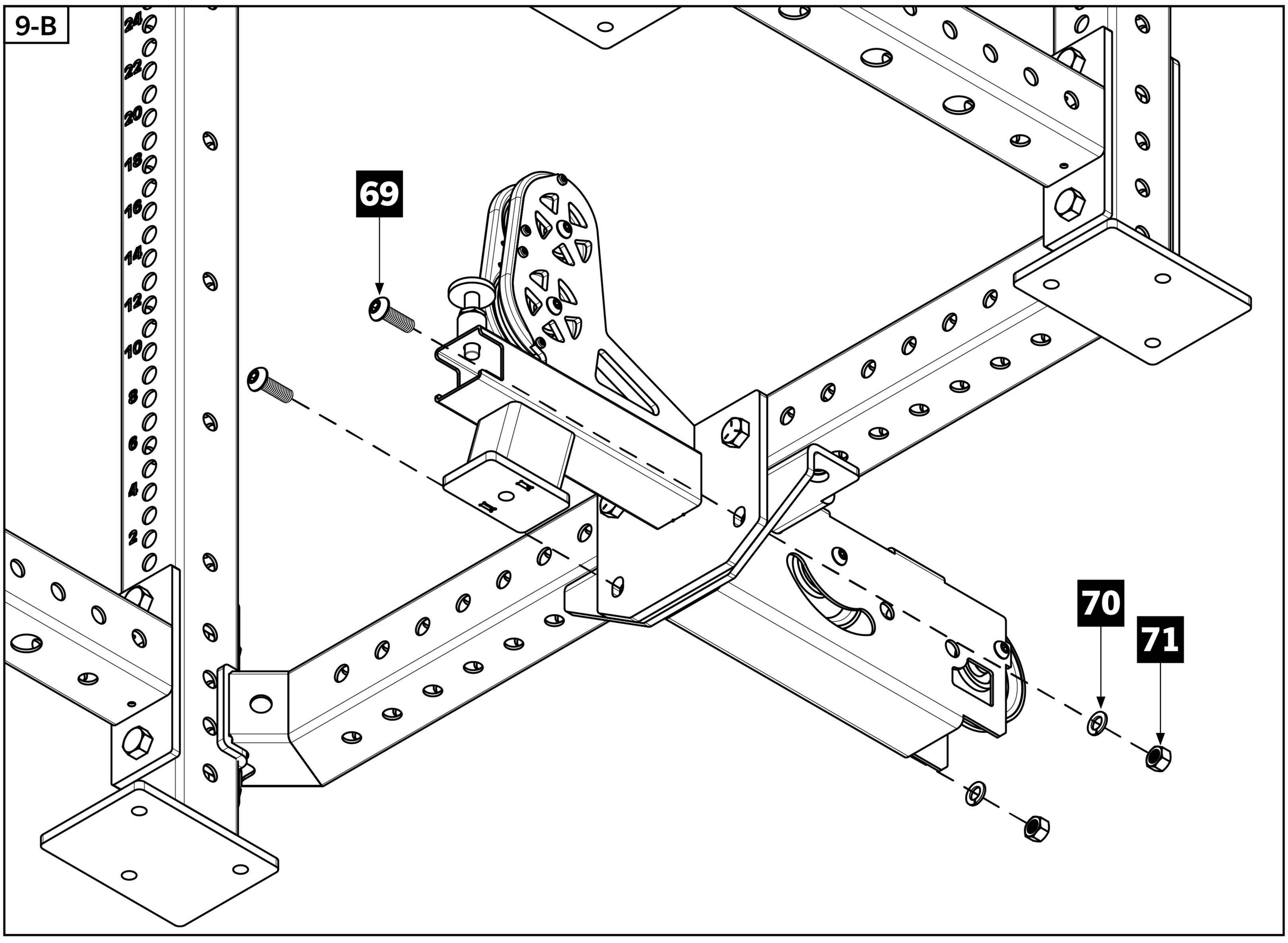

STEP 10

- Align Rear 3X3 Upright [**15**] to back of Low Rear Pulley Assembly [**27**]**.** Footplate should slide under the cutout at the bottom of Pulley Assembly.
- Secure Upright to Pulley Assembly by attaching 5/8” x 4-1/2” Hex Bolts [**64**], Rear Connector Plates [**28**], 5/8” Lock Washers [**67**], and 5/8” Hex Nuts [**68**]**.**

Note:

- Ensure Rear Connector Plates are installed with the arrow indicator stickers facing outward as shown in **10-B**.

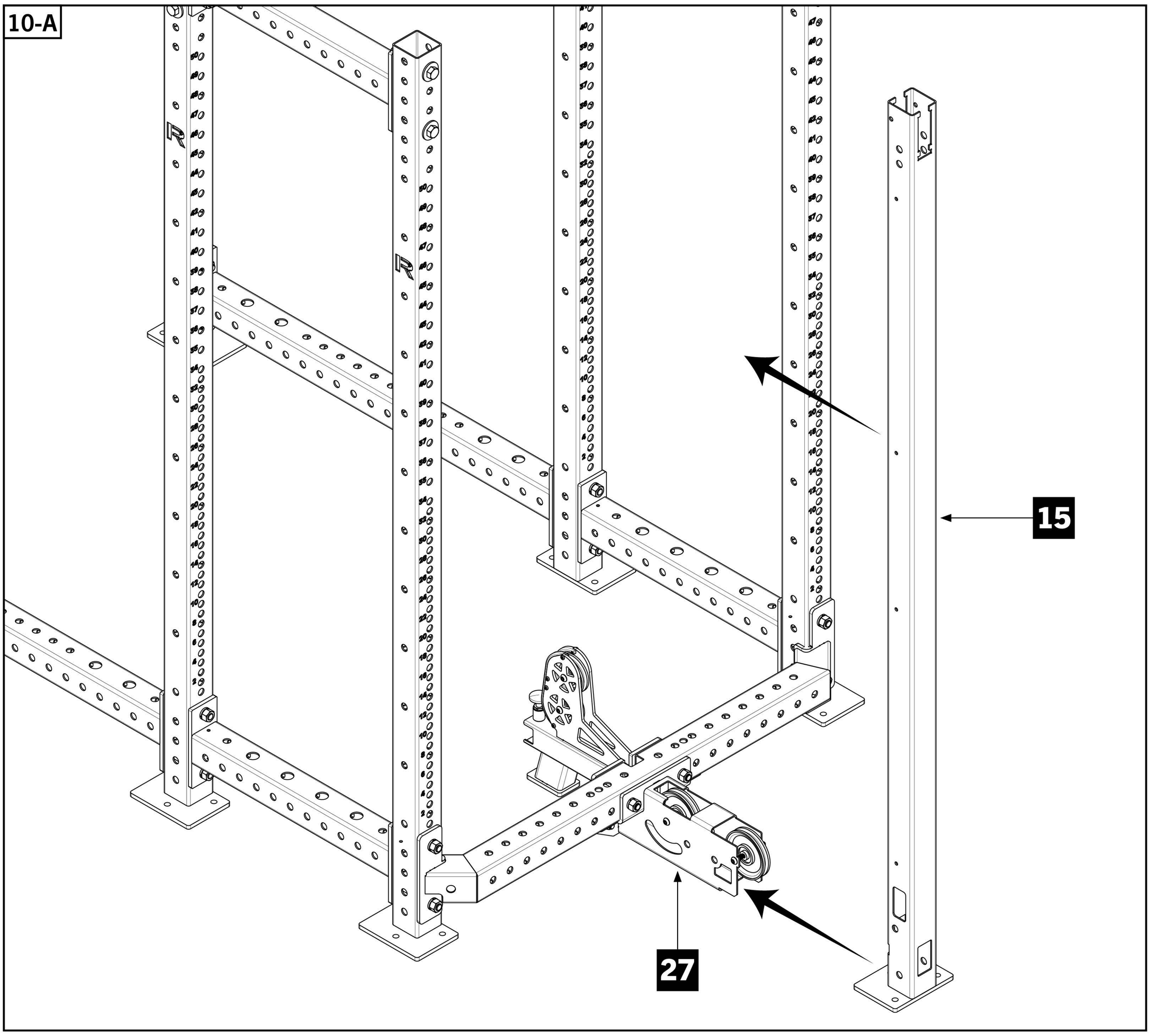

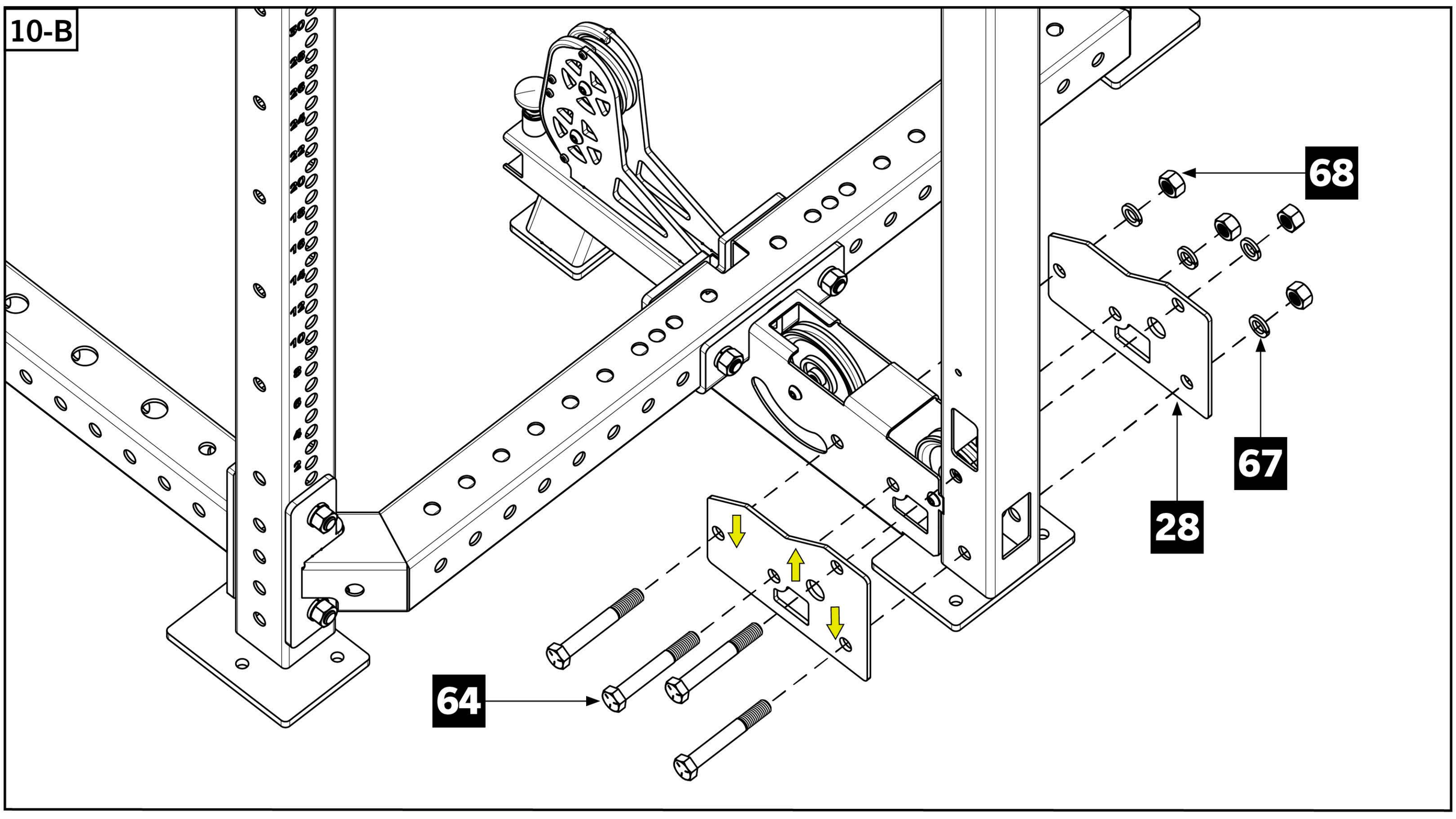

STEP 11

Tools Required:

- 15/16” Wrench
- Attach Weight Stack Shroud Bottom Bracket [**77**] and Weight Stack Spacer [**33**] to middle of Low Row Crossmember [**16**] by using 5/8” x 5” Hex Bolts [**63**], 5/8” Lock Washers [**67**], and 5/8” Hex Nuts [**68**].
- **Fully tighten** 5/8” vertical hardware in **11-A**.
- Place Weight Stack Bumpers [**35**] over outer 1” holes on the Weight Stack Spacer and insert Guide Rods [**29**] until they rest on top of the Low Row Crossmember.

Note:

- Shroud Bracket [**77**] only included if shroud kit was purchased. **Simply bolt the Weight Stack Spacer using hardware shown if shrouds were not purchased.**

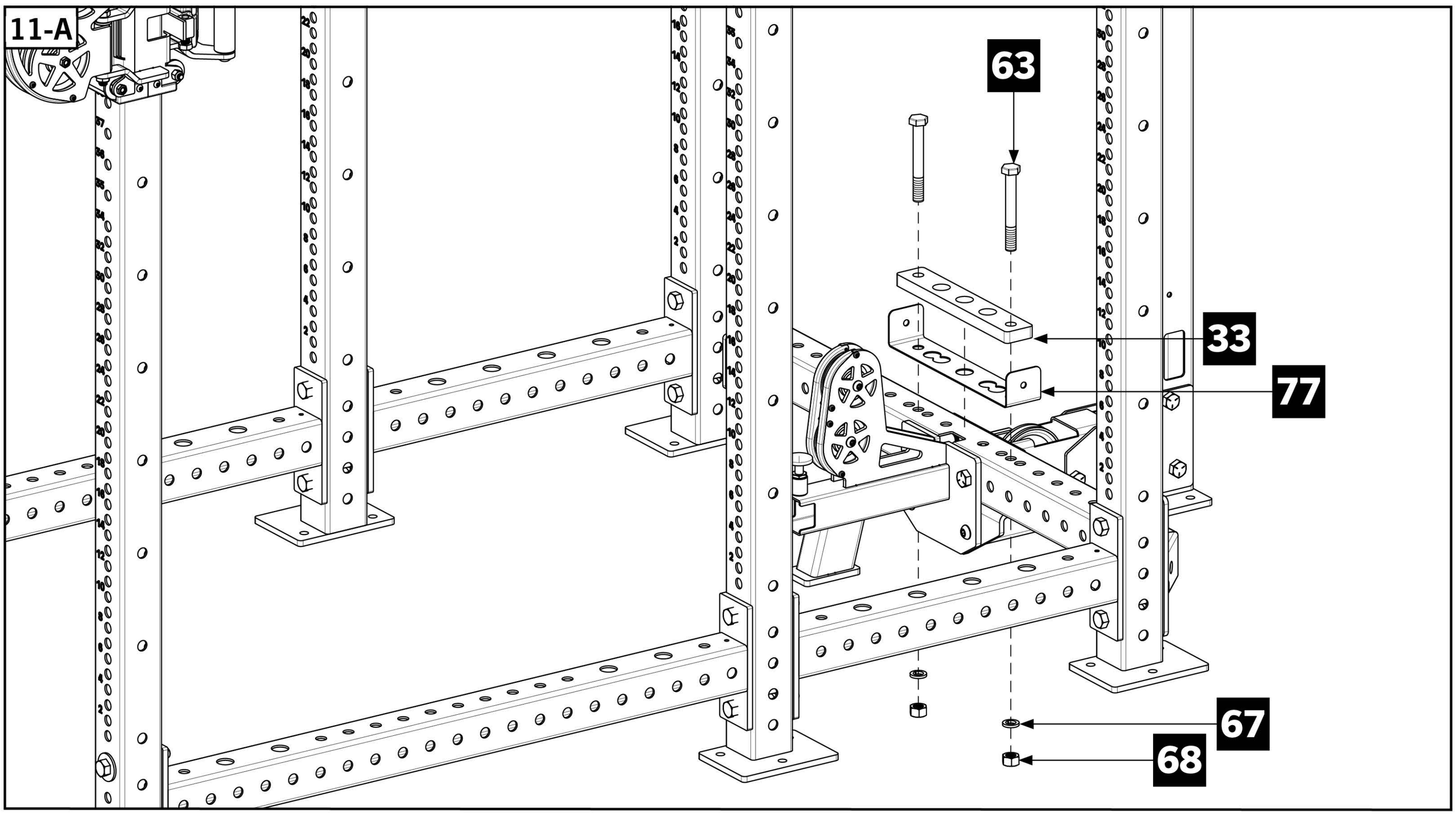

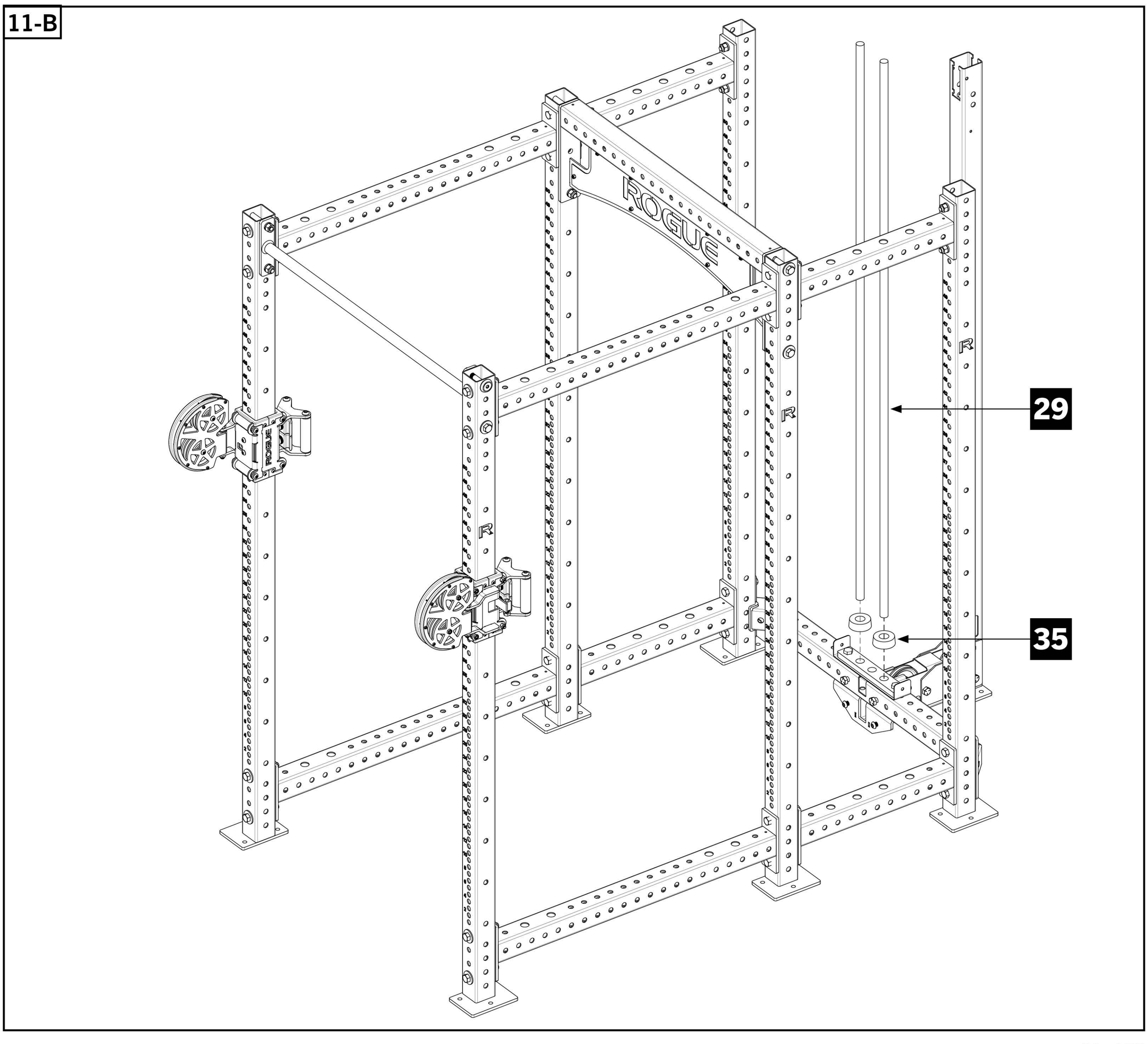

STEP 12

- Angle the Guide Rods toward the front of the rack.
- One at a time, carefully stack all included 10LB Weight Stack Plates [**31**] down the Guide Rods [**29**], ensuring not to drop them.
- **Note:** this is best accomplished with two or three people.
- Once all weights are stacked, slide the Weight Stack Stem [**30**] down the Guide Rods until resting on top of weight stack.
- Ensure 20LB Weight Stack Sticker on the top Plate of the stack is facing towards the front of rack as shown in Detail view.

12-A

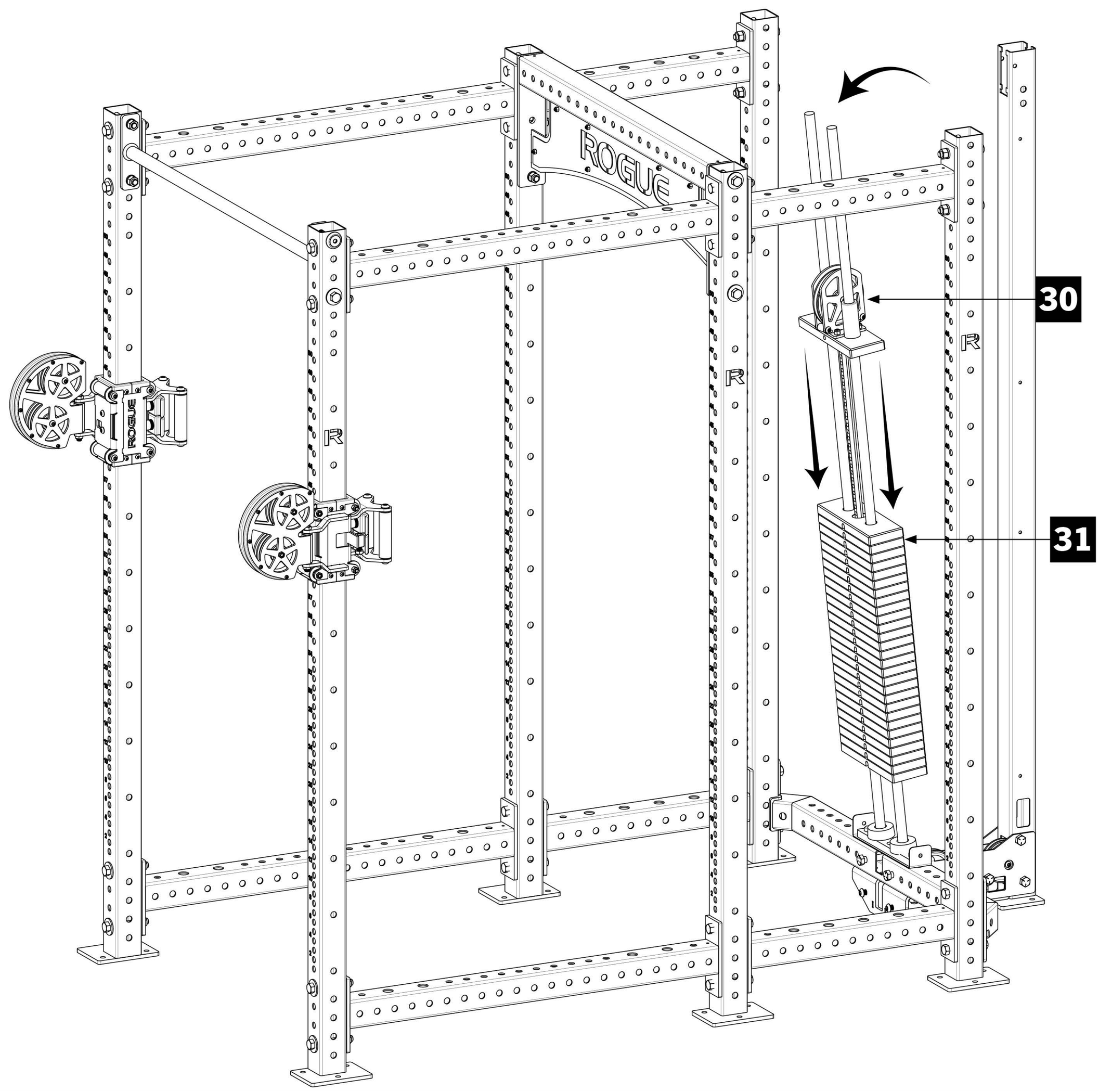

DETAIL

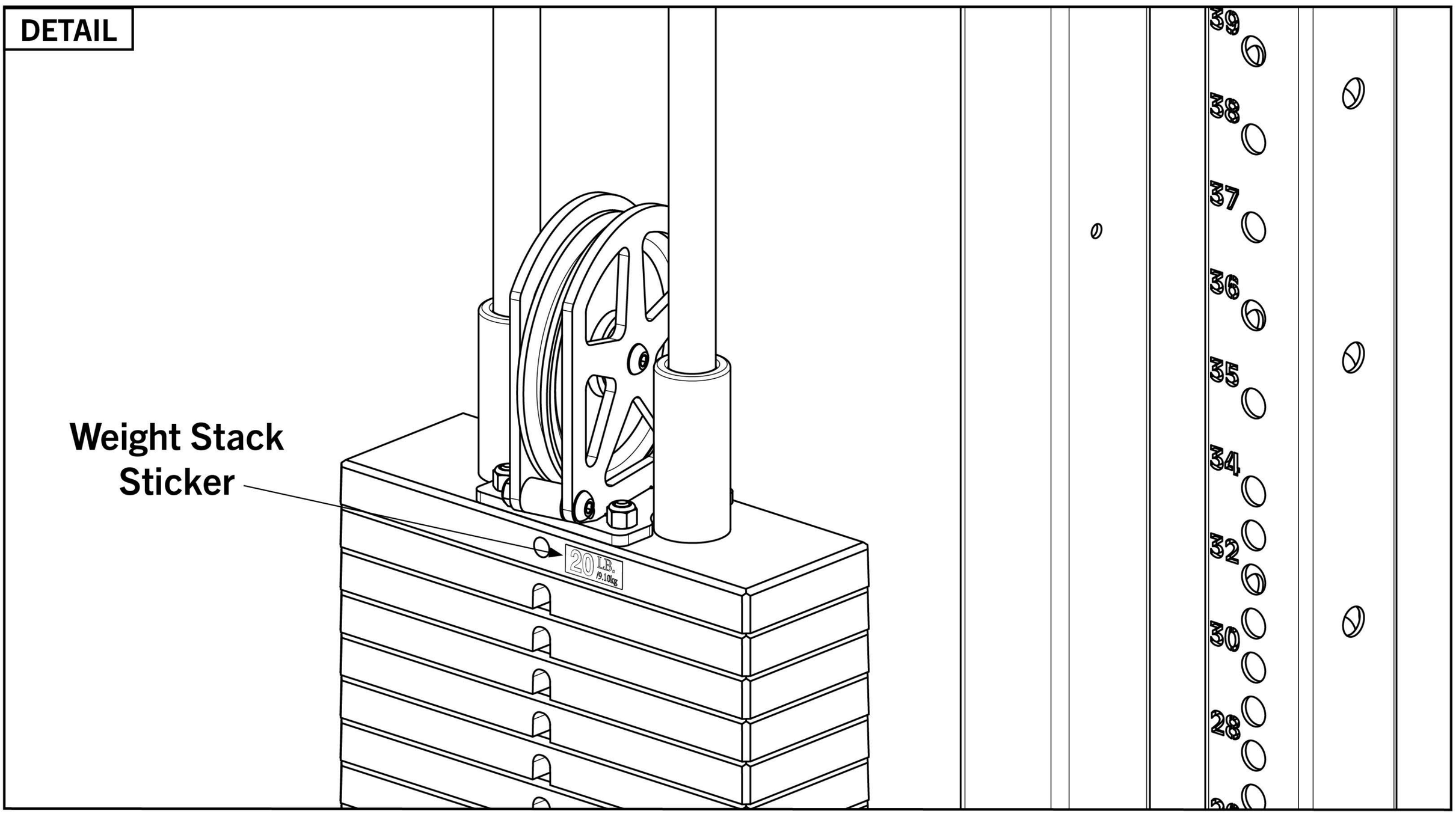

STEP 13

- Slide Top Weight Stack Stop Block [**34**] and Guide Rod Spacers [**36**] down guide rods and rest on top of Weight Stack Stem Pulley as shown.

- Bolt Lat Bar Hanger [**25**], Lat Pulldown Pulley Bracket [**24**], and Top Center Crossmember [**19**] to Nameplate Crossmember [**4**] using 5/8” x 5” Hex Bolts [**63**], 5/8” Lock Washers [**67**], and 5/8” Hex Nuts [**68**] as shown in **13-B**.

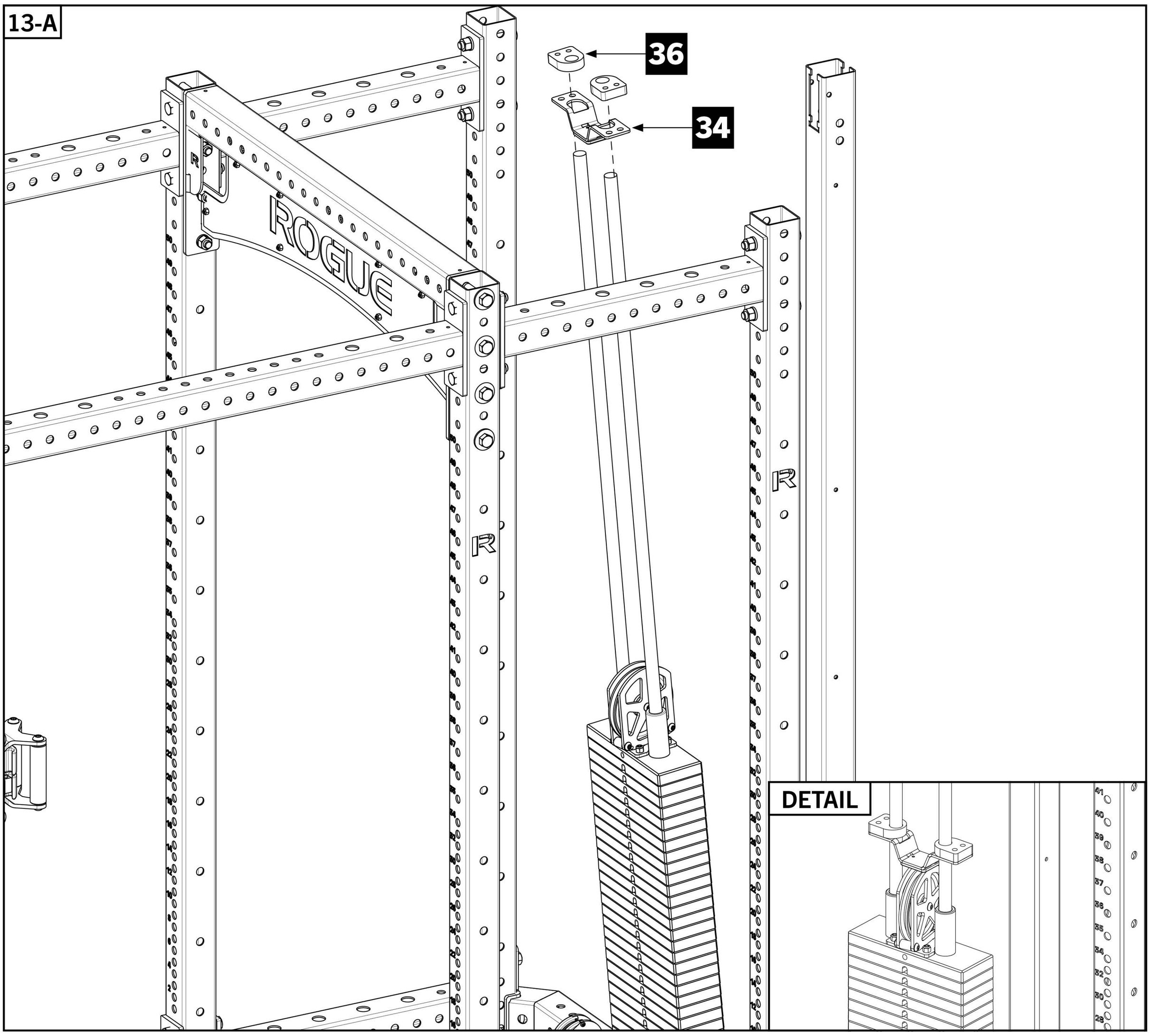

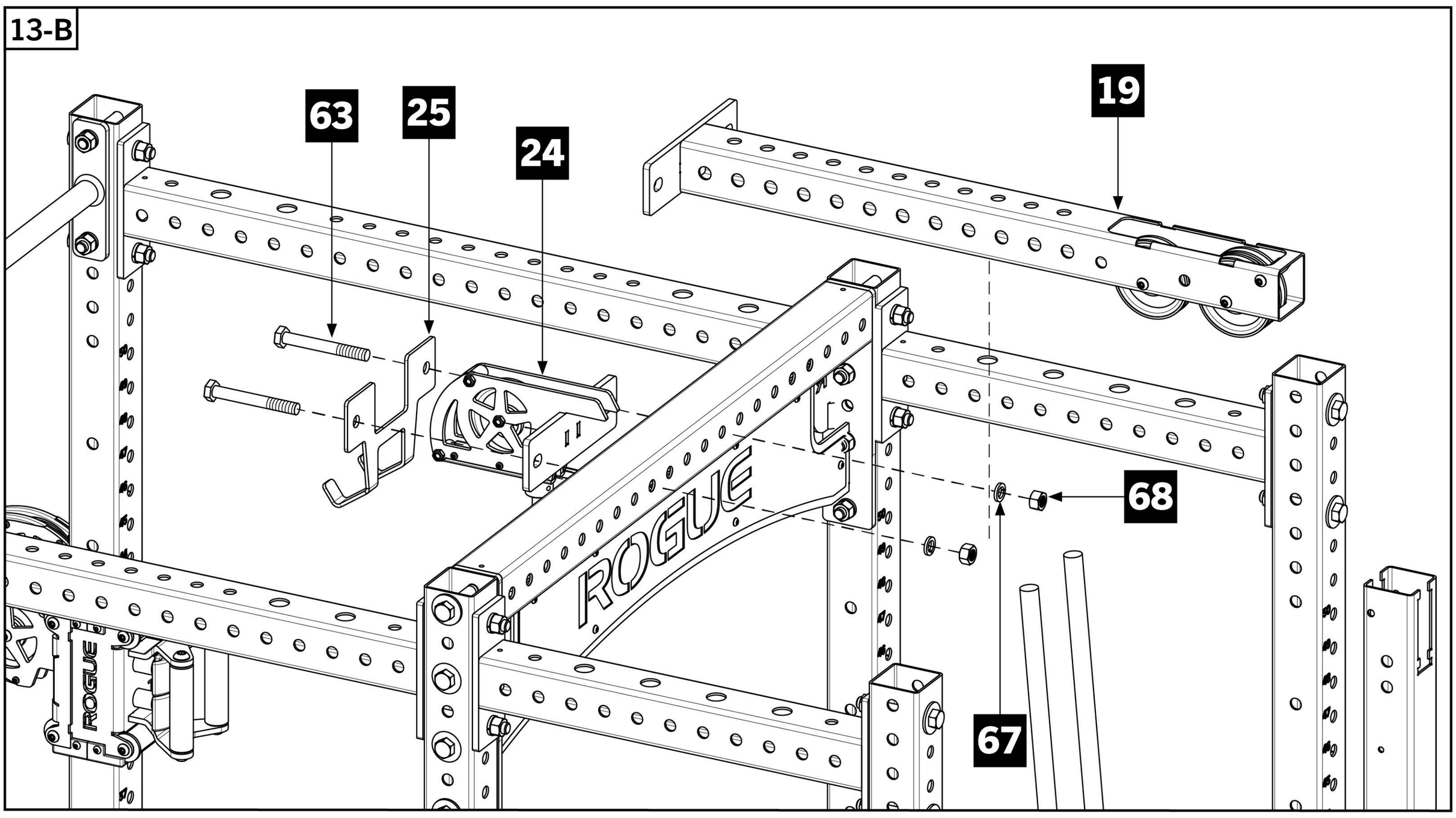

STEP 14

- Secure Top Rear Angle Crossmember - RH [**20**] and Top Side Pulley Assembly - RH [**42**] to 24” Rear Crossmembers [**3**] using 5/8” x 5” Hex Bolts [**63**], 5/8” x 4-1/2” Hex Bolts [**64**], 5/8” x 3/8” Pulley Bracket Spacer [**65**], 5/8” Lock Washers [**67**], and 5/8” Hex Nuts [**68**].
- Secure Side Shroud Top Bracket - RH [**82**] to 24” Rear Crossmember [**3**] using 5/8” Lock Washers [**67**], and 5/8” Hex Nuts [**68**].

Note:

- Use 5/8” Flat Washers [**66**] instead of Side Shroud Top Brackets if Shroud Kit was not purchased.

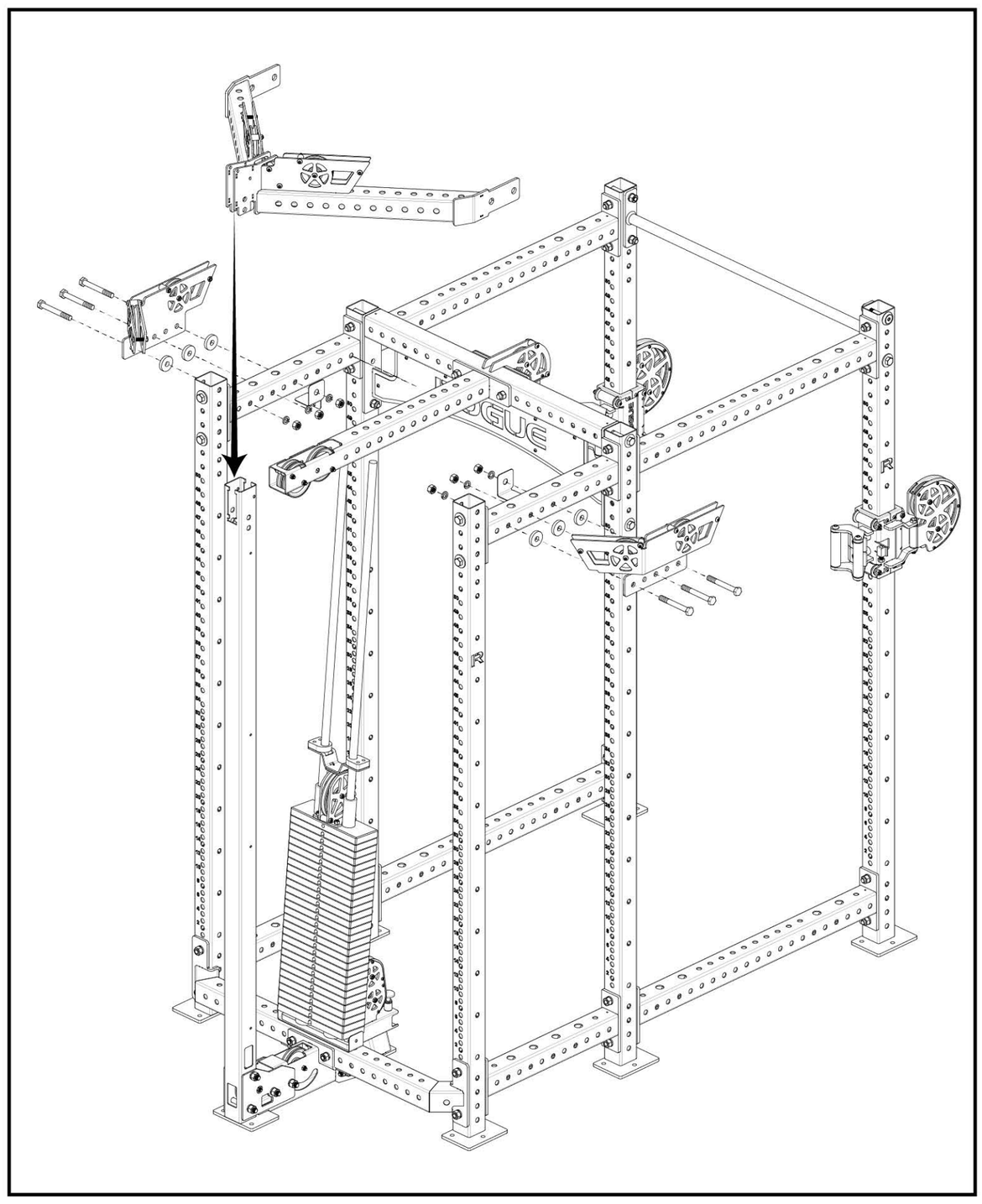

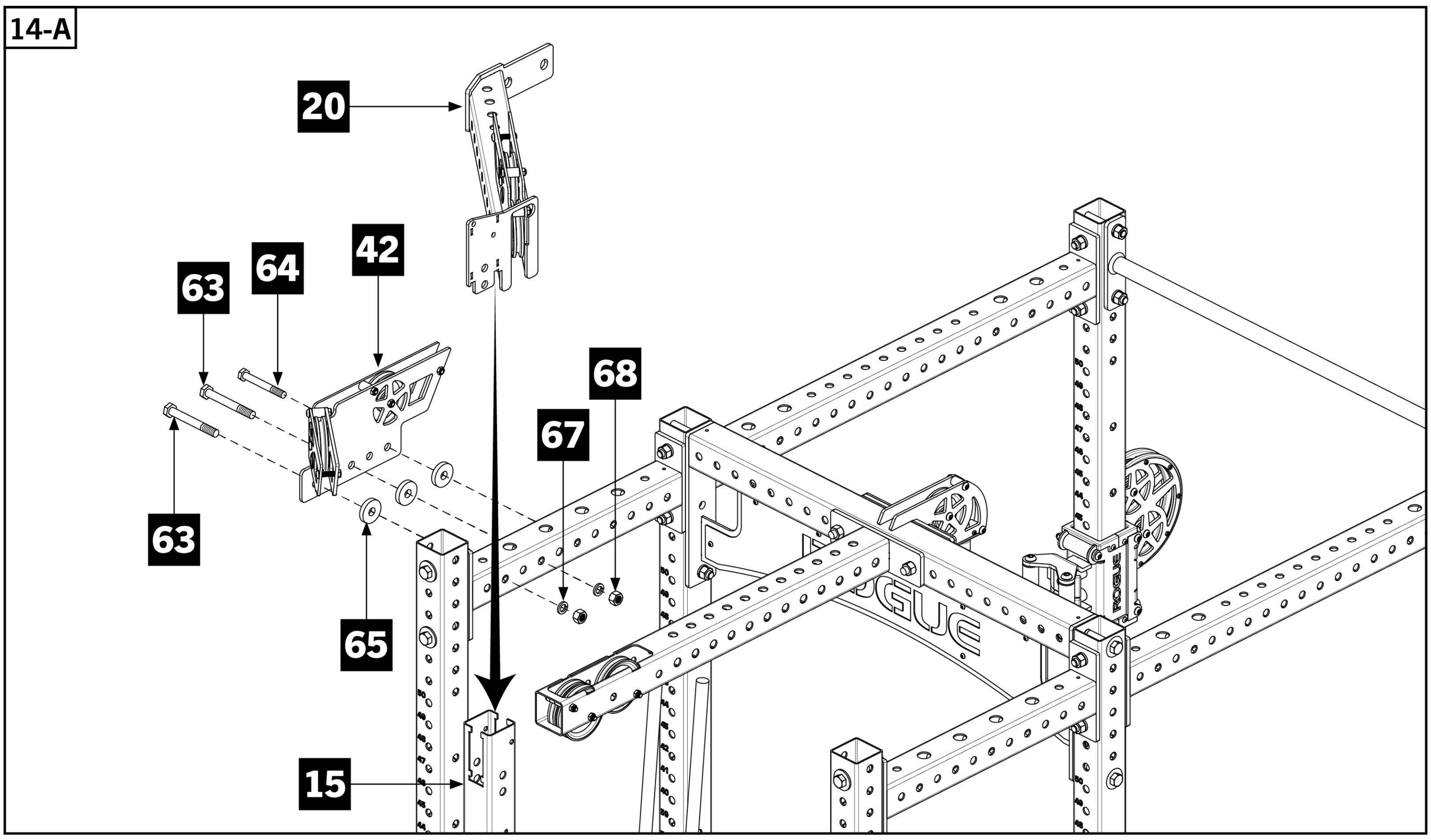

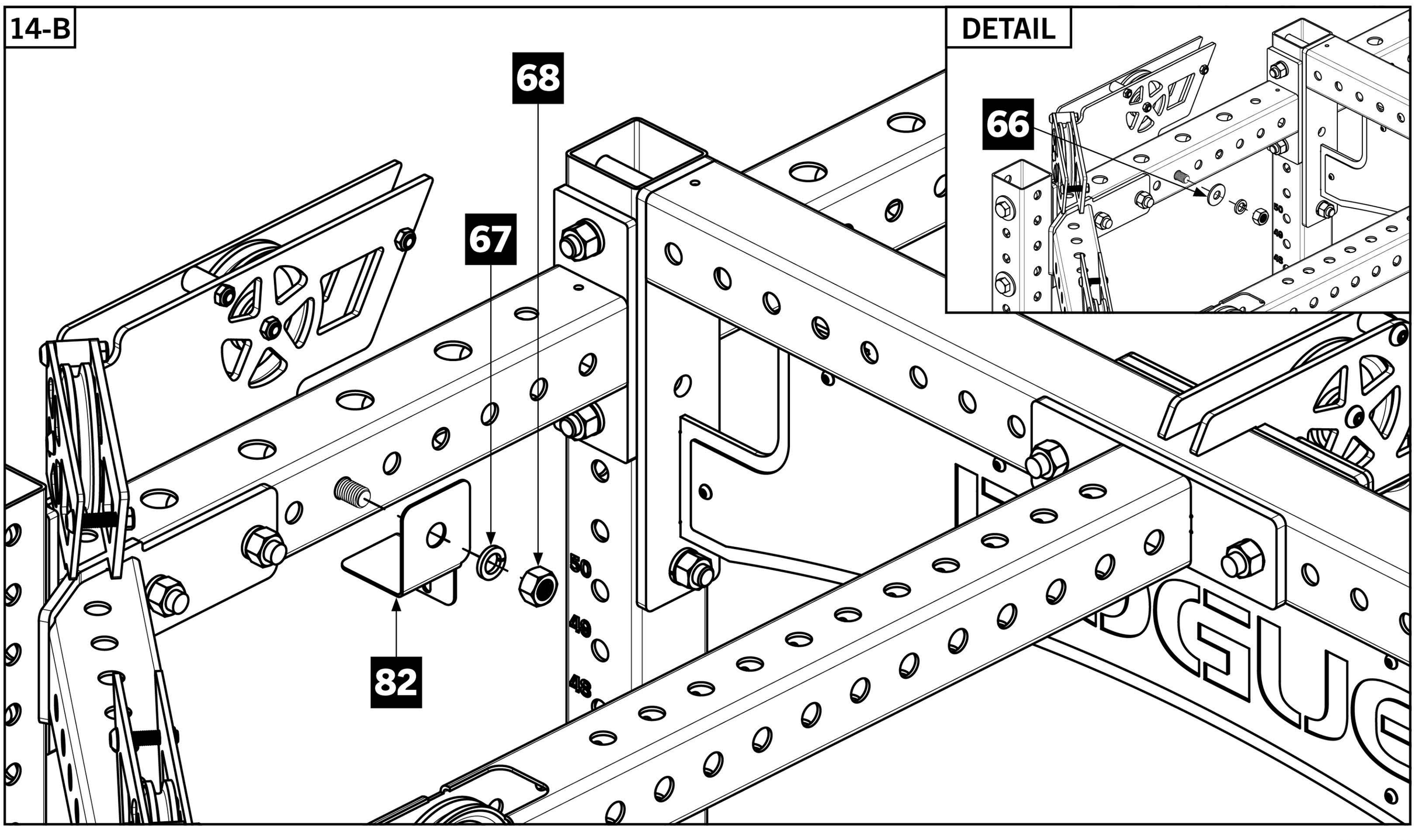

STEP 14 (CONTINUED)

- Secure Top Rear Angle Crossmember - LH [**21**] and Top Side Pulley Assembly - LH [**43**] to 24” Rear Crossmembers [**3**] using 5/8” x 5” Hex Bolts [**63**], 5/8” x 4-1/2” Hex Bolts [**64**], 5/8” x 3/8” Pulley Bracket Spacer [**65**], 5/8” Lock Washers [**67**], and 5/8” Hex Nuts [**68**].

- [!] Ensure locking tabs on Rear 3X3 Upright are locked into all four slots on each Angle Crossmember by using a down-and-outward sliding motion when dropping the Angle Crossmembers into place.

- Secure Side Shroud Top Bracket - LH [**83**] to 24” Rear Crossmember [**3**] using 5/8” Lock Washers [**67**], and 5/8” Hex Nuts [**68**].

14-C

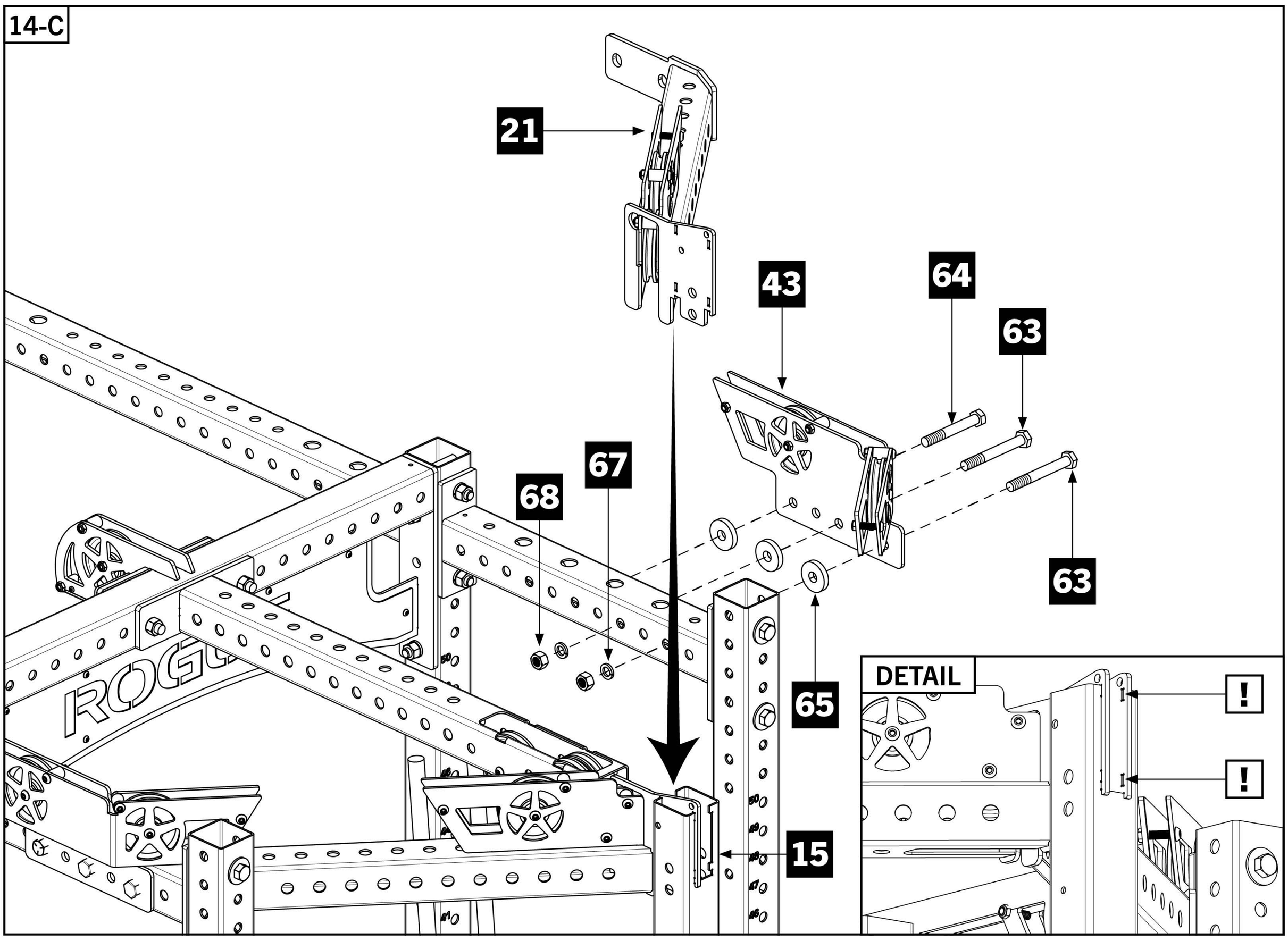

14-D

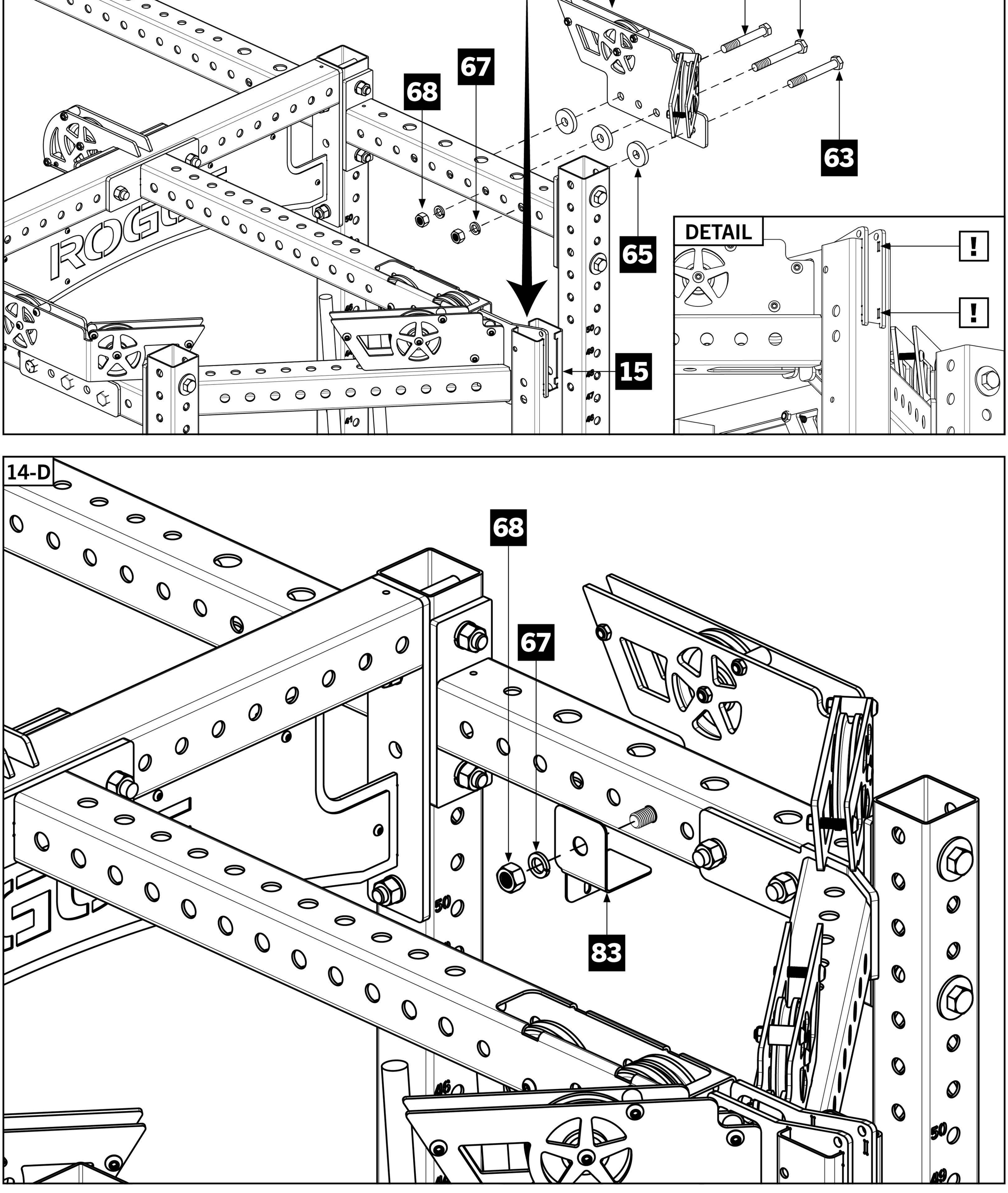

STEP 15

- Bolt Top Rear Connector Plates RH [**22**] and LH [**23**] to Top Center Crossmember [**29**] and Rear 3X3 Upright [**15**] using 5/8" x 4-1/2" Hex Bolts [**64**], 5/8" Lock Washers [**67**], and 5/8" Hex Nuts [**68**].

15-A

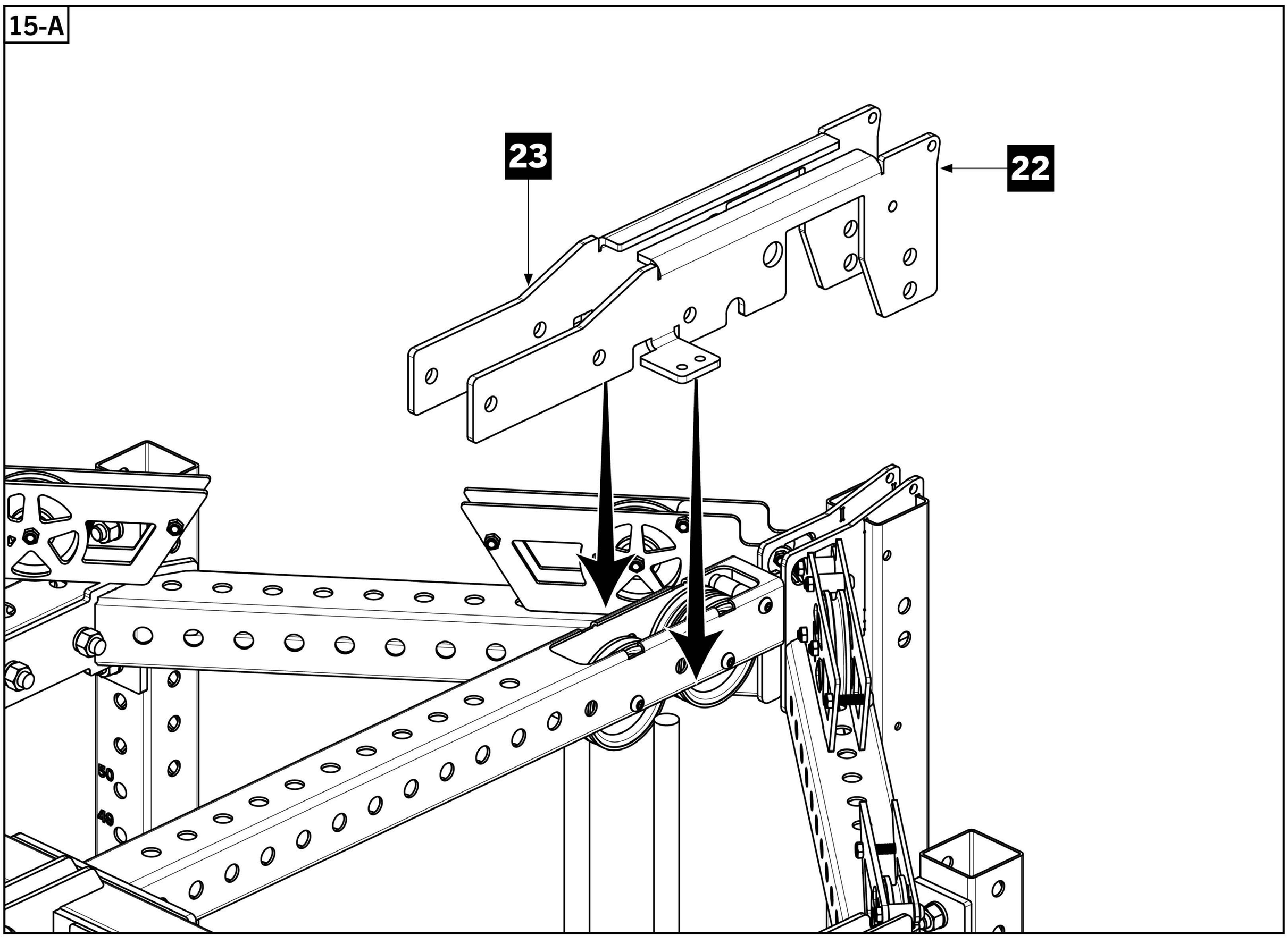

15-B

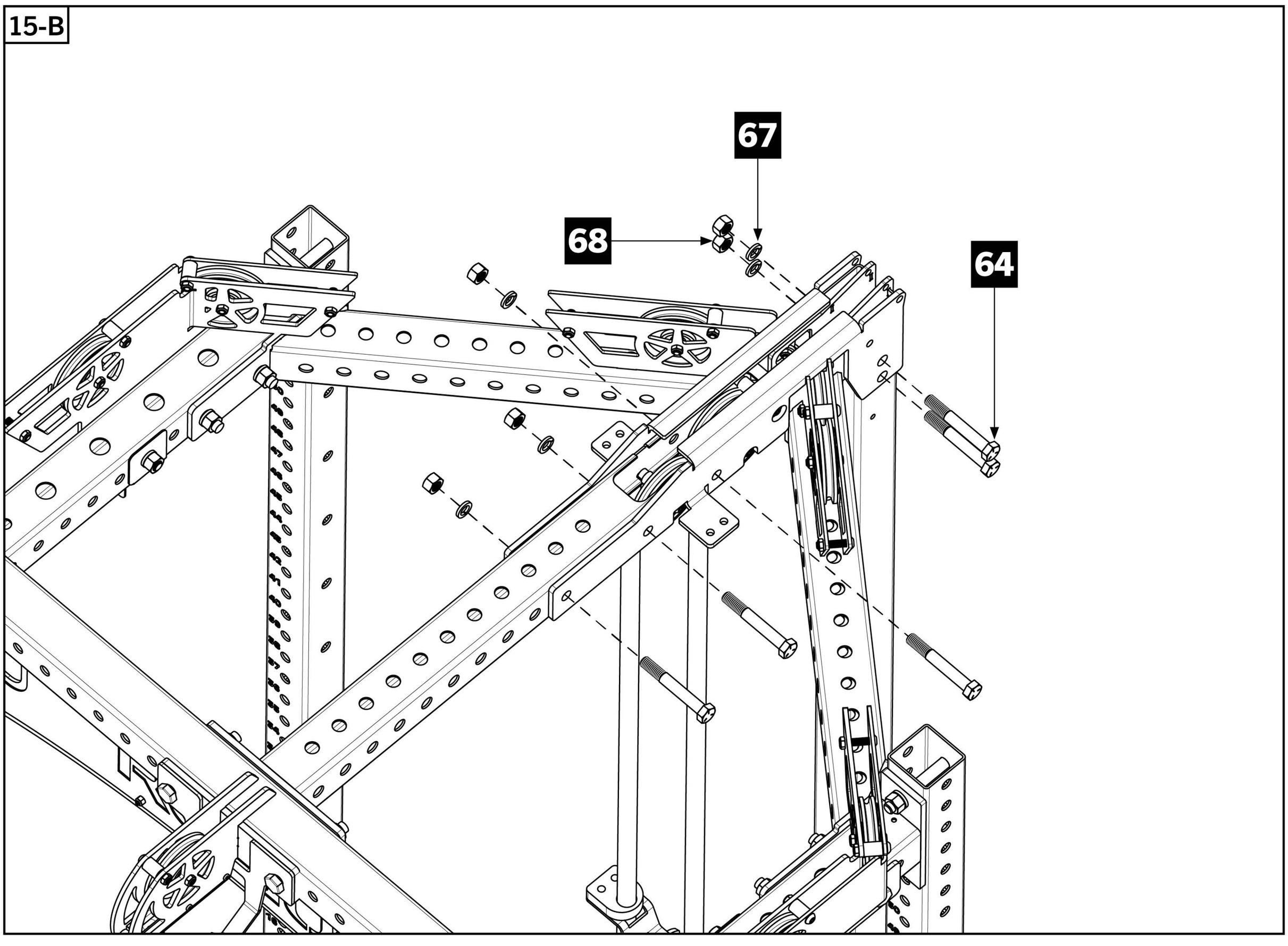

STEP 16

- Secure 4.5” Pulley [**50**] and 3/4” x 1” Cable Retainer [**51**] inside top rear center slot of the of the assembly using 3 /8” x 4” Button Head Screws [**72**] and 3/8” Thin Nylock Nuts [**74**] through the indicated holes.
- Slide parts assembled in **Step 13** back up to the top of the Guide Rods.
- Bolt Stop Block assembly to indicated holes on Top Rear Connector Plates [**22**] and [**23**] using 3/8” x 1.75” Button Head Screws [**73**] and 3/8” Thin Nylock Nuts [**74**].

16-A

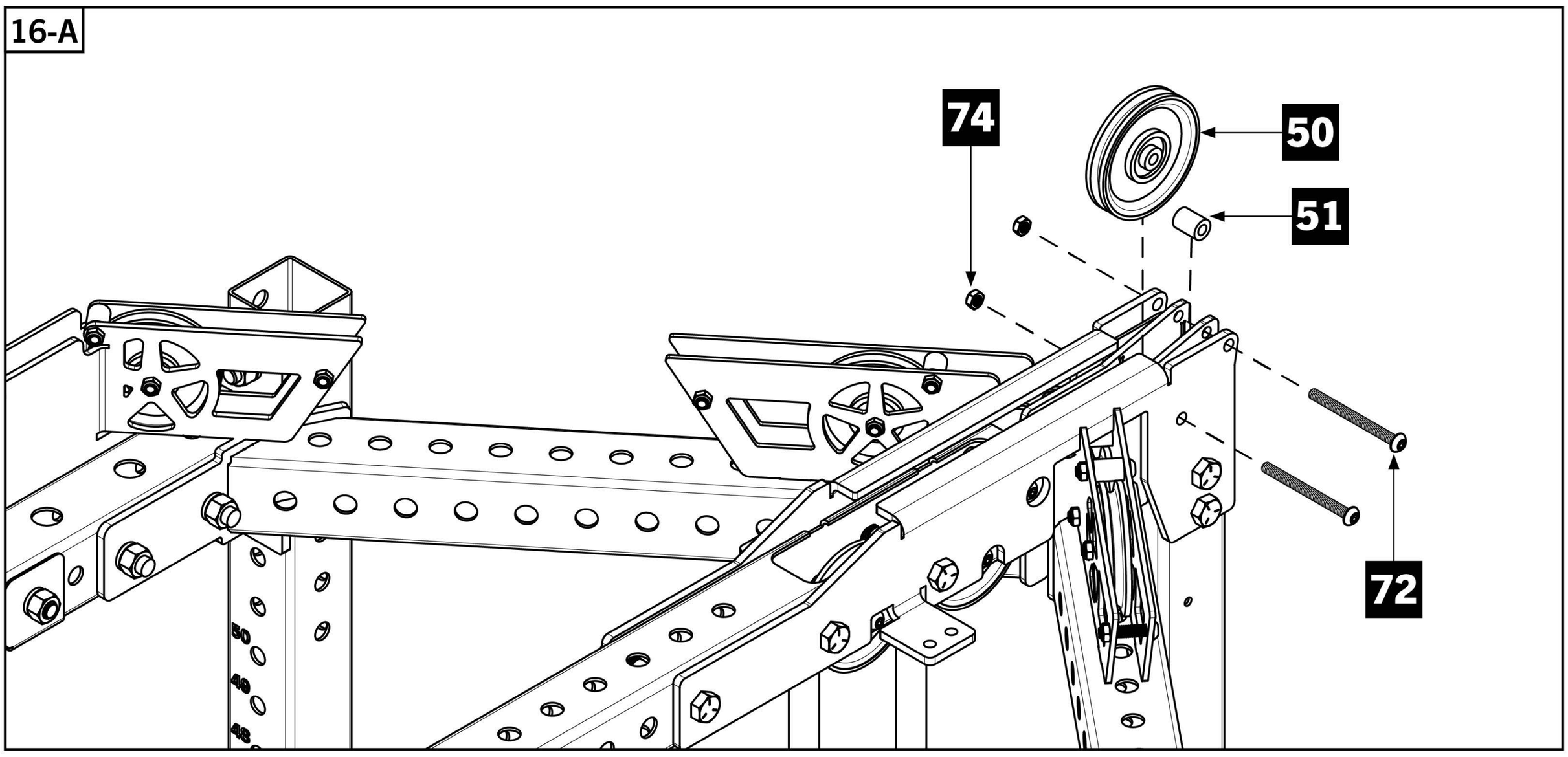

16-B

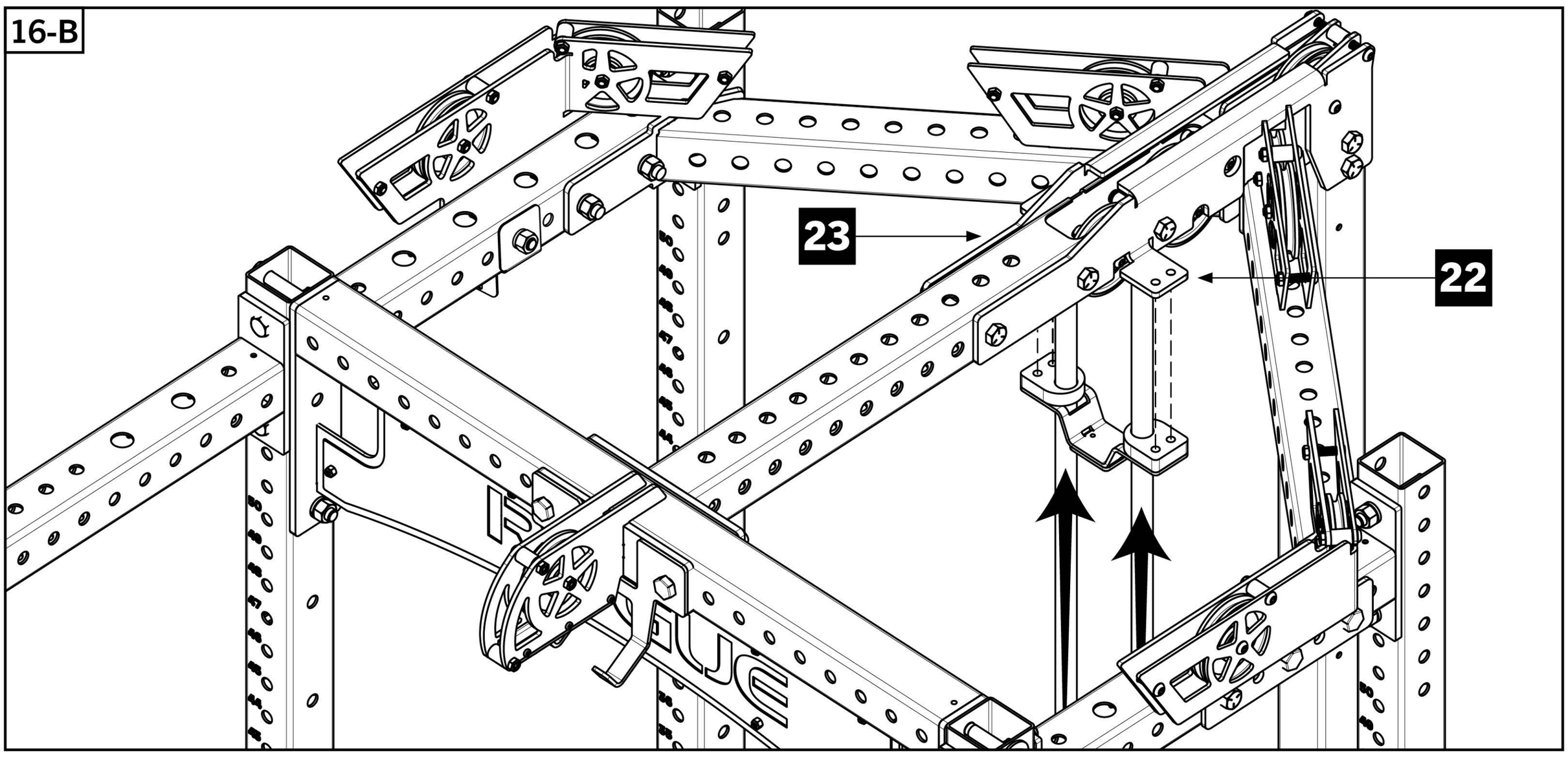

16-C

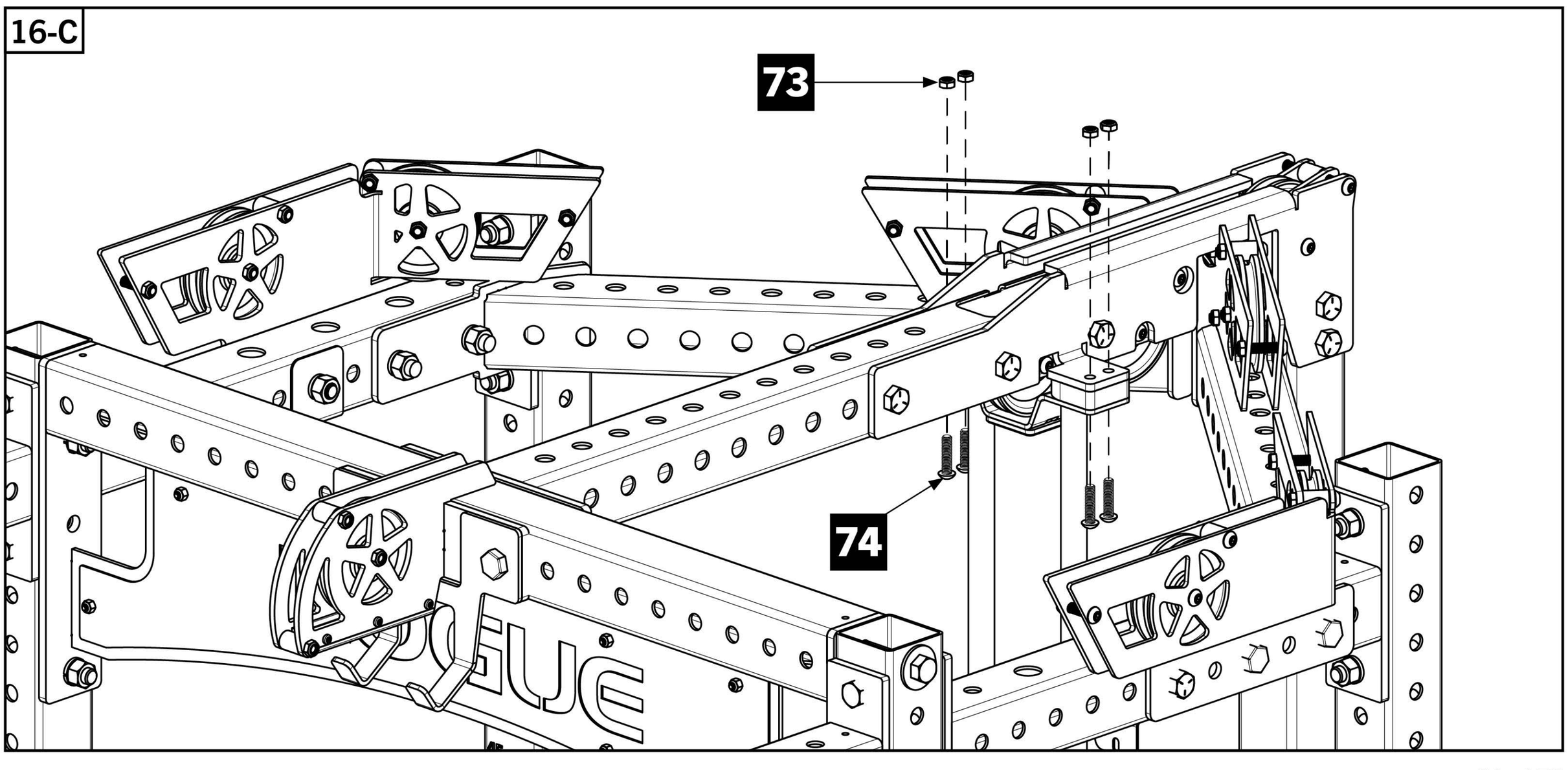

STEP 17

- Bolt Top Front Side Pulley Assembly - RH [**40**] and -LH [**41**] to the Front Top Crossmembers using 5/8” x 4/1/2” Hex Bolts [**64**], 5/8” x 3/8” Pulley Bracket Spacers [**65**], 5/8” Flat Washers [**66**], 5/8” Lock Washers [**67**], and 5/8” Hex Nuts [**68**] as shown.
- [!] 43” Front Crossmember is shown. The Top Front Side Pulley Assembly holes utilized will depend on length of your Front Crossmembers. Use the diagram below to determine which holes to use.

Note:

- If attaching to 43” or 24” Front Crossmember, bolt hardware through the 2nd and 4th holes on the Crossmember. If attaching to a 30” Front Crossmember, bolt hardware through the 1st and 3rd holes.

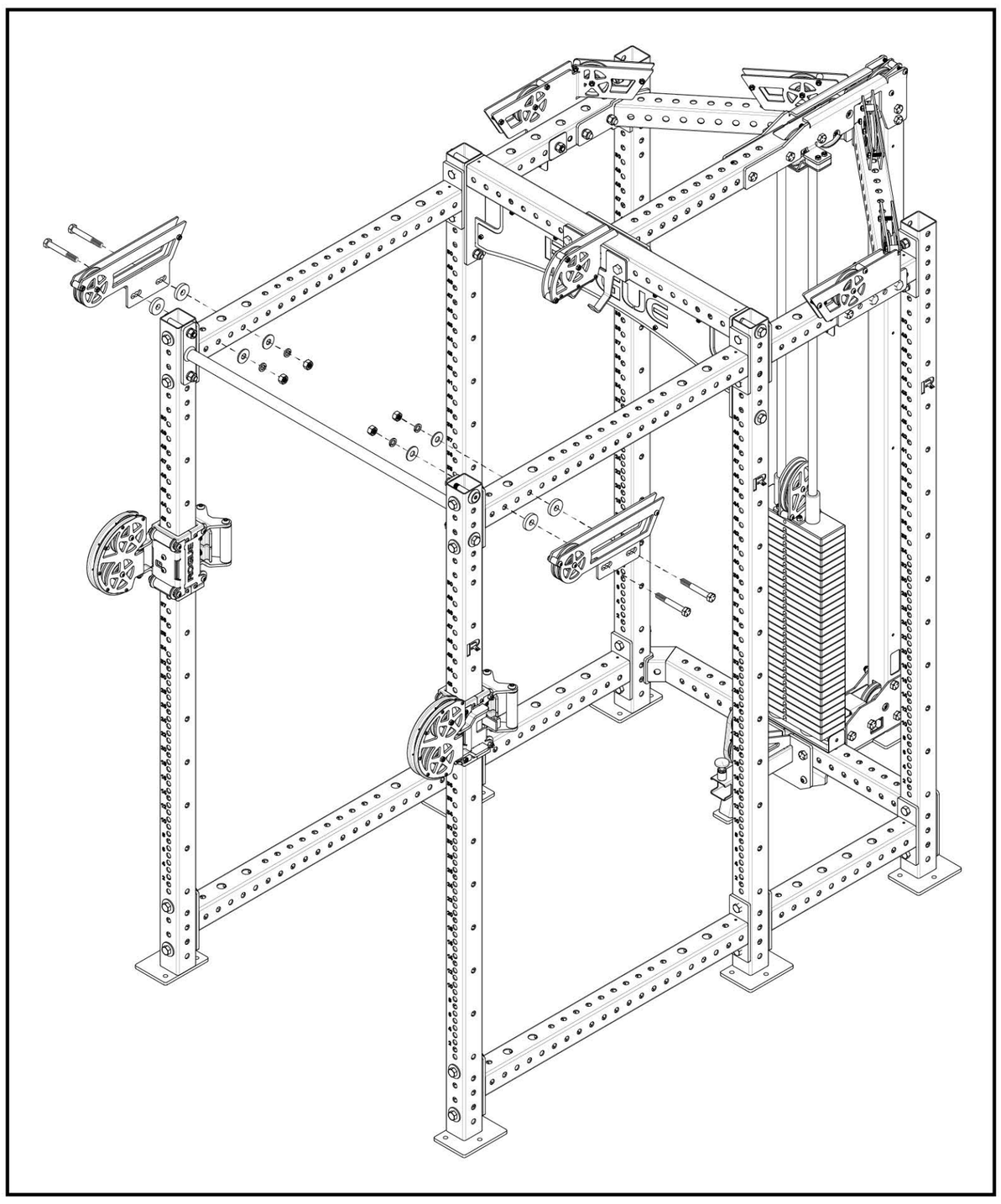

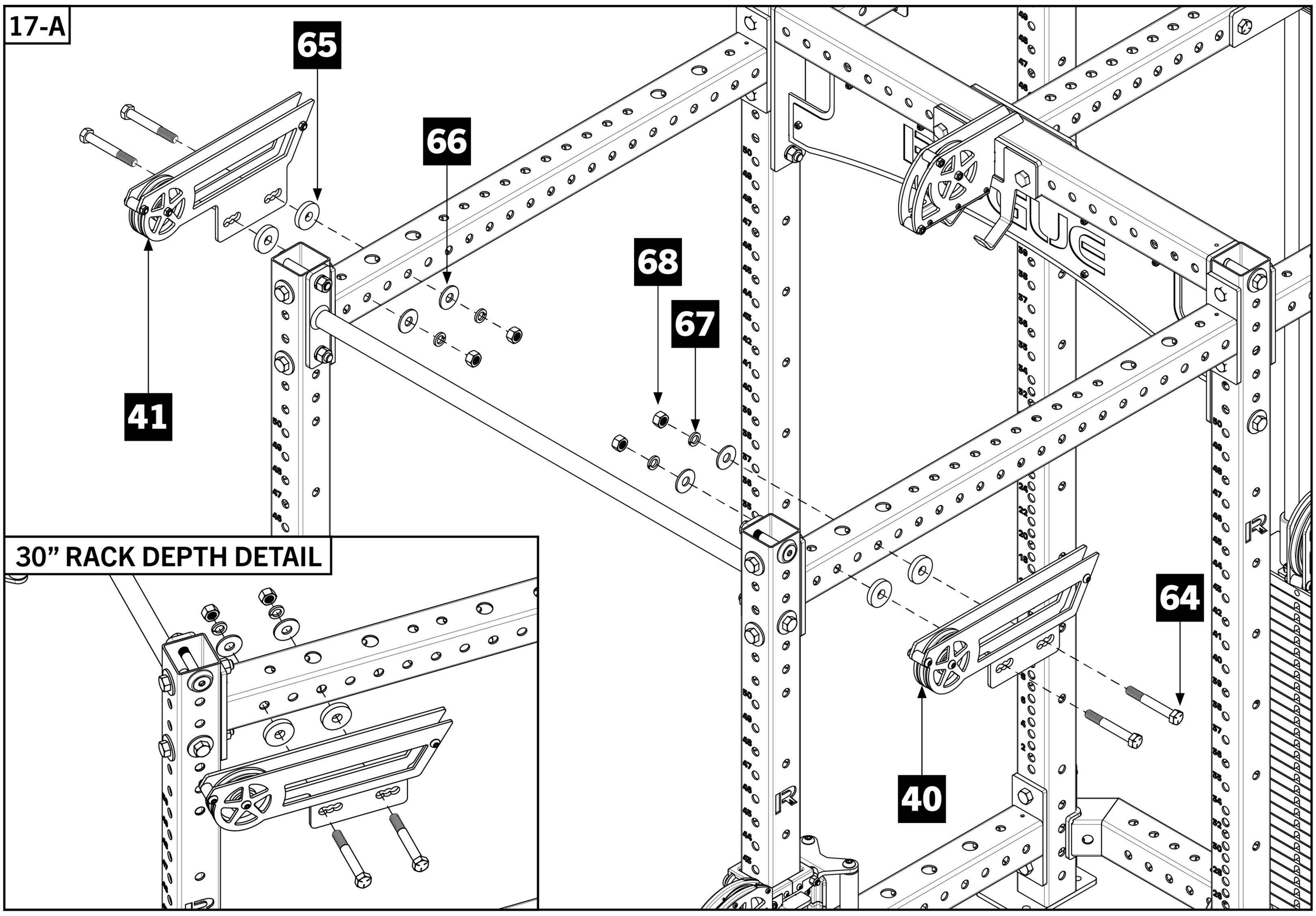

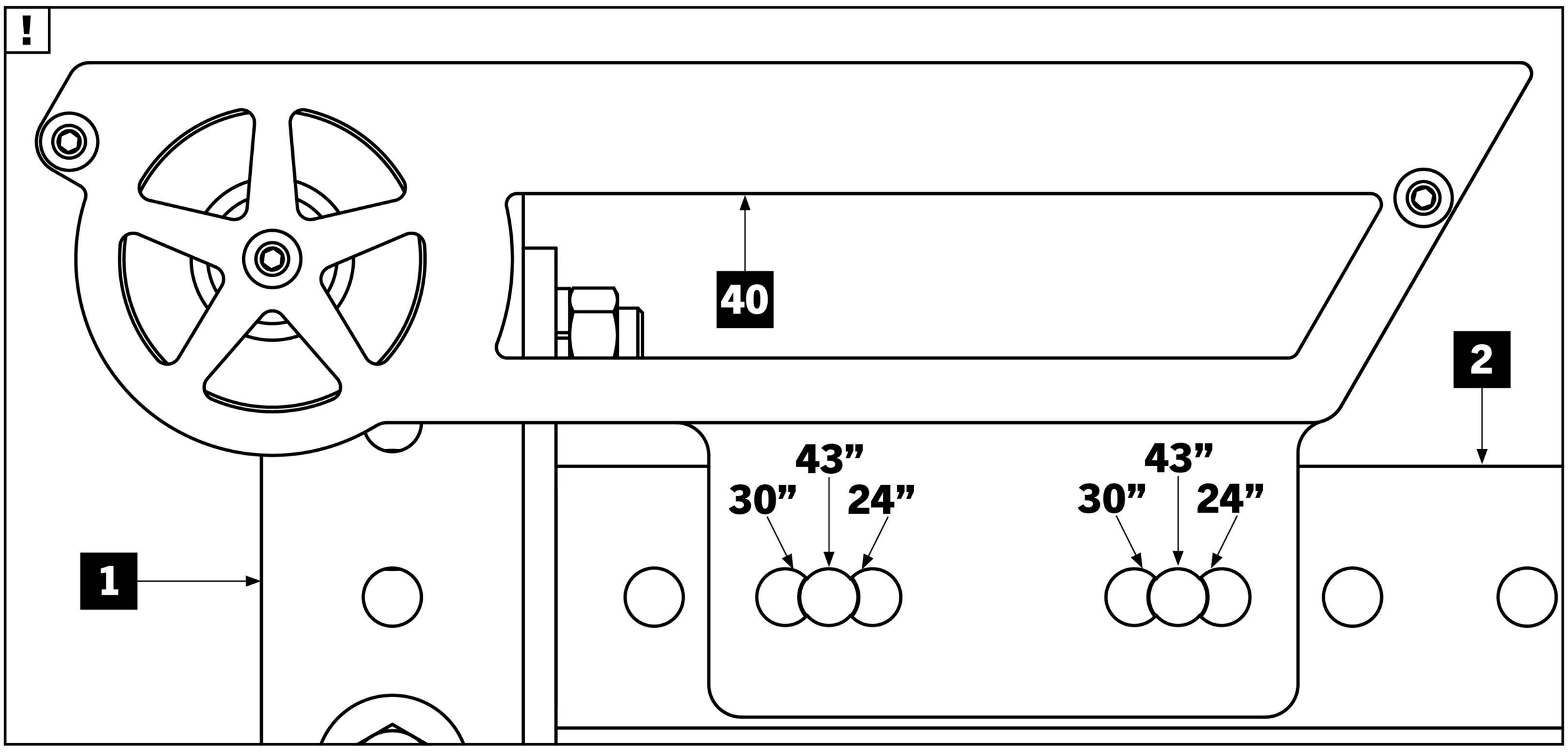

STEP 18

- Bolt Bottom Front Side Pulley Assembly - RH [**44**] and -LH [**45**] to the Front Low Crossmembers using 5/8” x 4-1/2” Hex Bolts [**64**], 5/8” x 3/8” Pulley Bracket Spacers [**65**], 5/8” Flat Washers [**66**], 5/8” Lock Washers [**67**], and 5/8” Hex Nuts [**68**].
- [!] 43” Front Crossmember is shown. The Bottom Front Side Pulley Assembly holes utilized will depend on length of your Front Crossmembers. Use the diagram below to determine which holes to use.

Note:

- If attaching to 43” or 24” Front Crossmember, bolt hardware through 4th and 6th holes. If attaching to 30” Front Crossmember, bolt through 3rd and 5th holes.
- Bolt heads should be oriented on the inside of rack as shown.

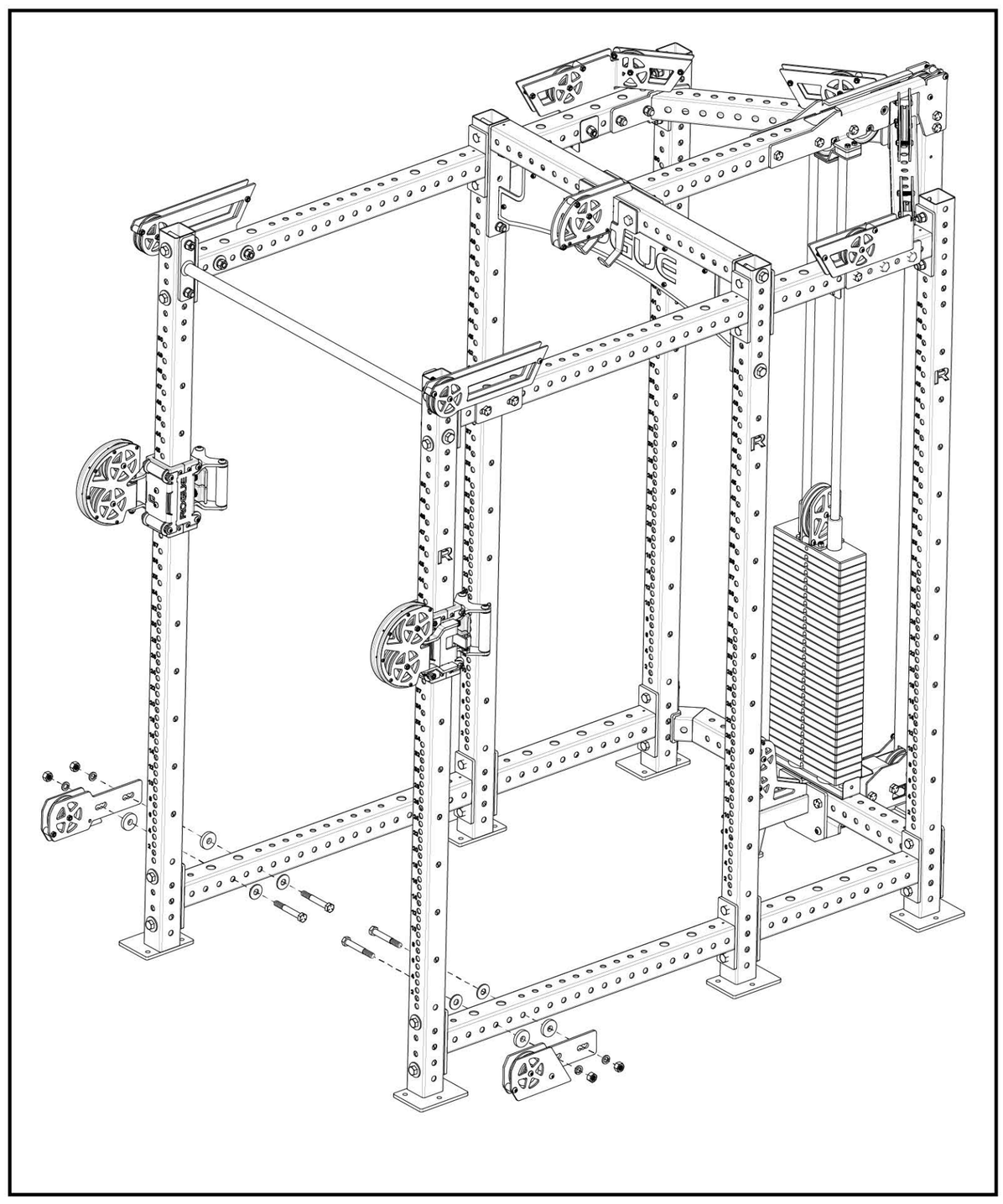

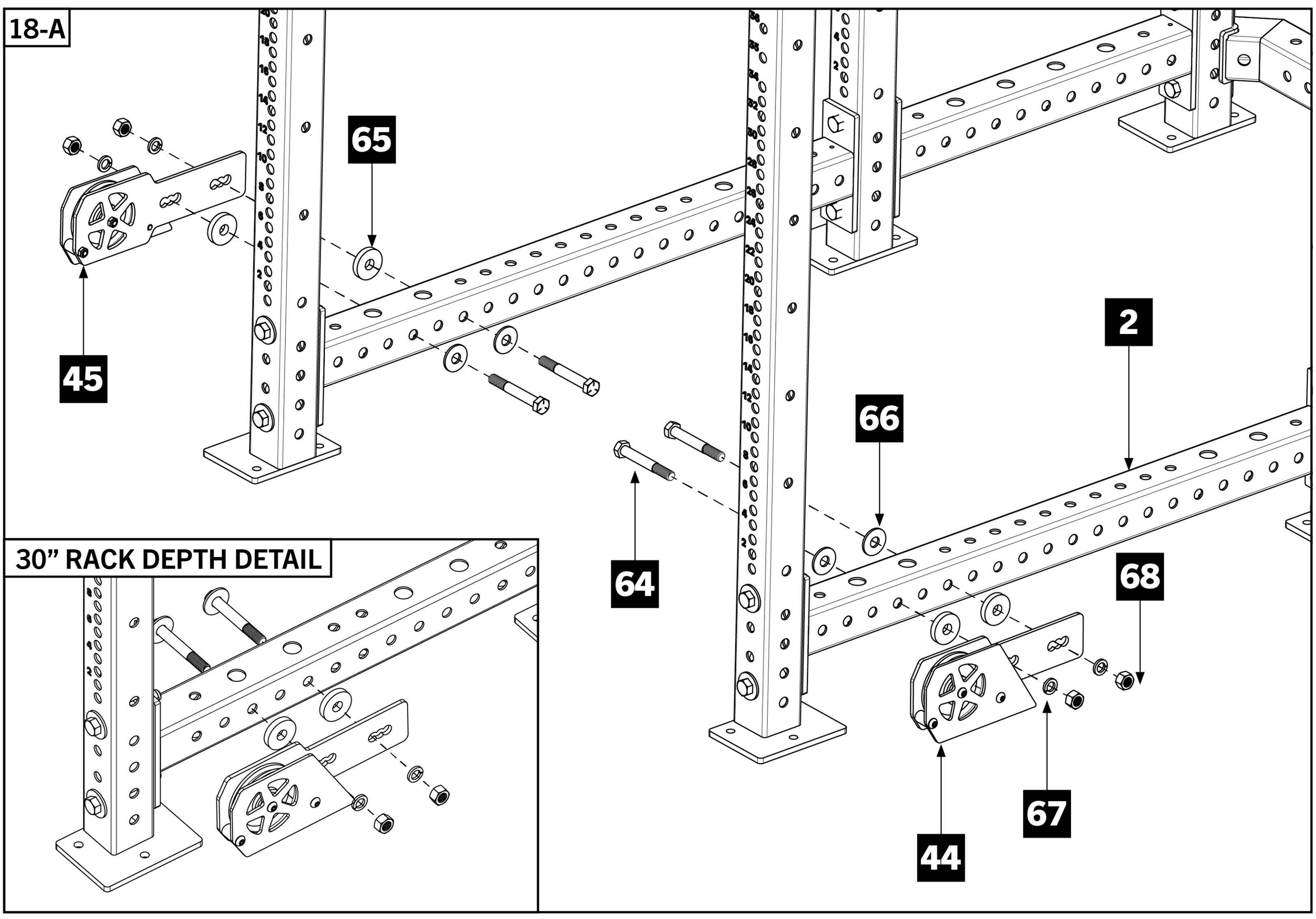

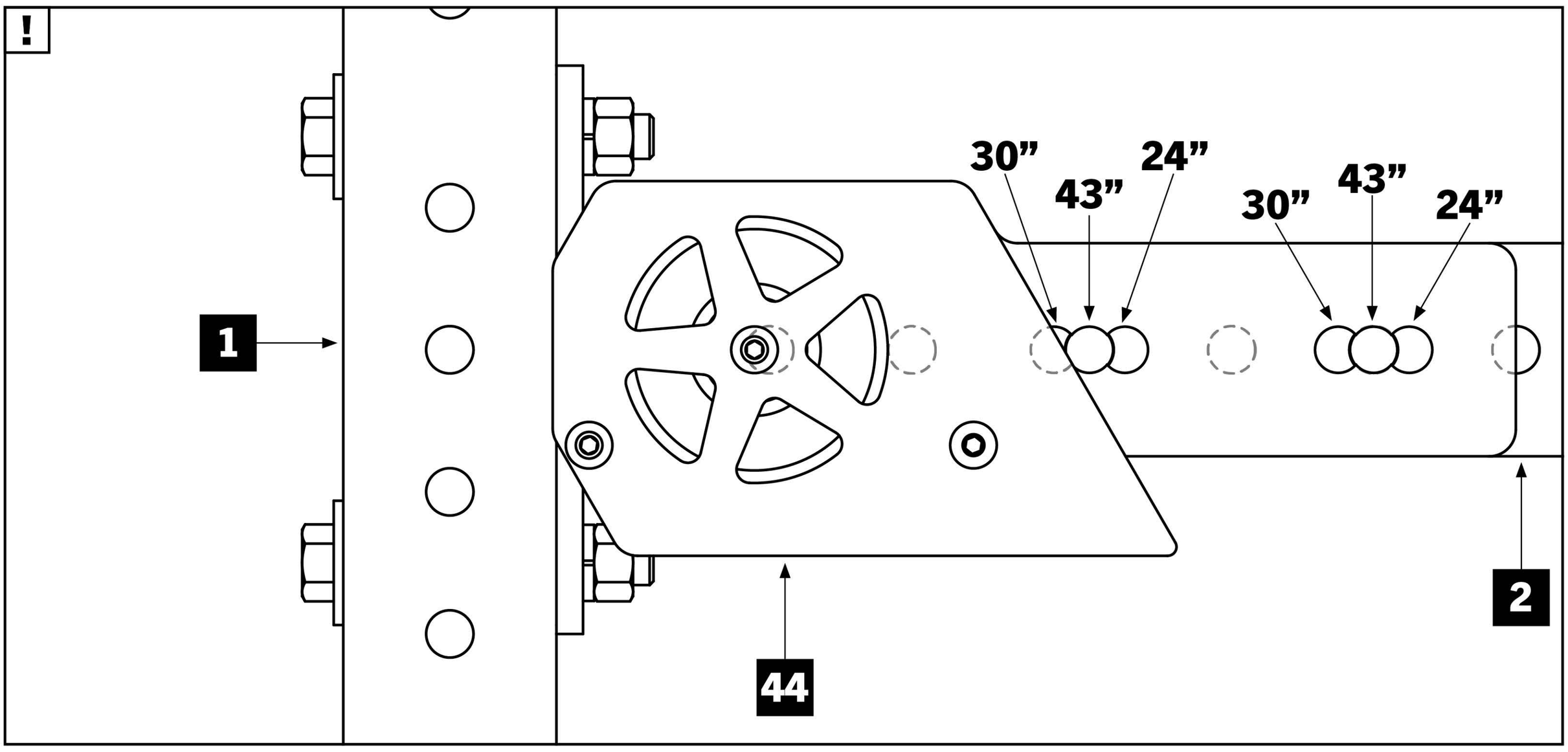

STEP 19

- Bolt Bottom Side Pulley Assembly - RH [**46**] and - LH [**47**] and Side Shroud Bottom Bracket - RH [**84**] and - LH [**85**] to the 24” Crossmembers [**3**] using 5/8” x 4-1/2” Hex Bolts [**64**], 5/8” x 3/8” Pulley Bracket Spacers [**65**], 5/8” Flat Washers [**66**], 5/8” Lock Washers [**67**], 5/8” Hex Nuts [**68**] as shown.
- Ensure hardware is installed through holes 3 and 9.

Note:

- Use 5/8” Flat Washers [**66**] instead of Side Shroud Top Brackets if Shroud Kit was not purchased.

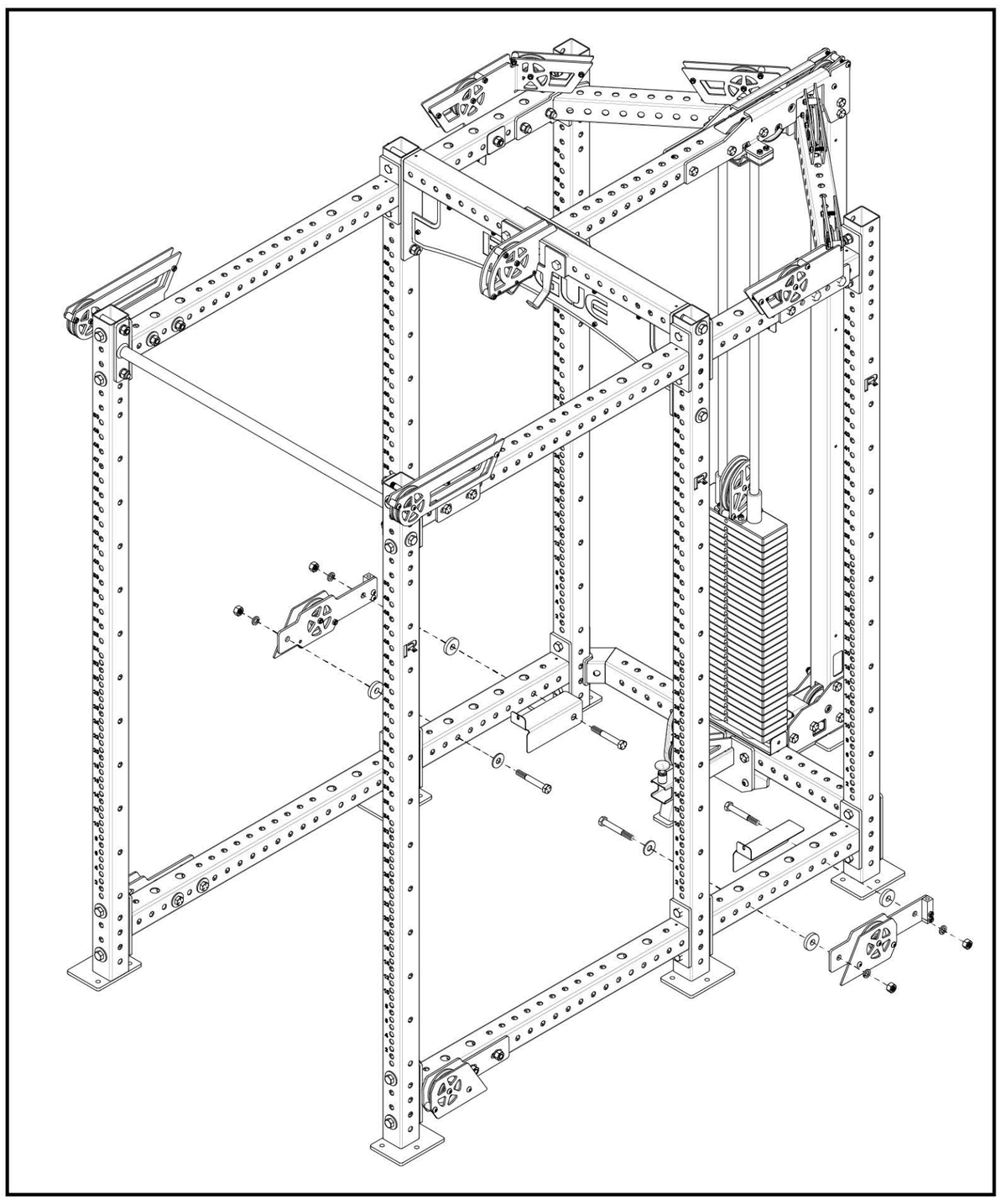

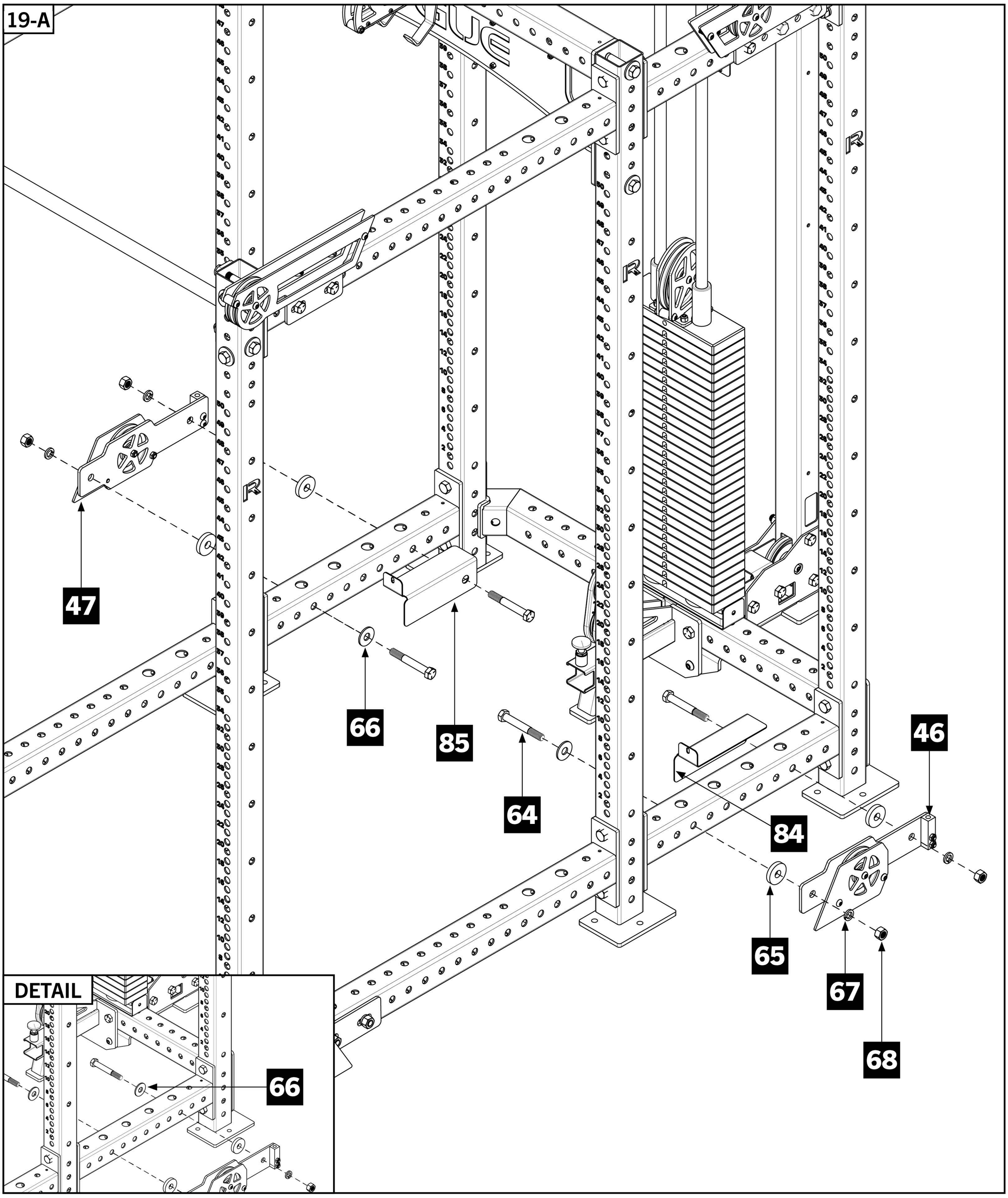

STEP 20

Note:

- Completely unwind and straighten out Trolley/Trolley Cable [**52**] to remove any twists/kinks prior to installation.
- The blue arrows shown in **STEP 20** through **STEP 25** indicate directions for assembling the Trolley/Trolley Cable and correspond with the blue tag on the Ball End of cable.
- Feed the Ball End of Trolley/Trolley Cable [**52**] between the two pulleys inside Swivel Trolley RH [**17**] and continue upward.
- Feed the cable around pulley inside the Top Front Side Pulley Assembly - RH [**40**] and continue toward the back of the rack.
- Continue around the first pulley on Top Rear Side Pulley Assembly - RH [**42**] and then downward.

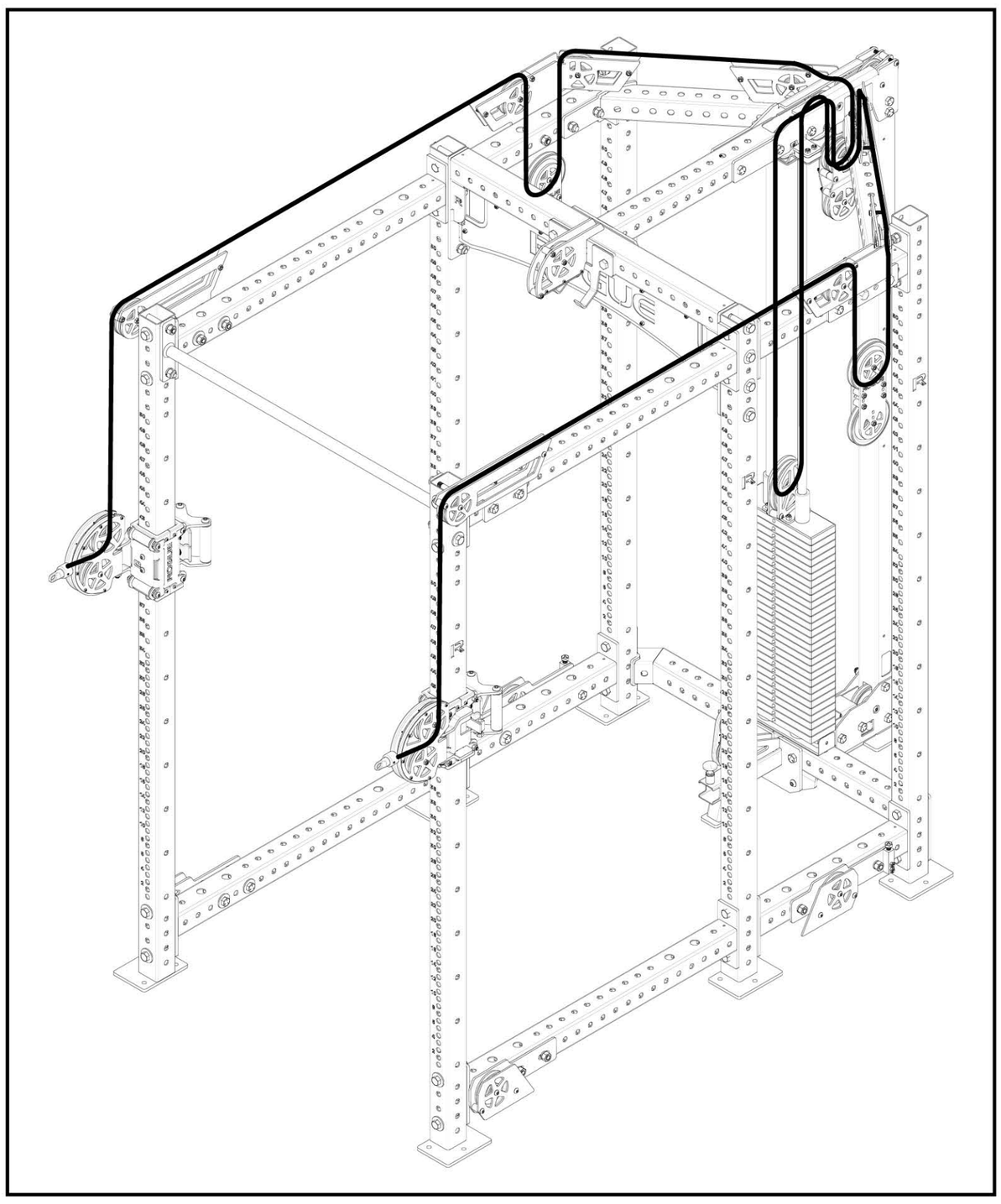

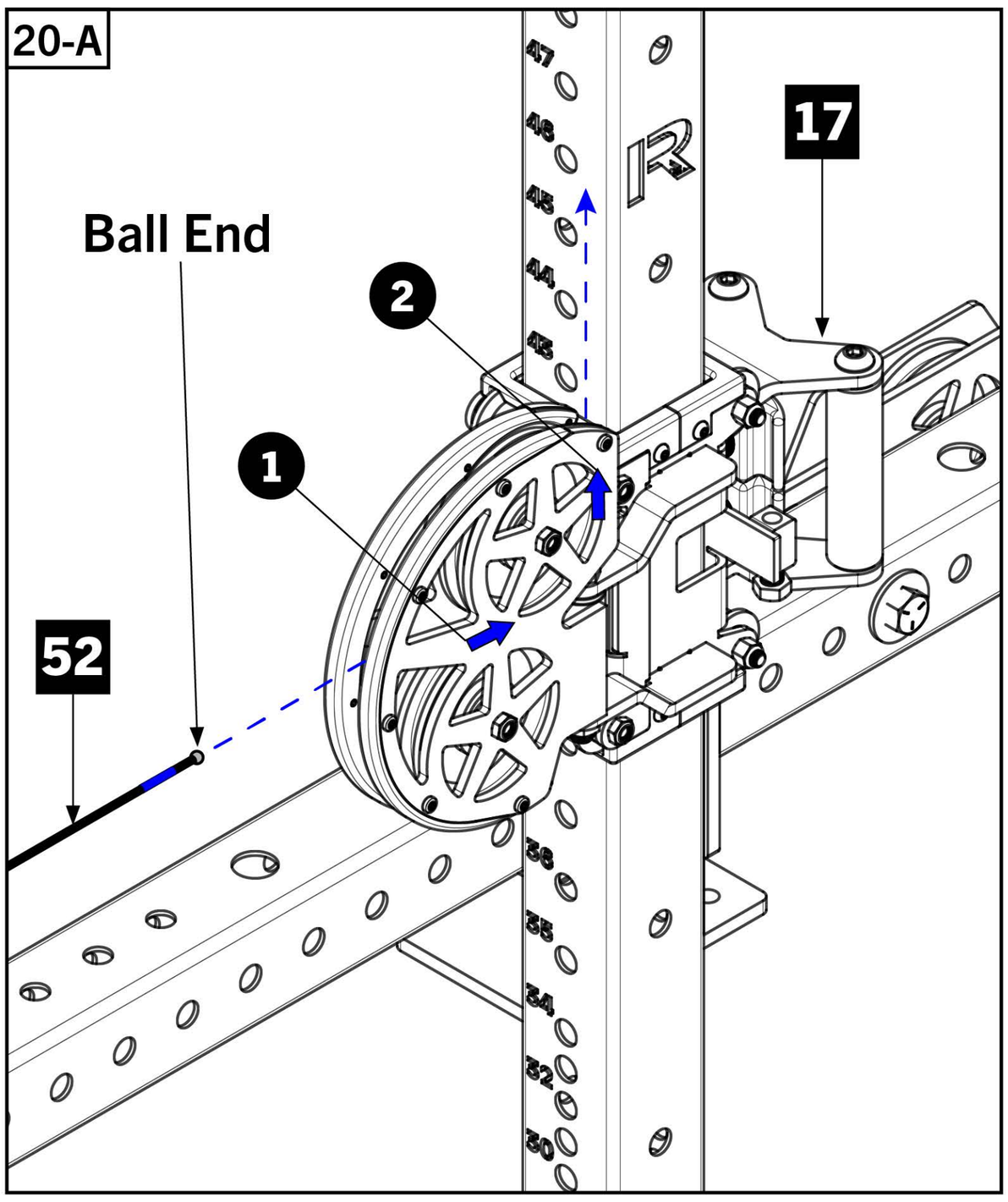

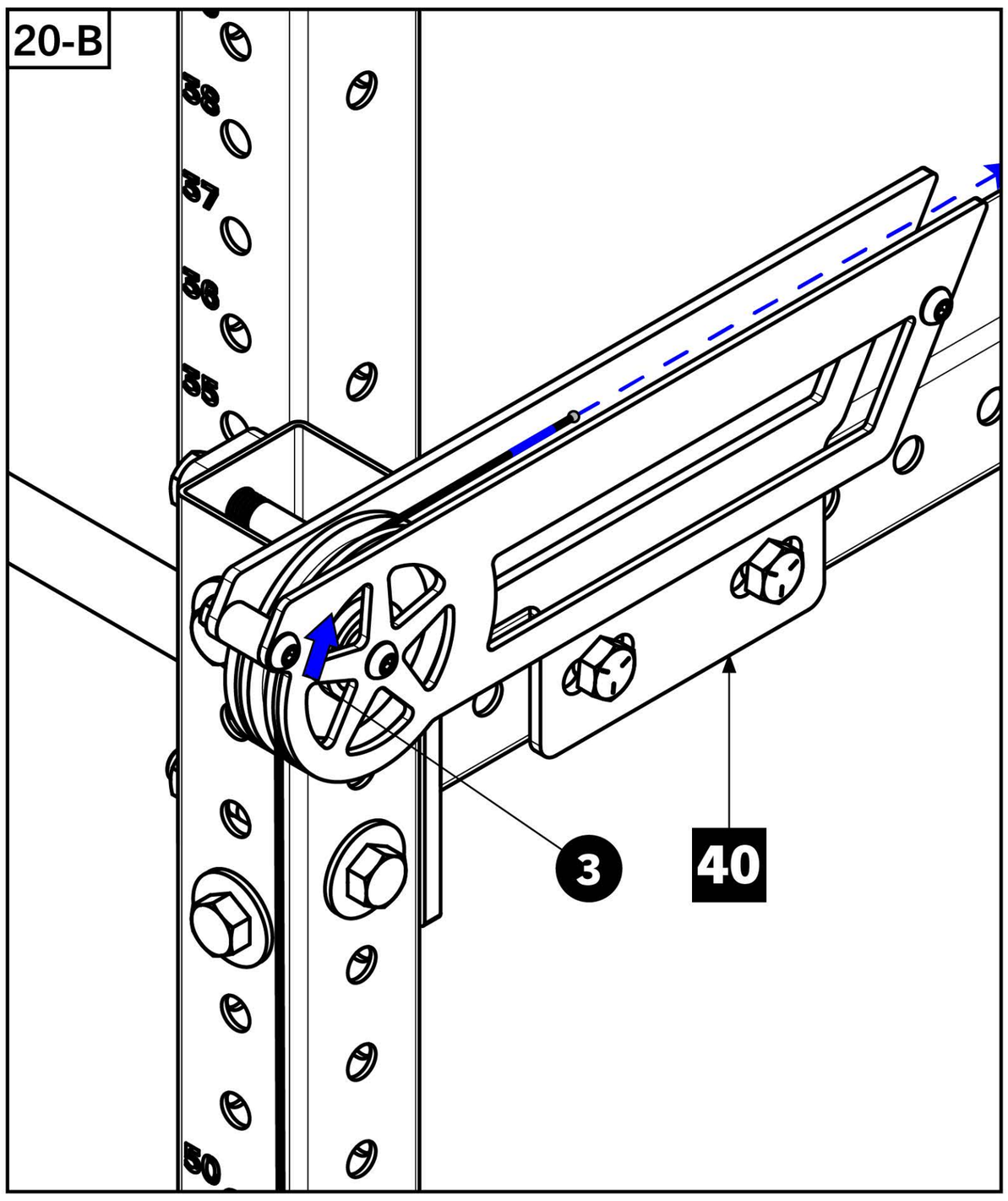

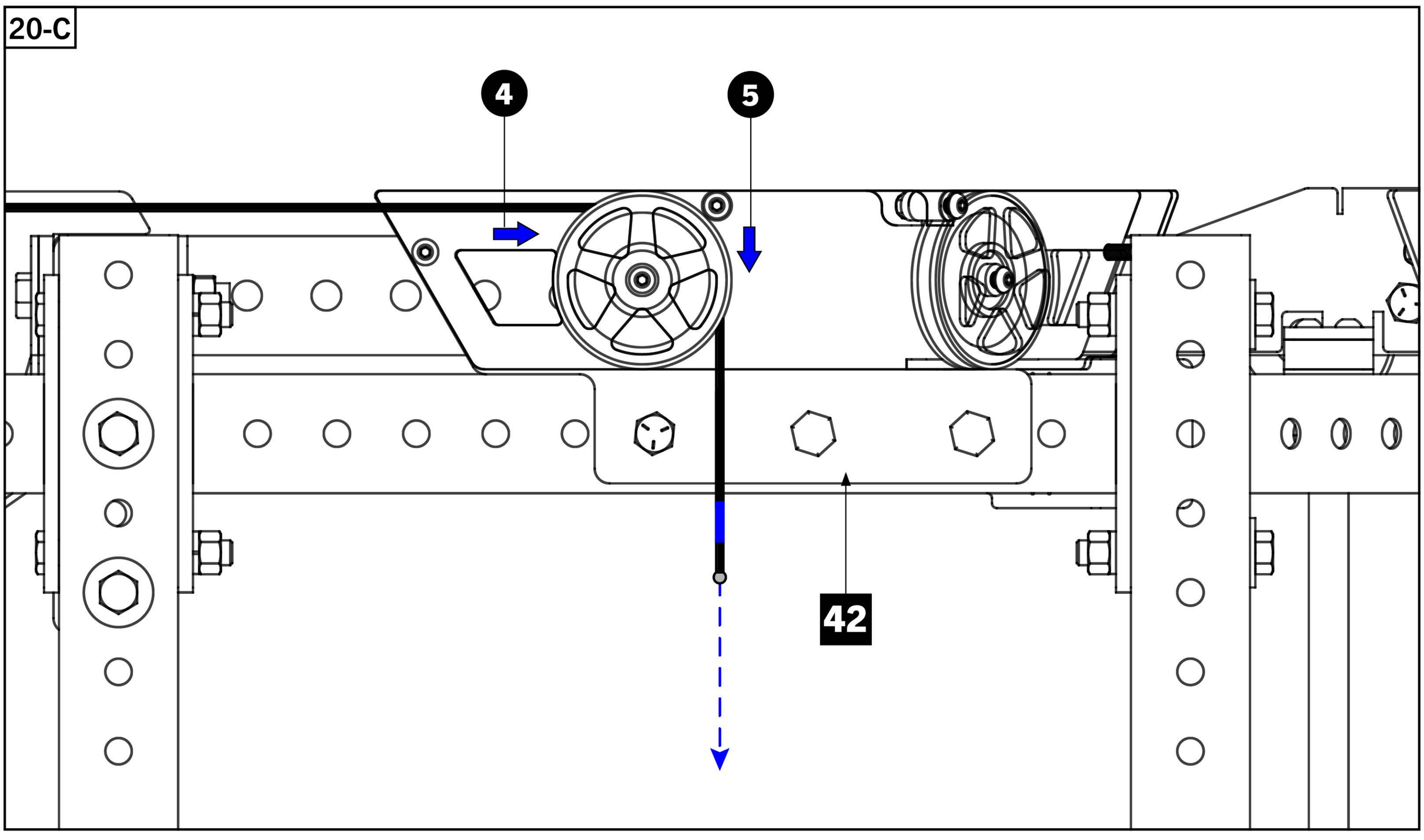

STEP 21

- Hold one Side Peanut Pulley [**49**] in the air, ensuring the arrow stickers correspond to diagram **21-A.**
- Feed the cable down and around the upper pulley of Side Peanut Pulley and then back up towards the Top Rear Side Pulley Assembly - RH [**42**].
- Feed cable around the angled pulley shown in **21-B** and continue towards the Rear 3X3 Upright.

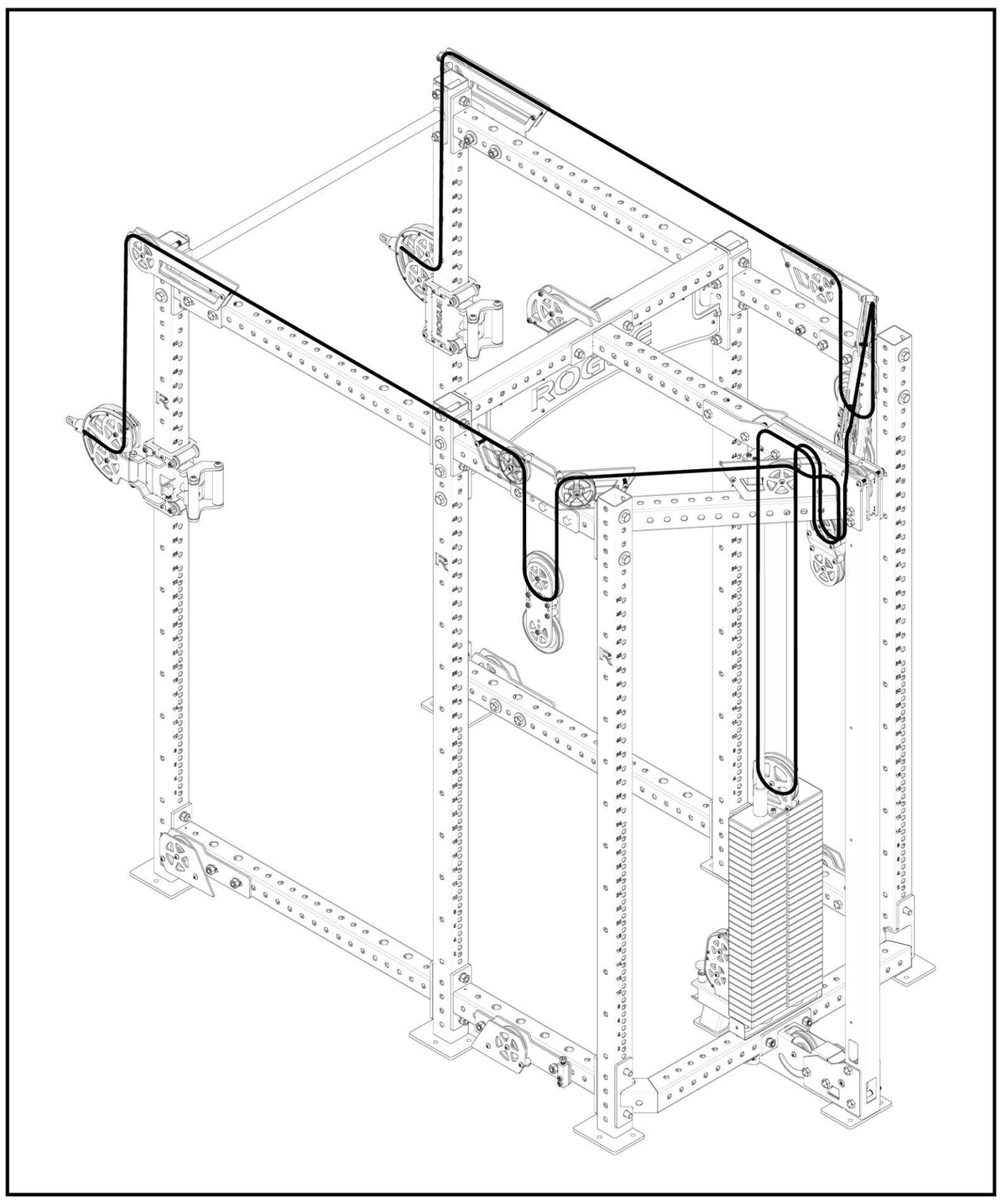

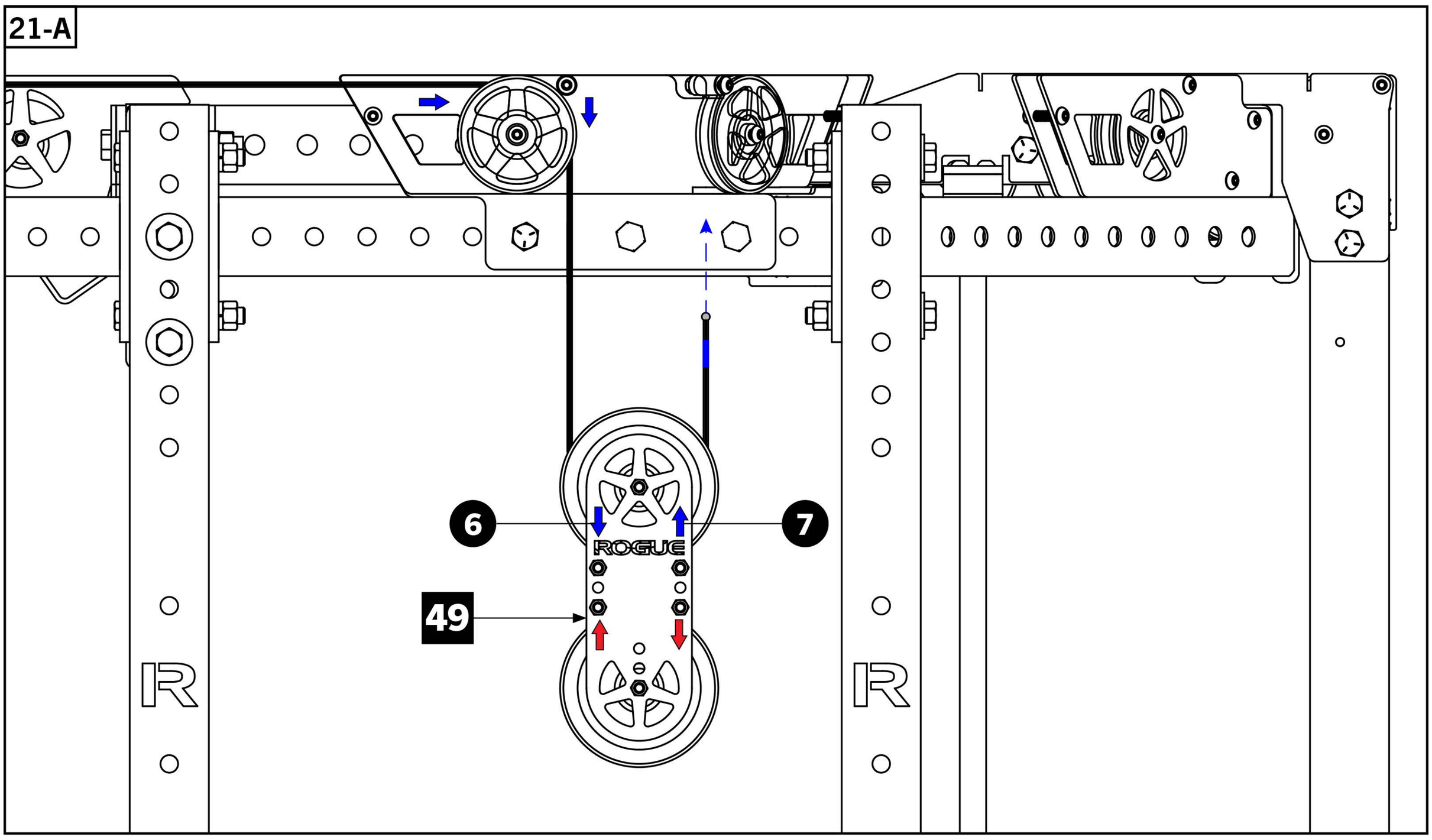

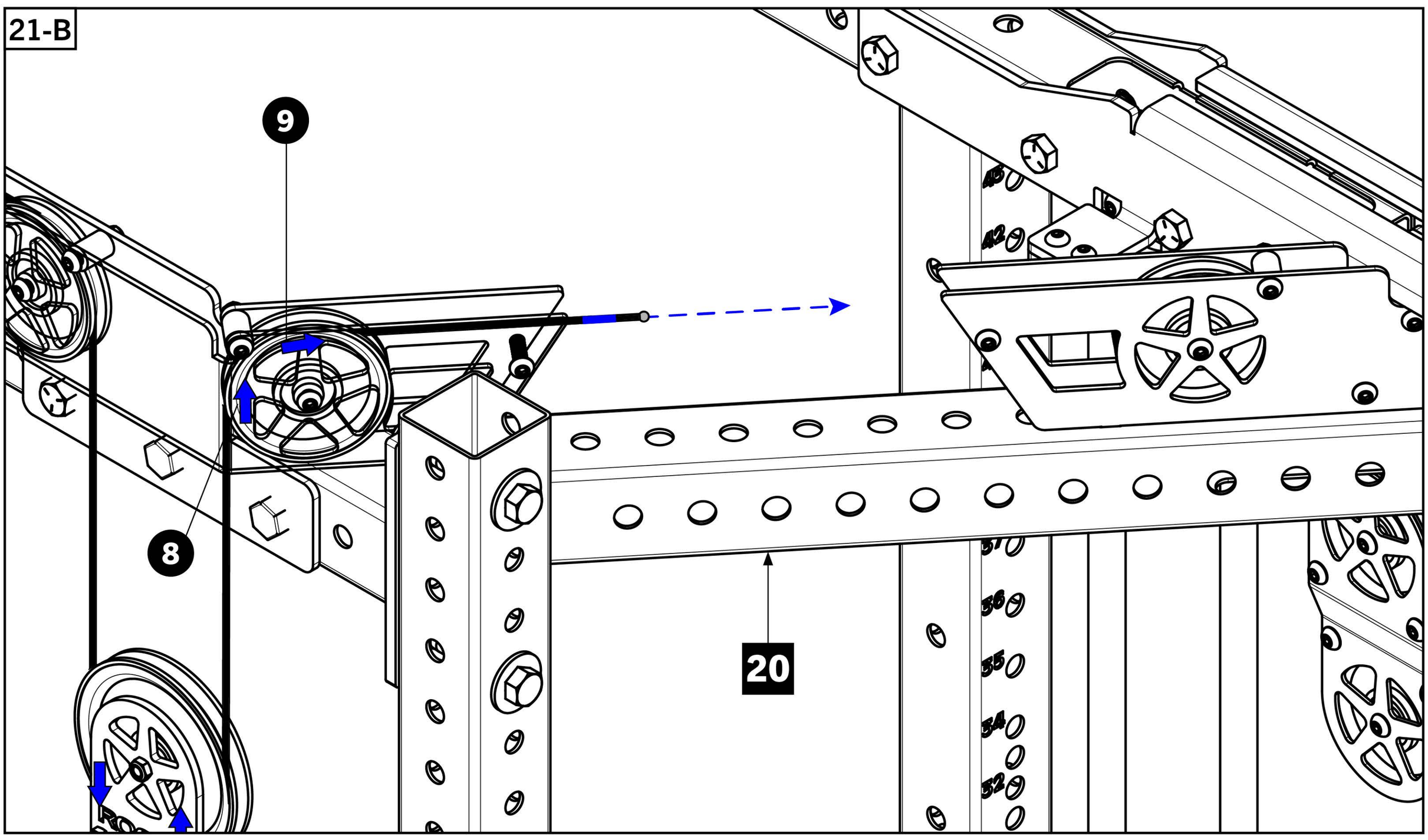

STEP 22

- Feed cable around the next angled pulley at rear of the Top Rear Angle Crossmember - RH [**20**] as shown.
- Hold the Rear Peanut Pulley [**48**] underneath cable, ensuring the arrow stickers correspond to diagram **22-B.**
- Feed cable around the upper RH offset pulley in the Peanut, and then back up and around the next two pulleys shown in **22-C**.

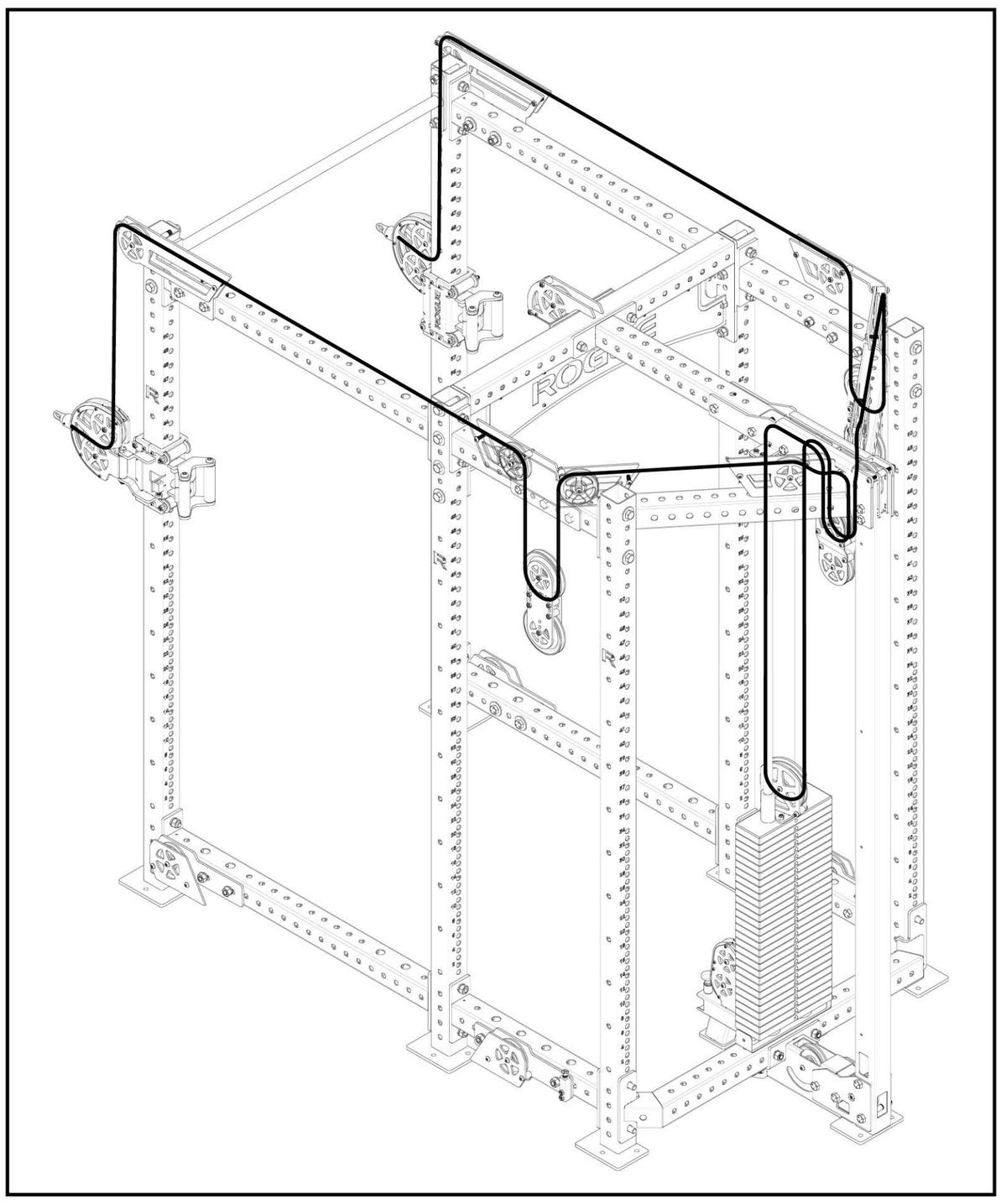

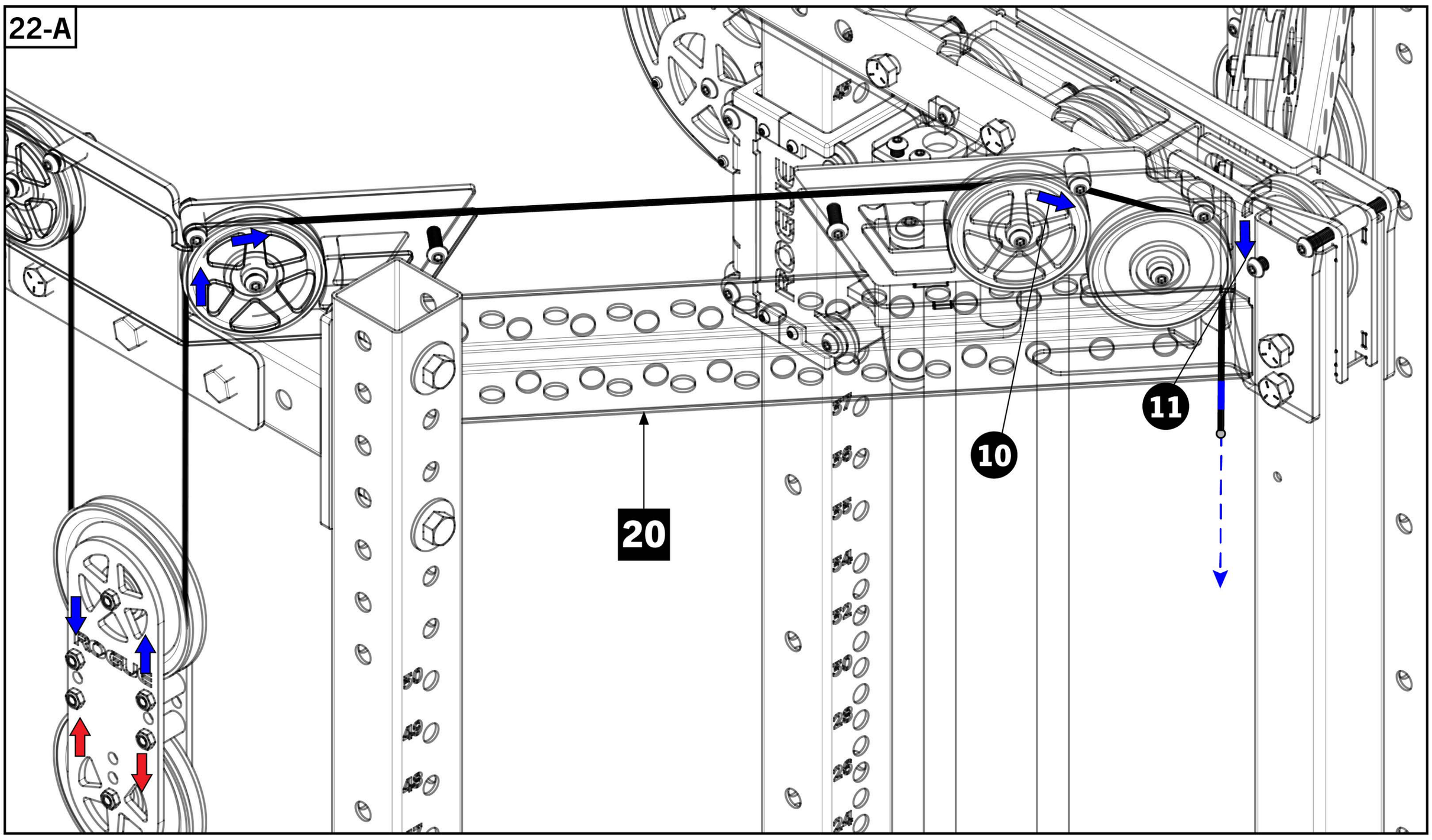

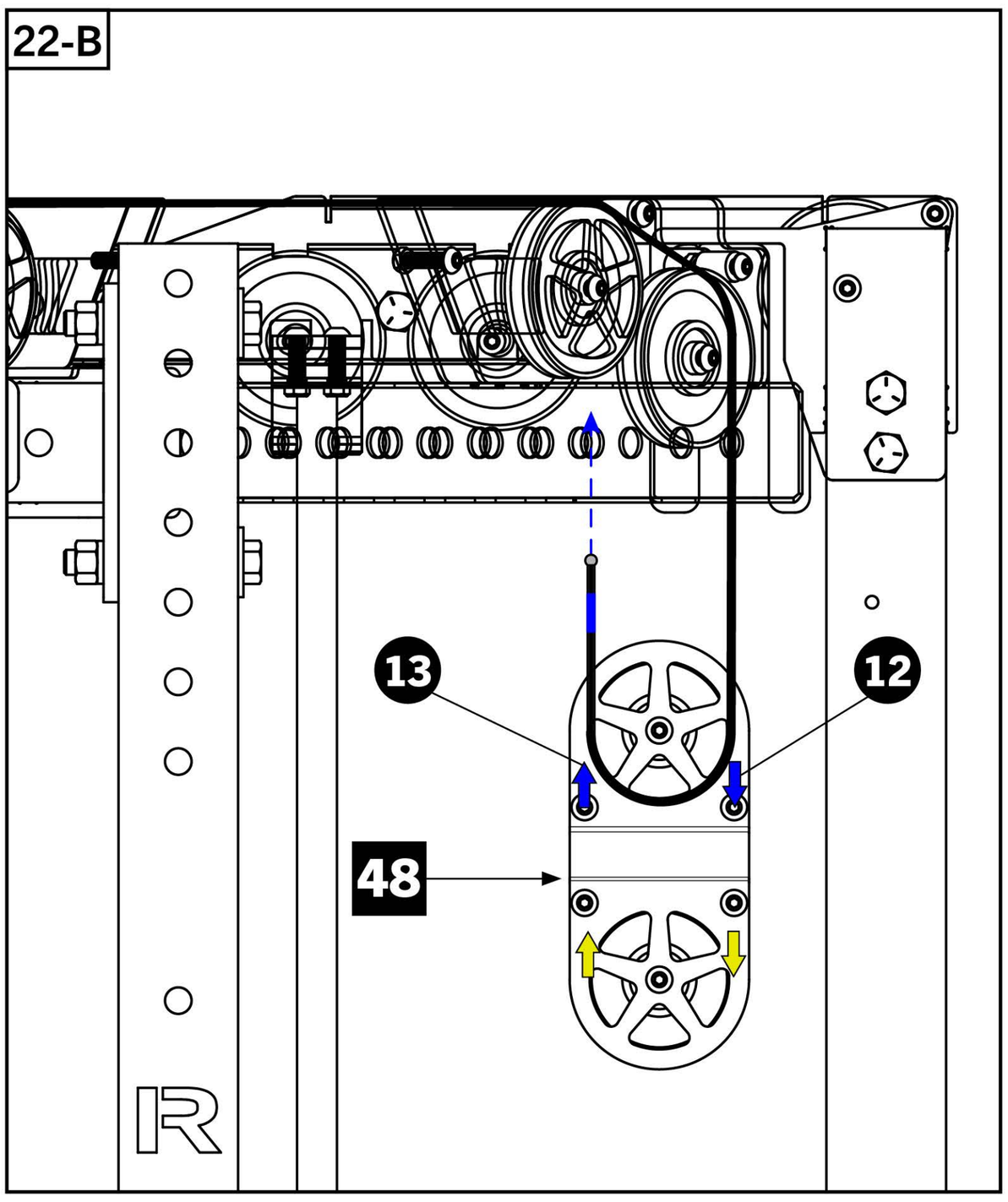

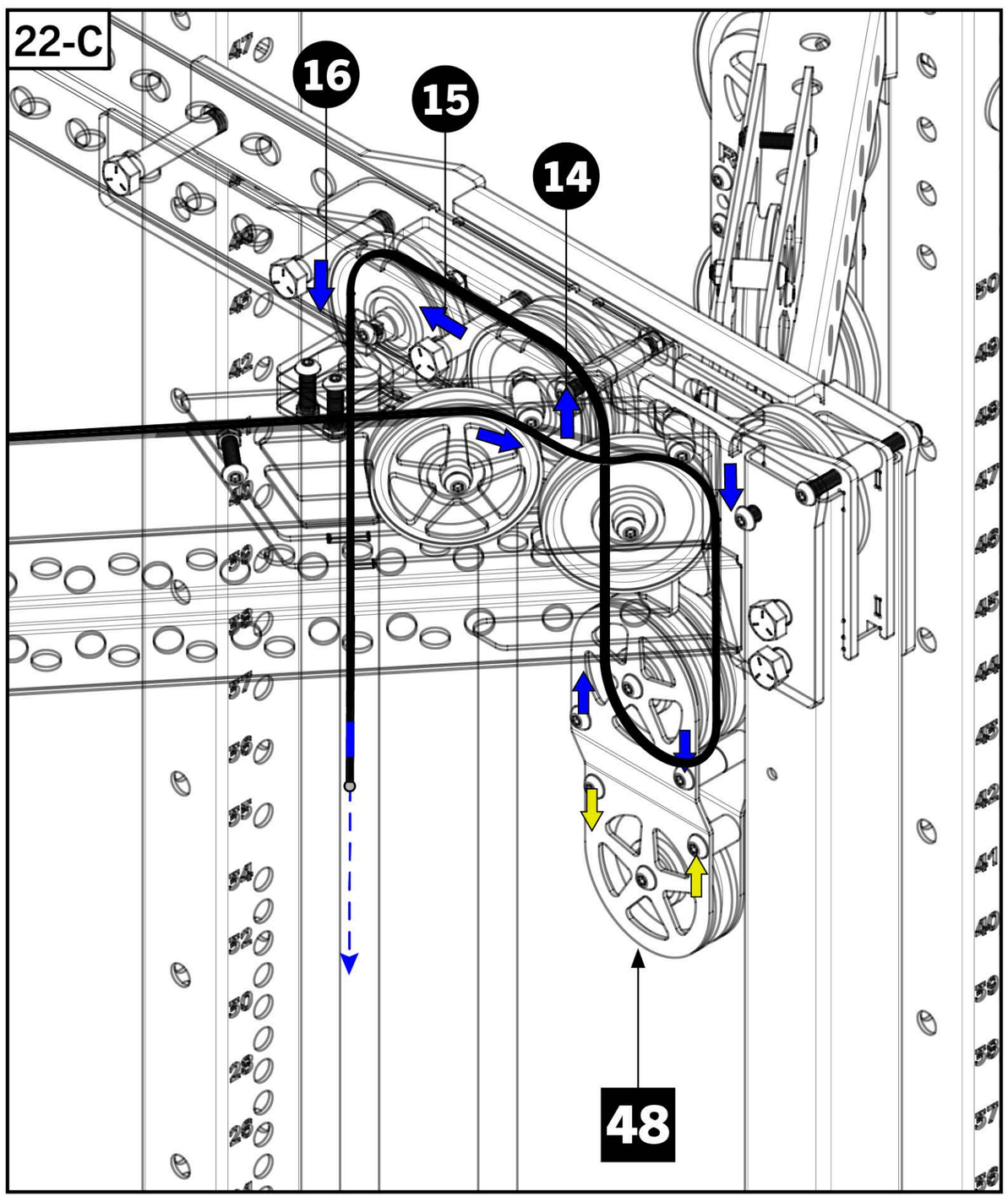

STEP 23

- Continuing down towards the Weight Stack, feed cable around the large 6” Pulley located on top of the Weight Stack Stem. **Tip:** a flathead screwdriver may be used to help guide cable through turn 18.
- Feed cable back up to the Top Center Crossmember, feeding around the pulley shown in **23-B** and then immediately back down towards the Rear Peanut Pulley [**48**].
- Continue around the other Top Pulley on the peanut and then back up and around the pulley shown in the Rear Angled Cross-member - LH [**21**].
- Continue around the next angled pulley located in the Top Rear Side Pulley Assembly - LH [**43**] and then downward.

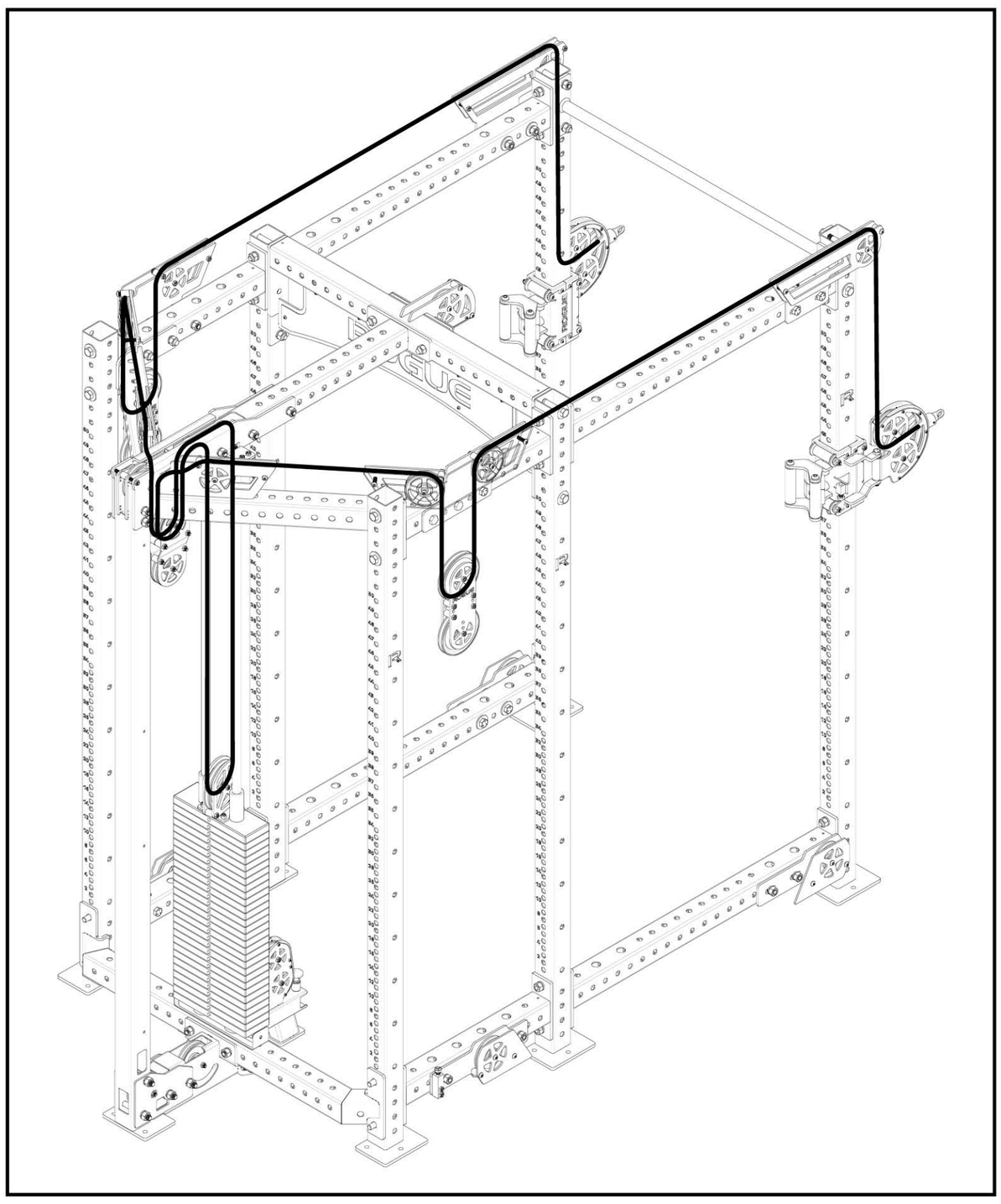

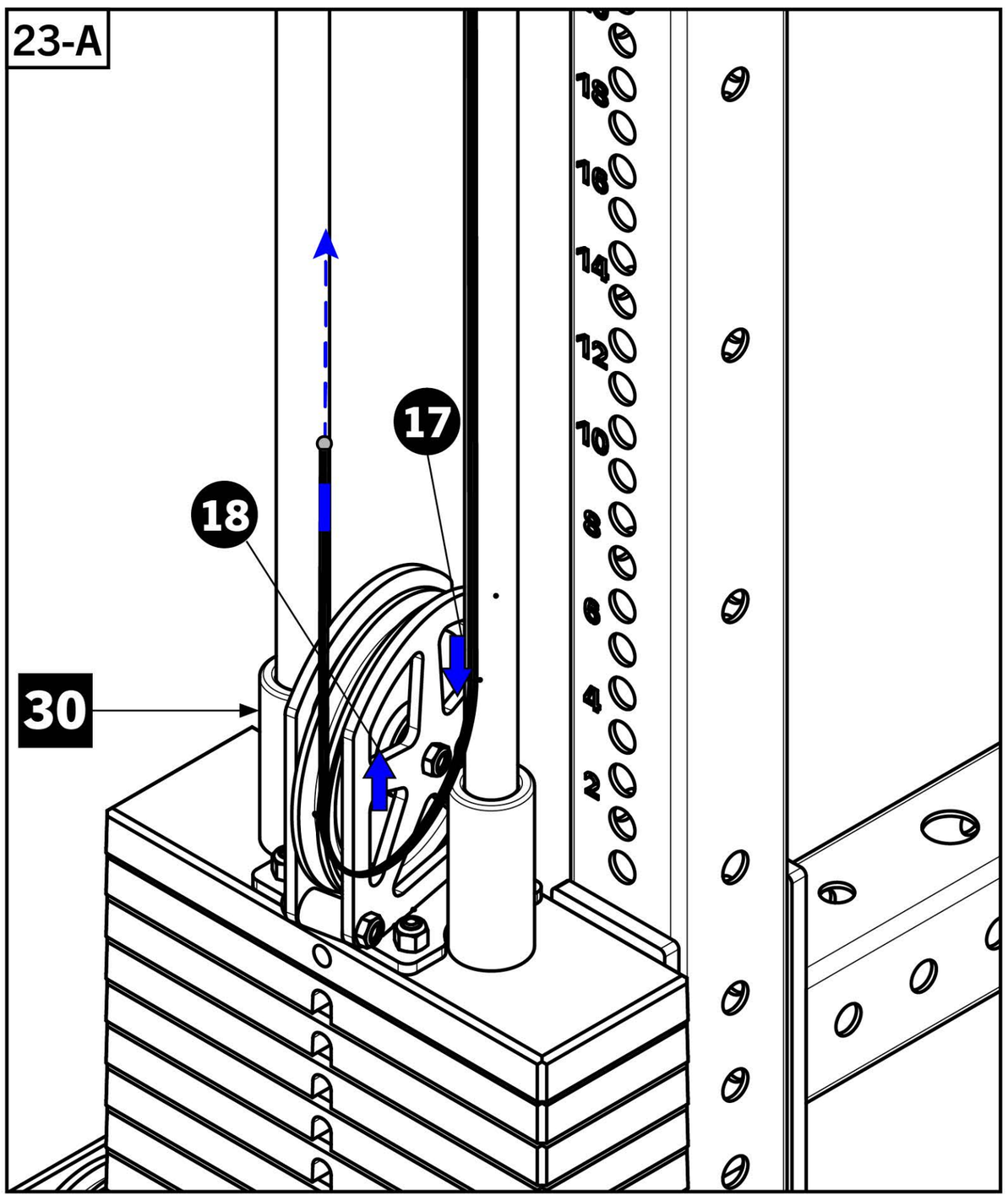

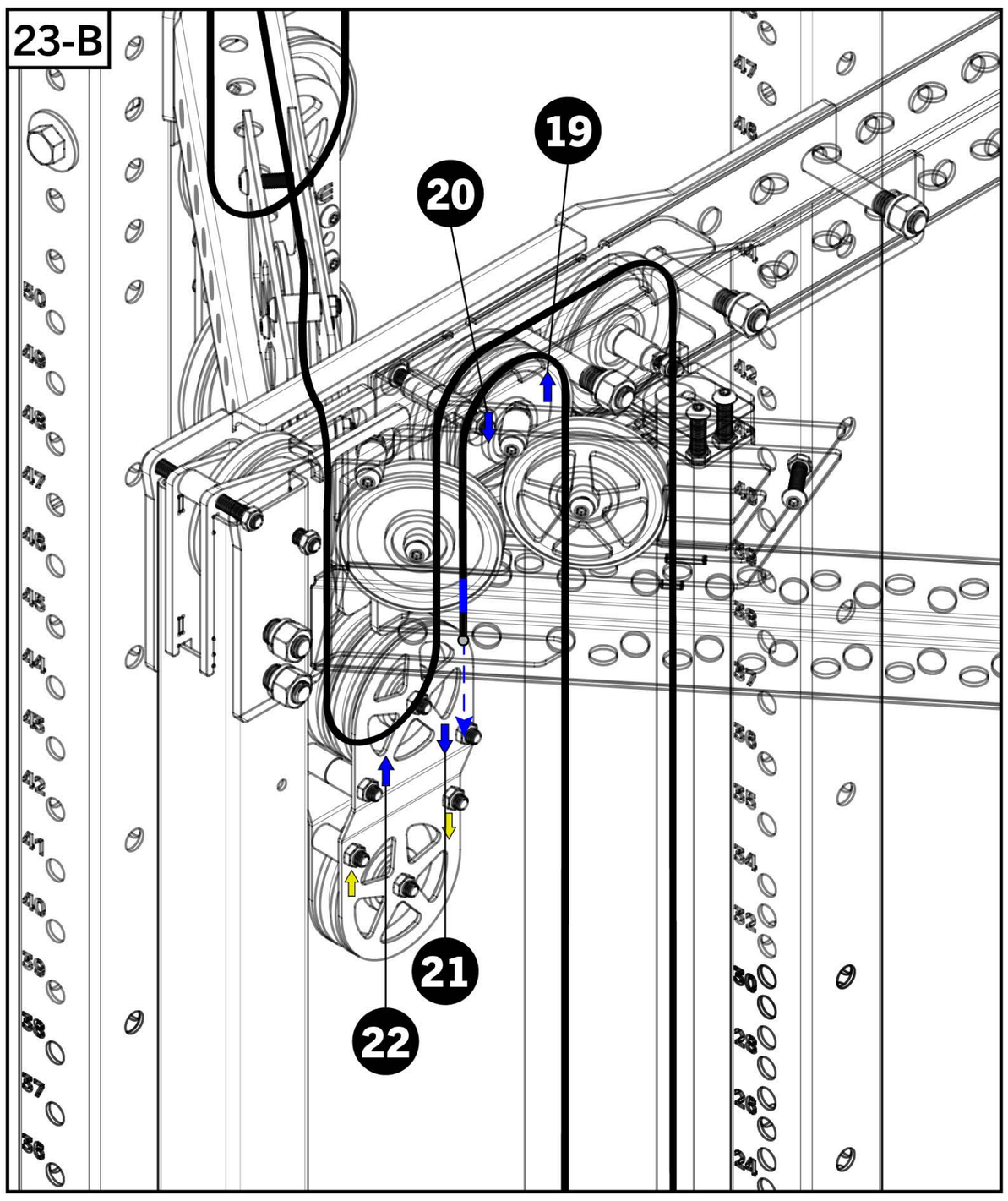

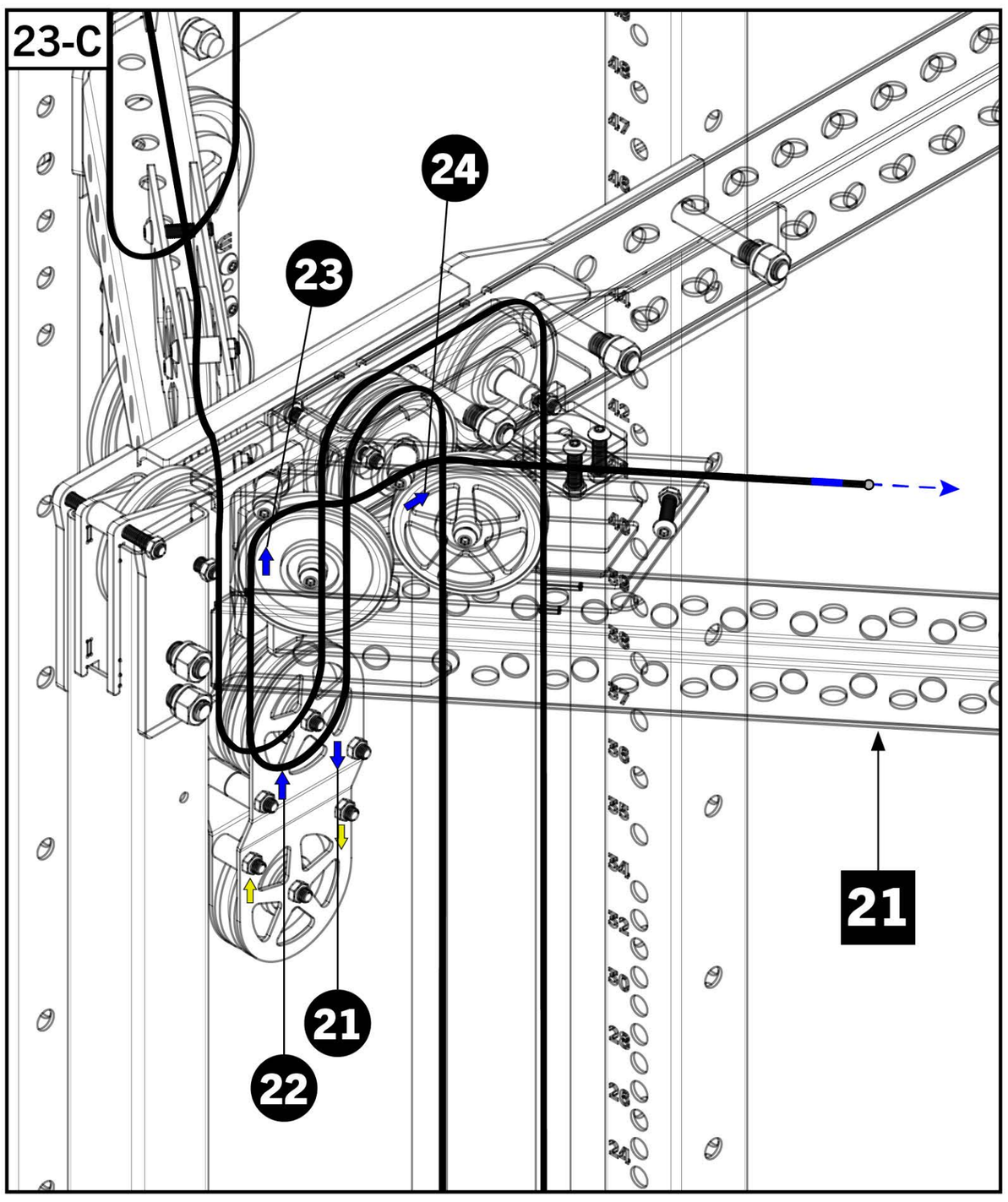

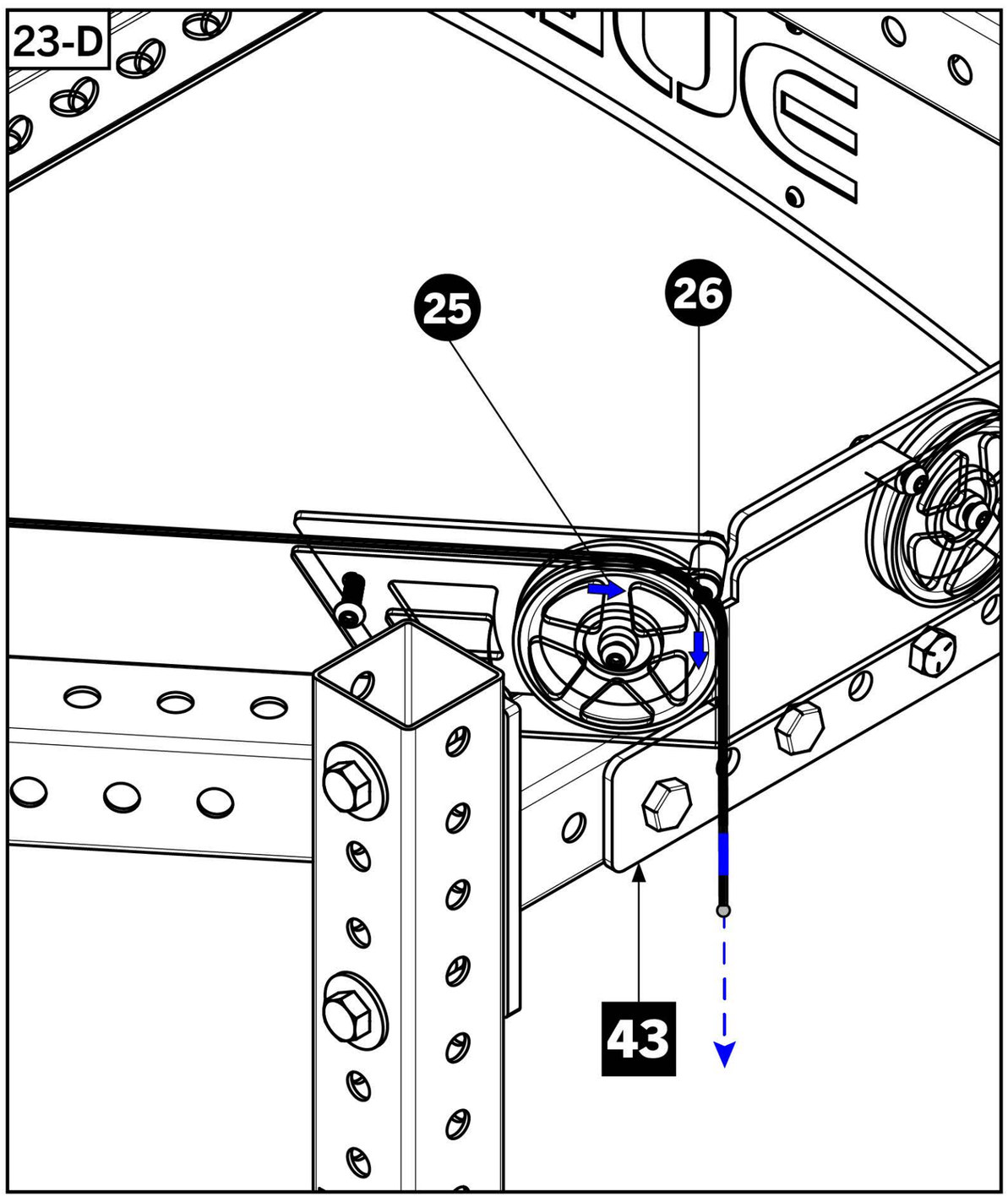

STEP 24

- Hold the remaining Side Peanut Pulley [**49**] in the air, ensuring the arrows correspond to diagram **24-A**.
- Feed cable around the upper peanut pulley and then back up towards the Rear Side Pulley Assembly - LH [**43**].
- Feed around the pulley shown in **24-B** and then towards the front of the rack.
- Continue around the Top Front Side Pulley Assembly - LH [**41**], then down and out through the front of the Swivel Trolley LH [**18**].
- Pull Ball End of cable out far enough to assemble Clevis on next step.

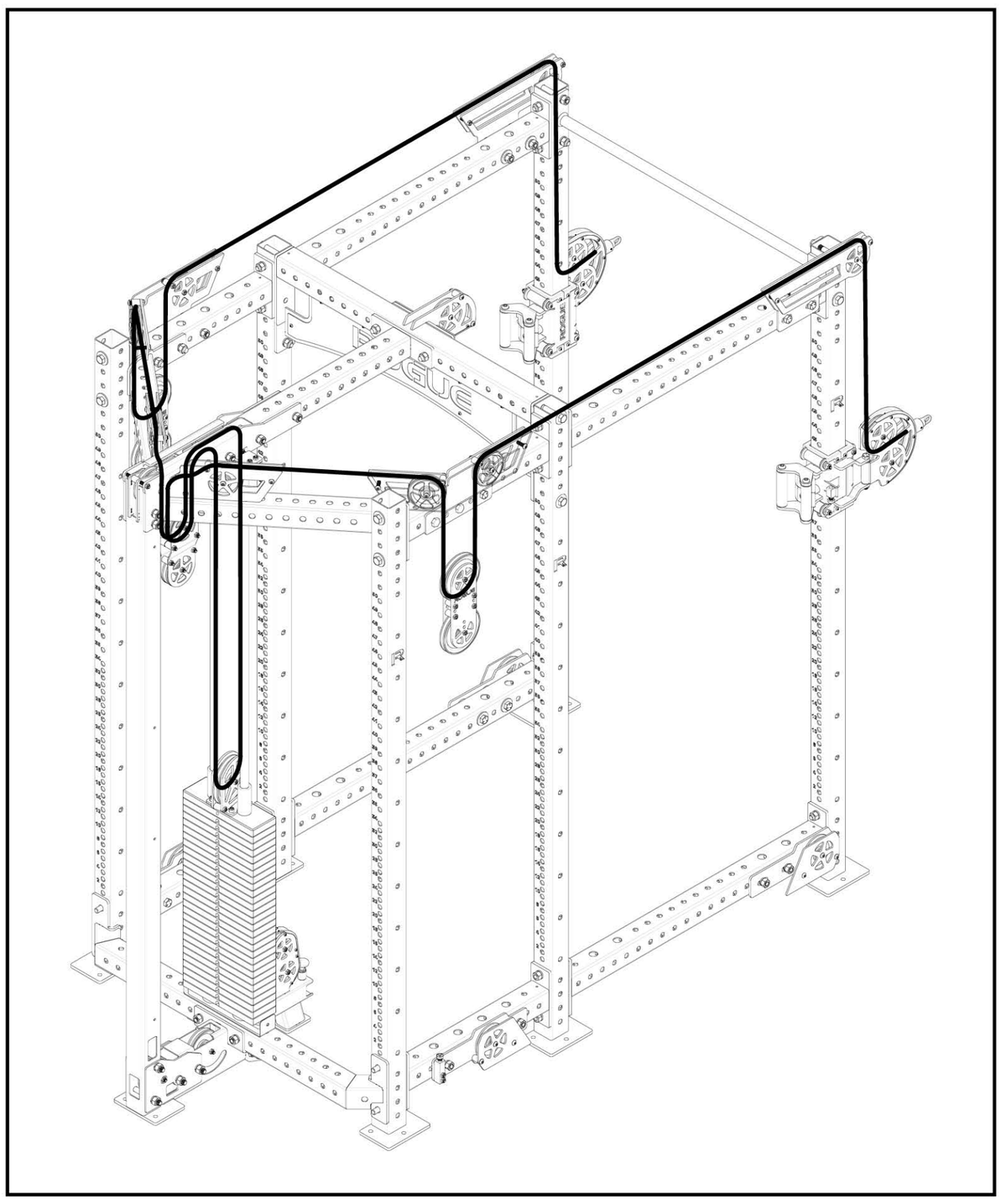

24-A

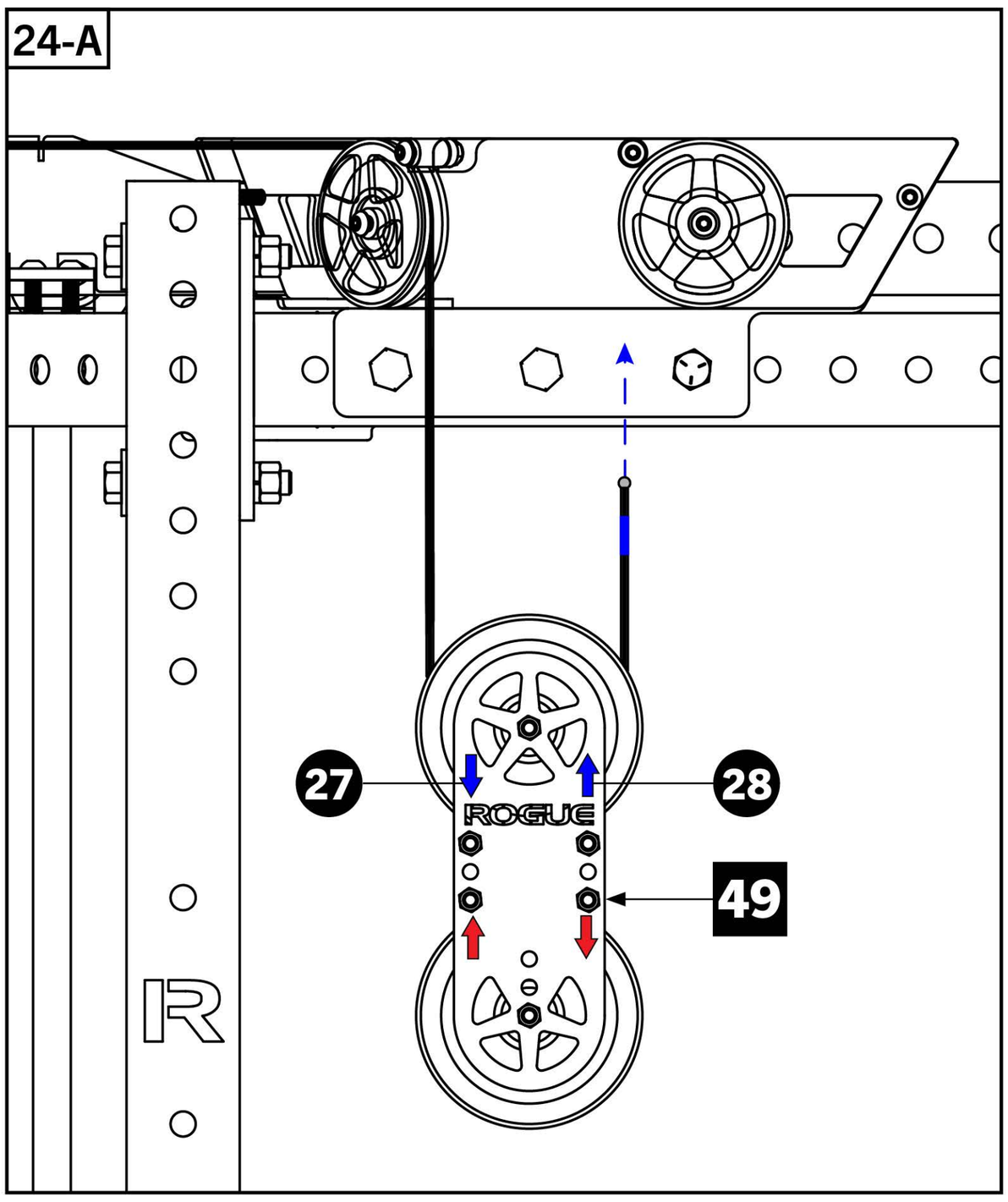

24-B

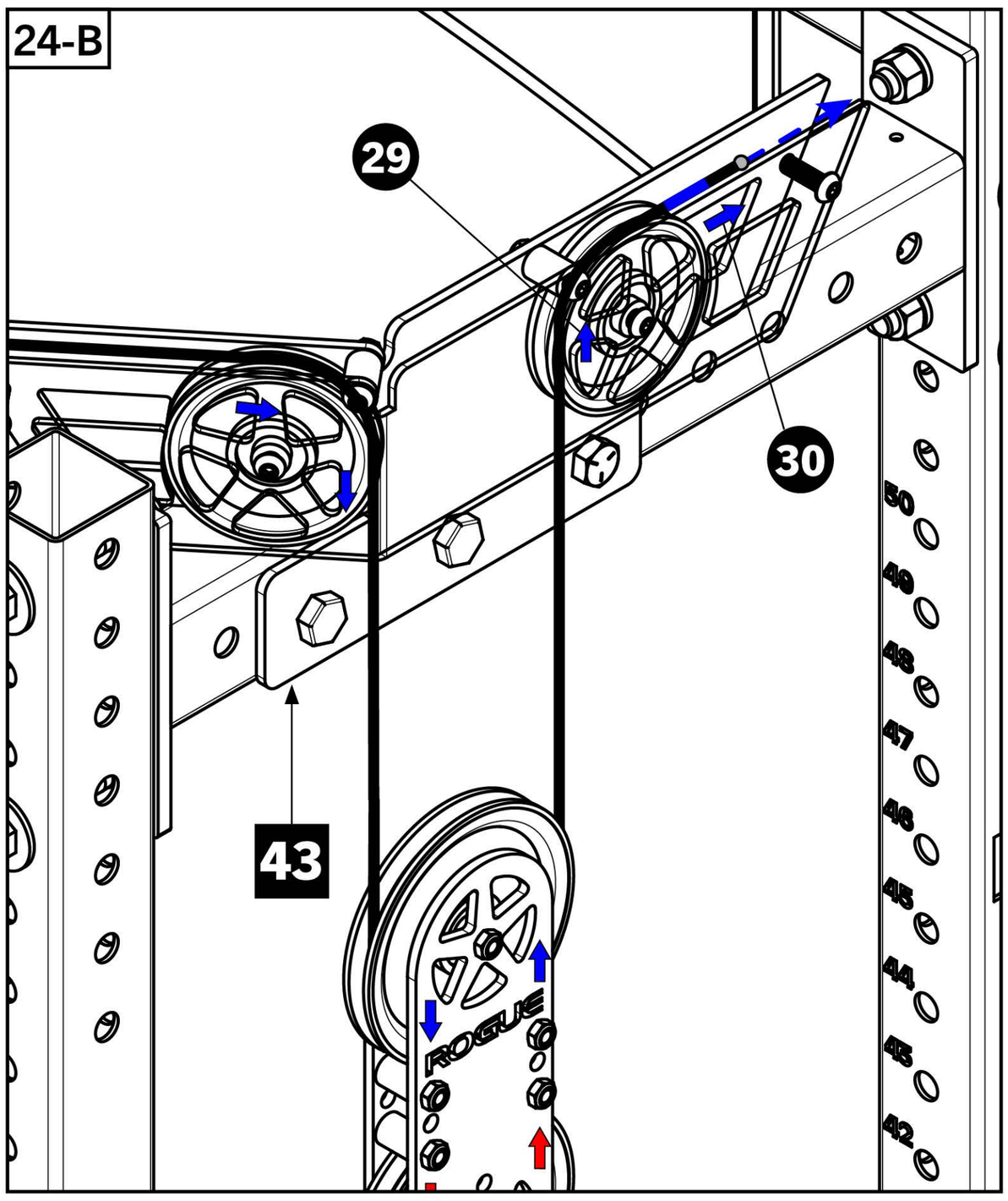

24-C

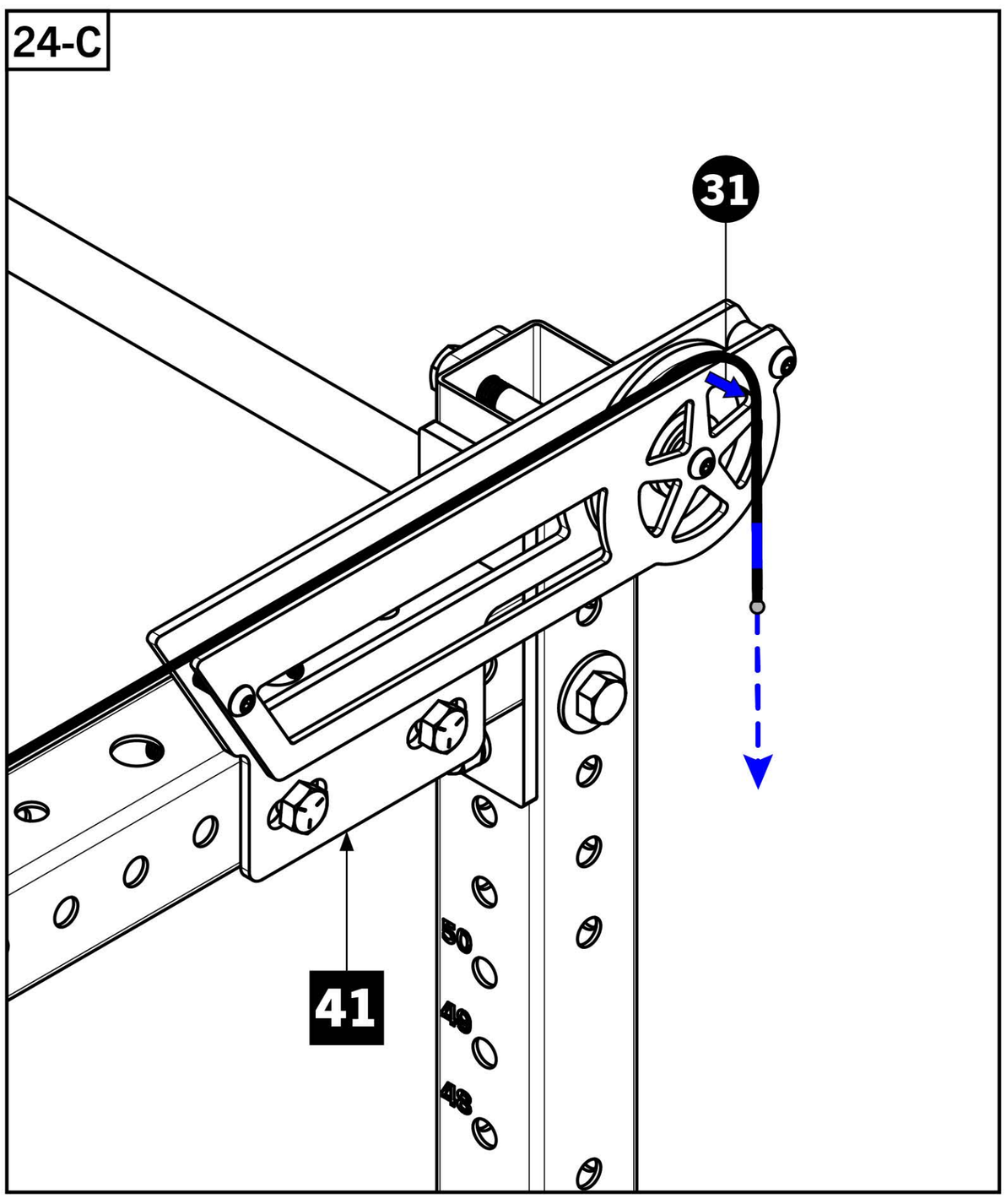

24-D

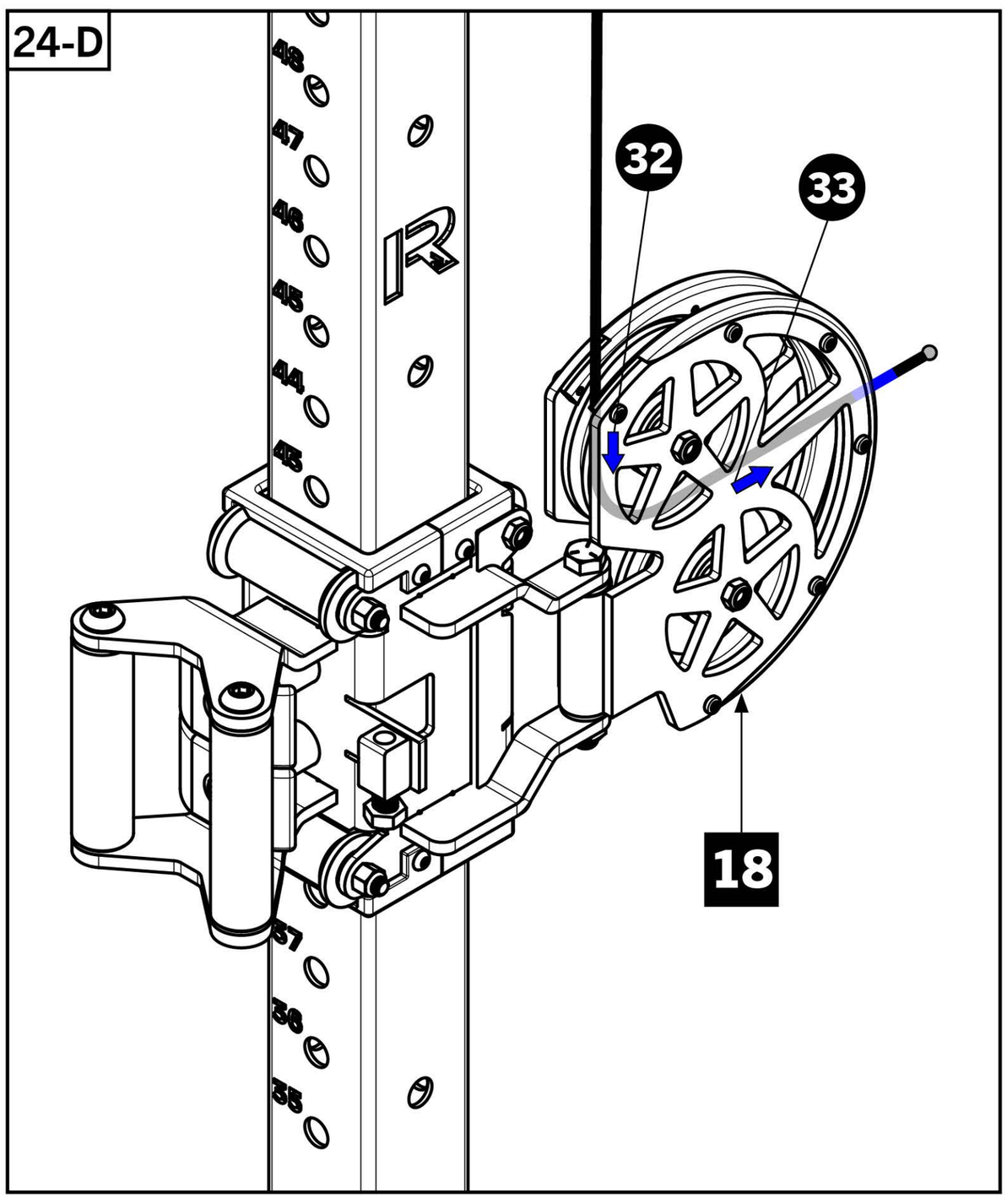

STEP 25

Tools Required:

- 3/32” Allen Key & 5/8” Wrench
- Completely disassemble the loose Clevis included with cable by unscrewing set screws and Split Threaded Insert, and remove blue tag on end of cable.
- Slide parts over the ball on cable as shown on **25-B.**
- Insert Grommet into non-threaded side of Split Threaded Insert and screw Clevis End on threaded side using 5/8” Wrench.
- Slide Plastic Stop forward and align outer holes with threaded holes on Clevis End and re-insert Set Screws. Fully tighten Set Screws.

25-A

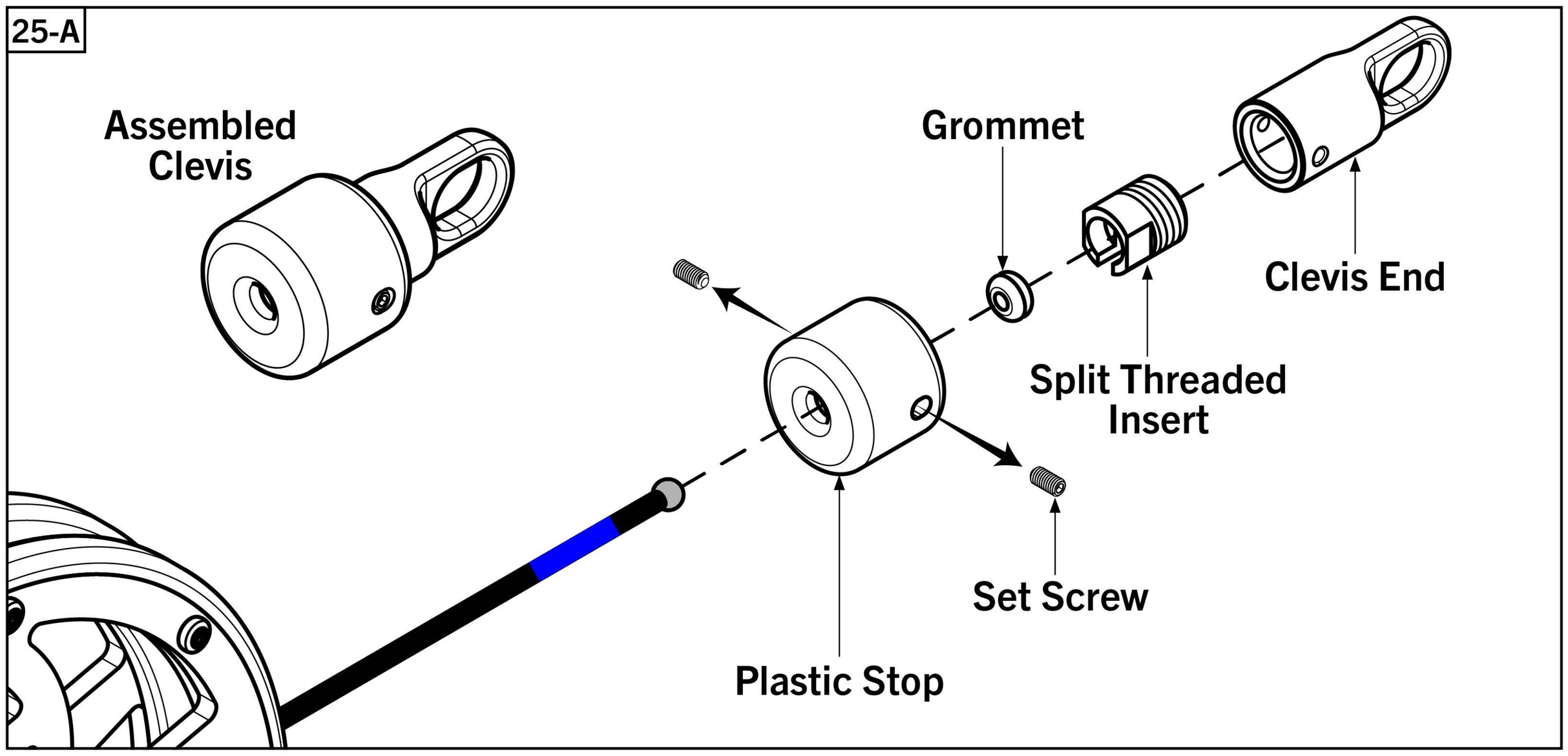

25-B

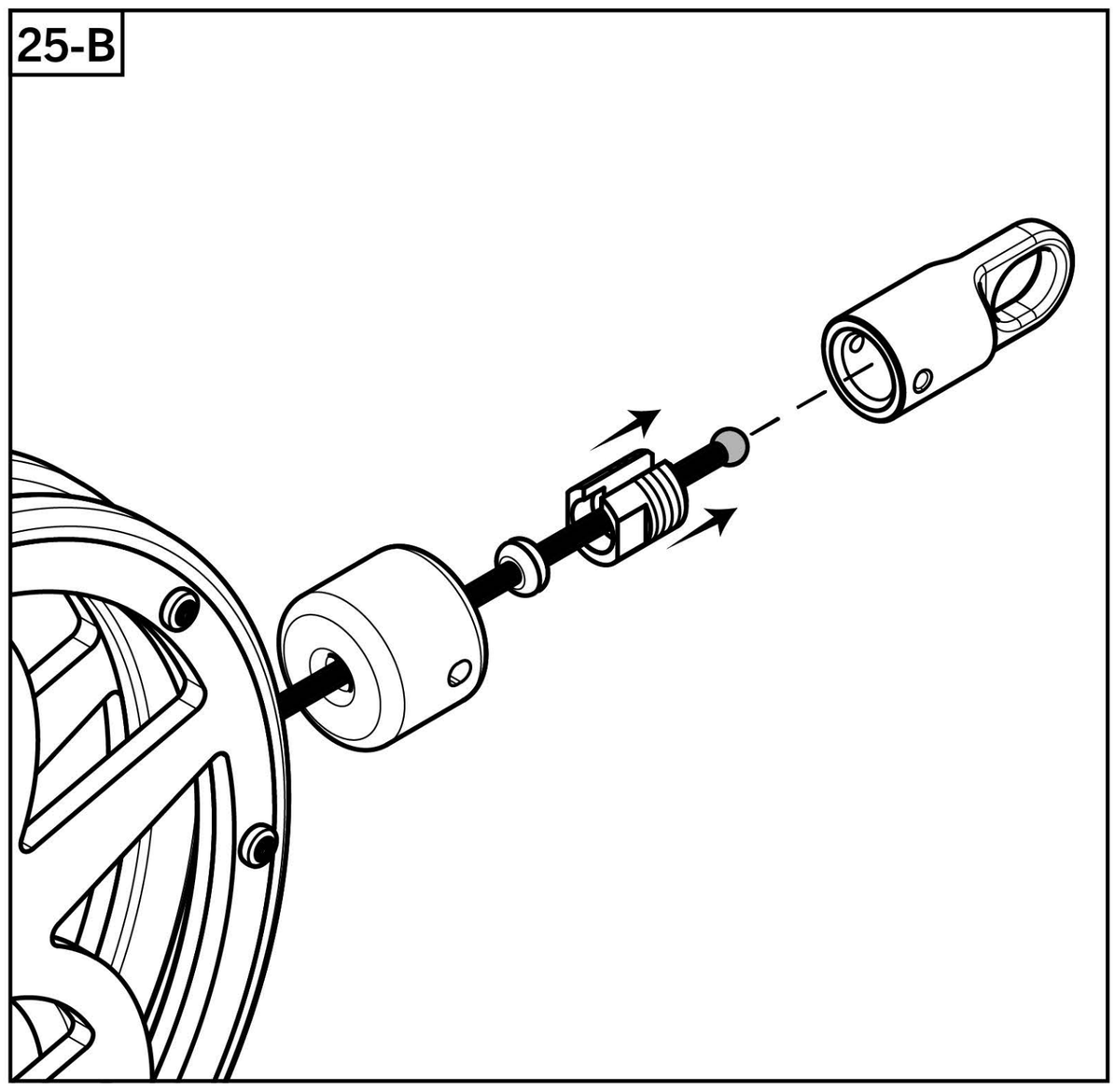

25-C

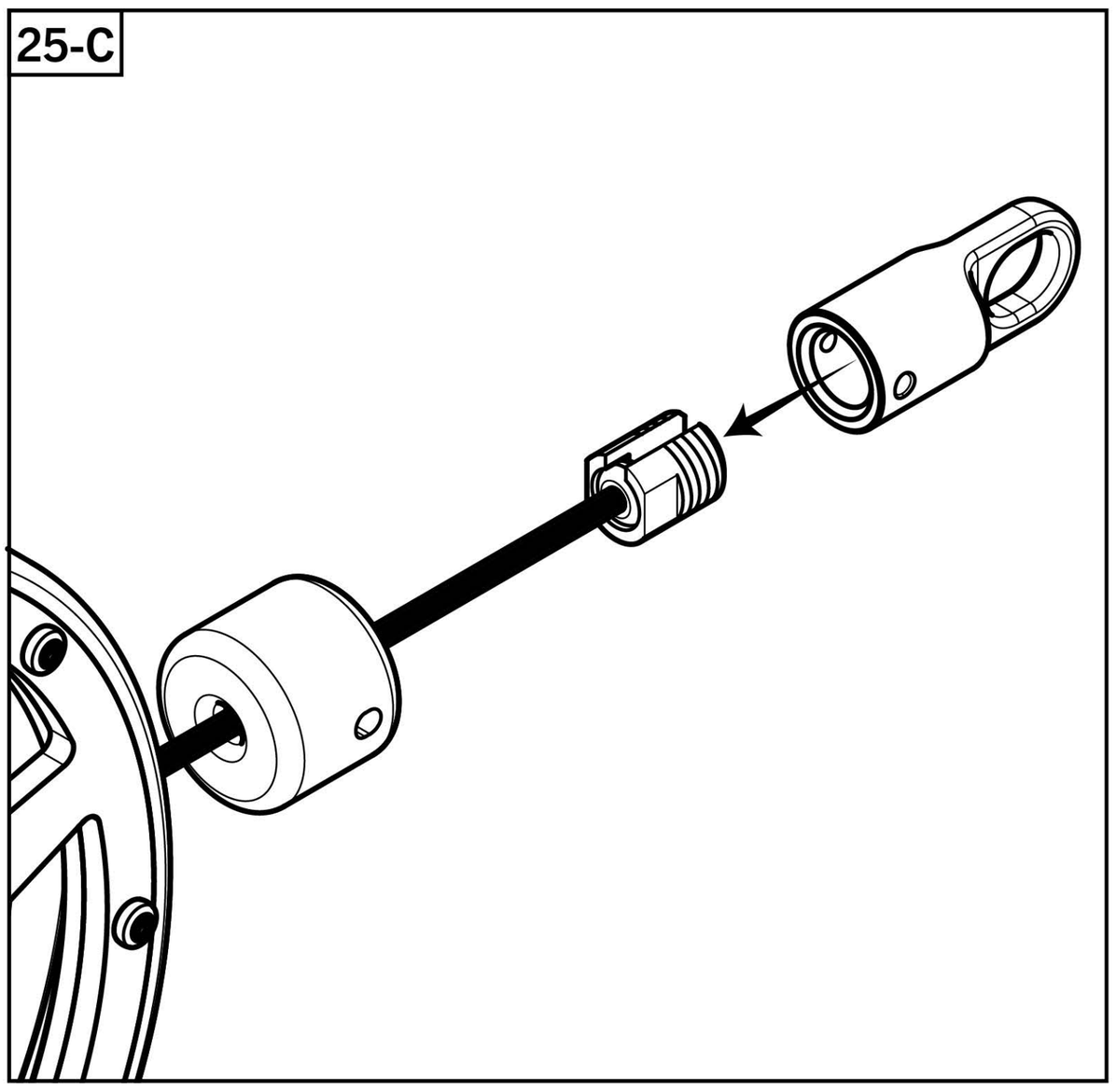

25-D

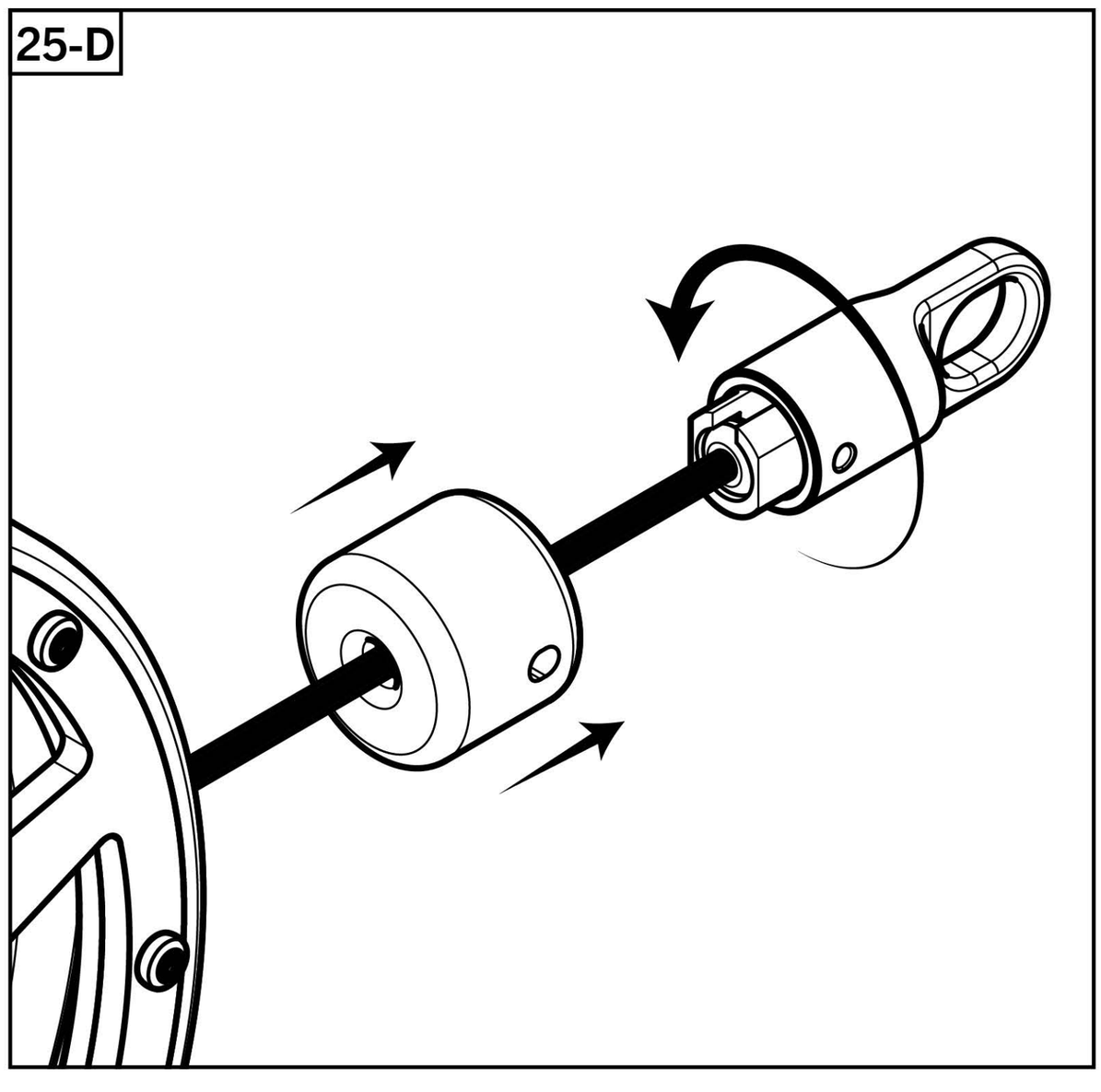

25-E

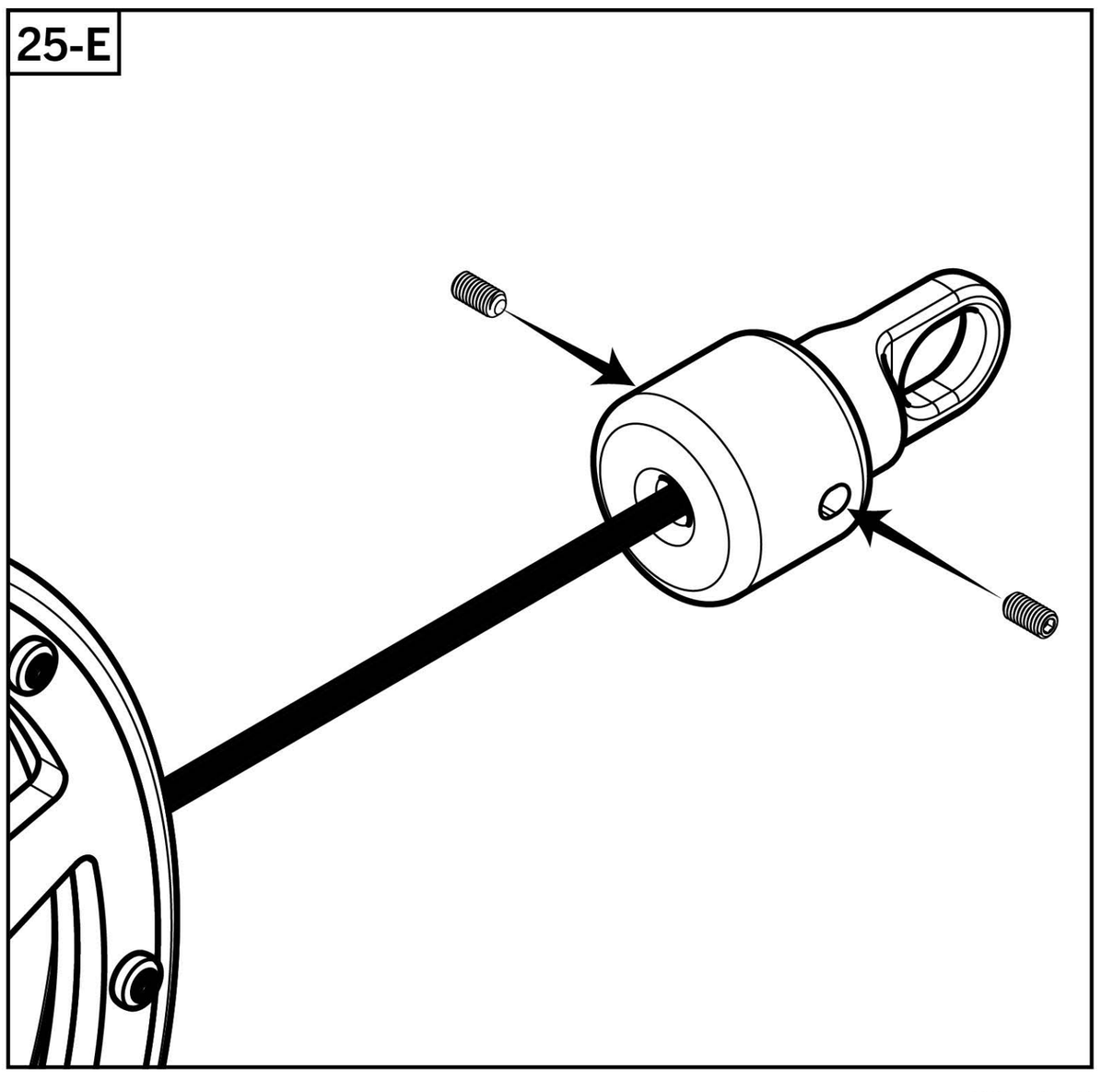

STEP 26

Note:

- Completely unwind and straighten out Lat Pull Cable [**53**] to remove any twists/kinks prior to installation.
- Next assemble the Lat Pull/Low Row cable indicated by the yellow indicator on Ball End of cable and corresponding yellow arrows shown in **STEPS 26-28.**
- Feed the Ball End of Lat Pull Cable [**53**] up and over the pulley in Lat Pulldown Pulley Bracket [**24**] and then towards the back of the rack.
- Feed around the pulley in the top of Rear 3X3 Upright [**15**] and then all the way down, ensuring cable runs INSIDE THE UPRIGHT.

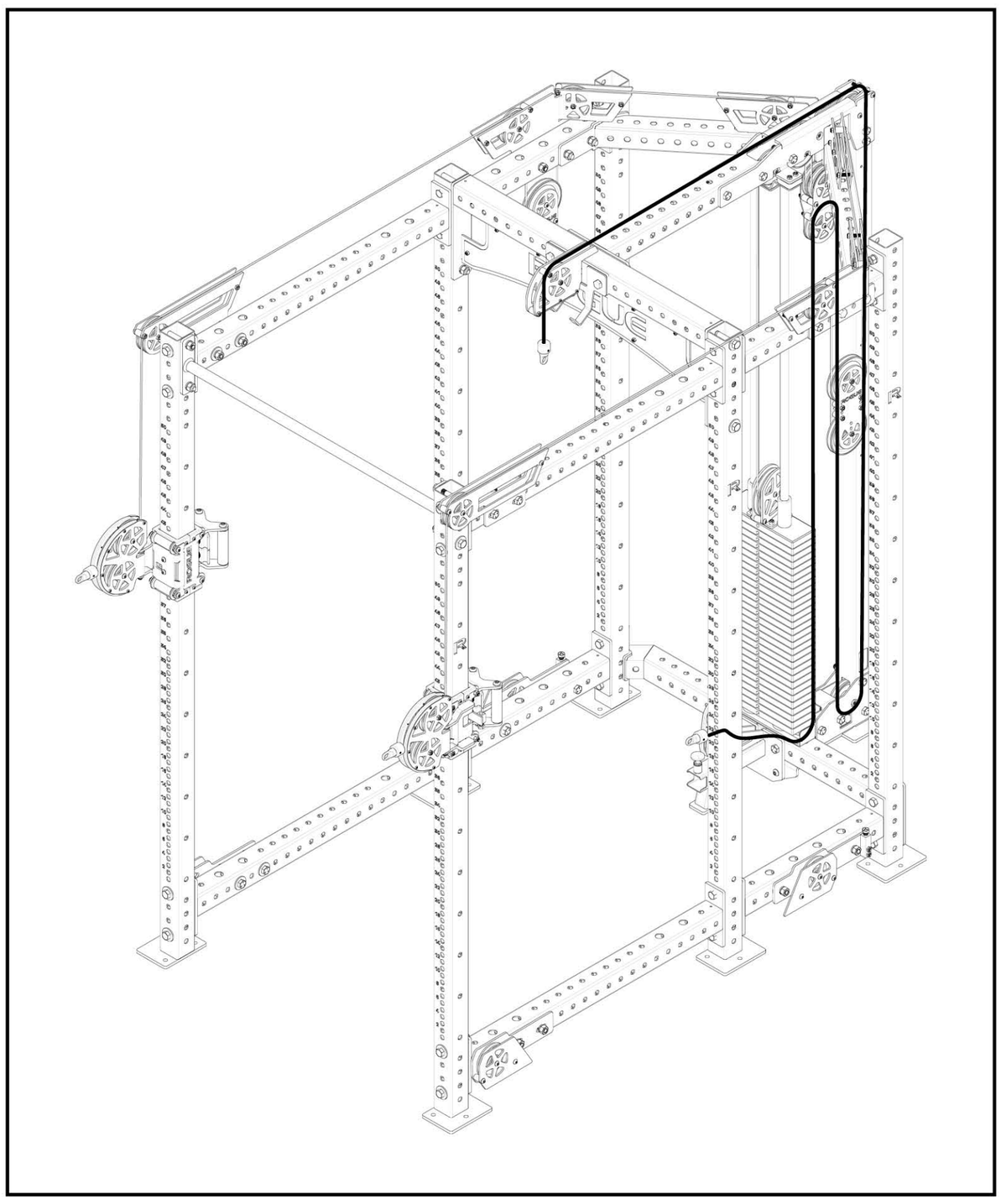

26-A

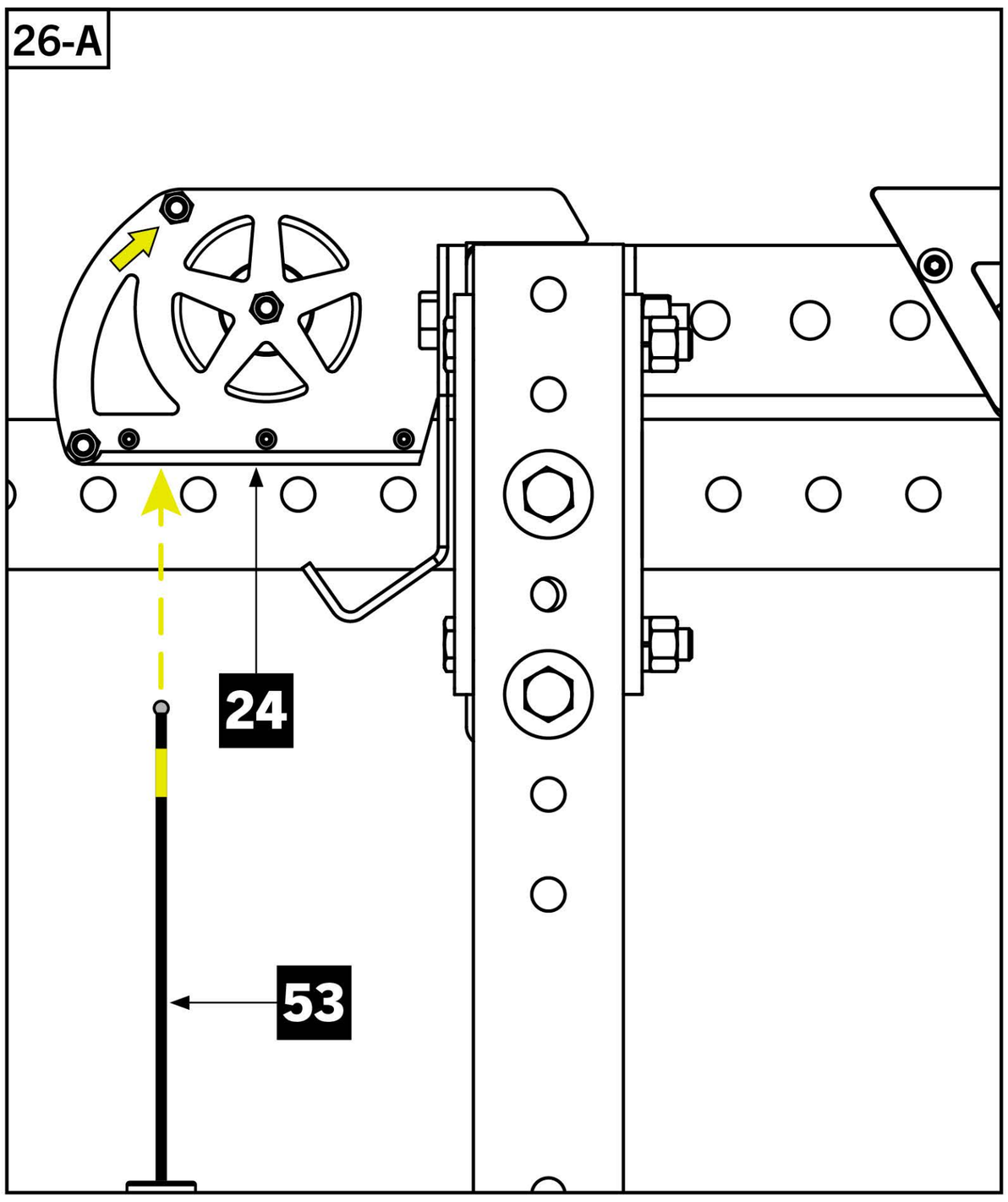

26-B

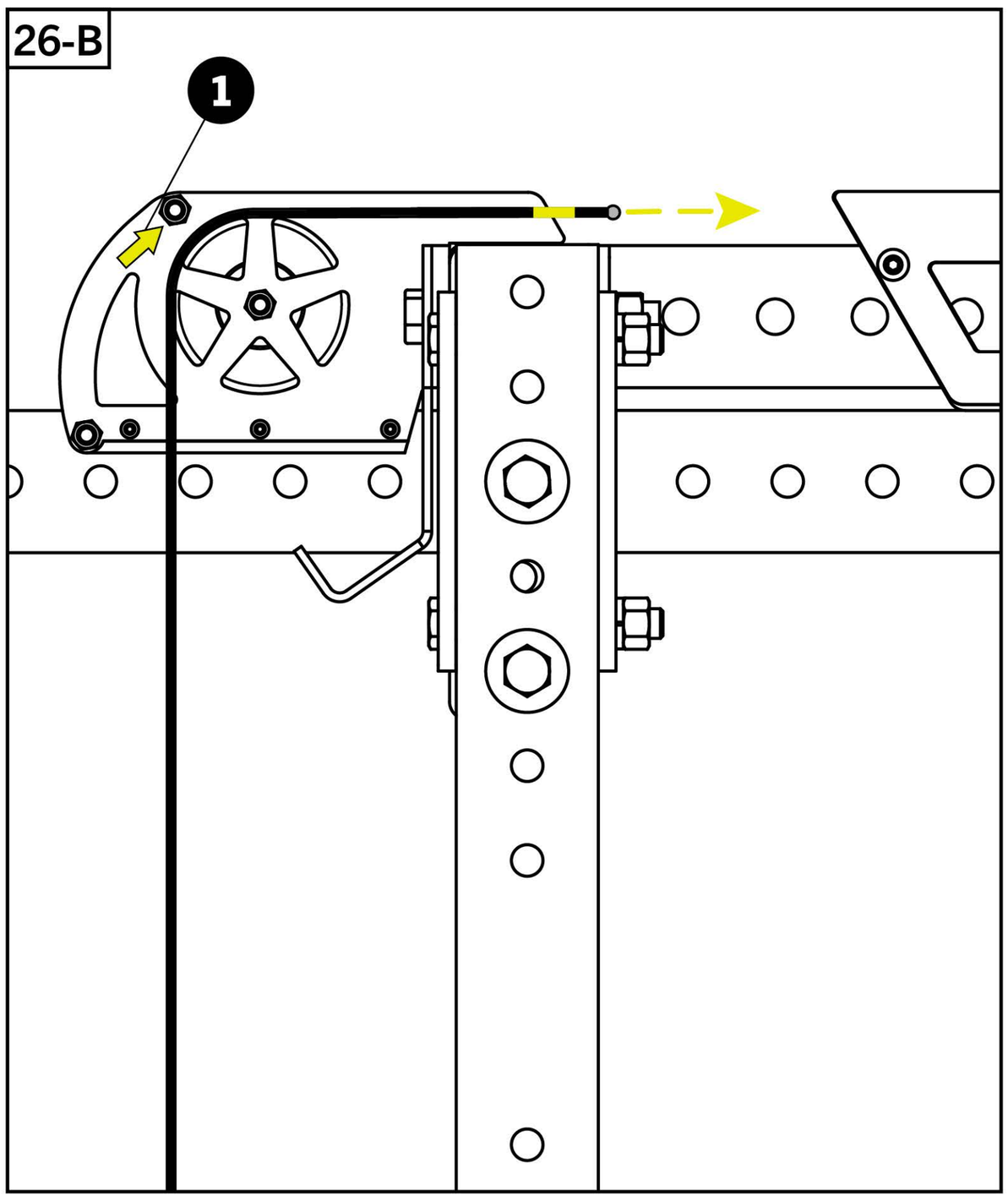

26-C

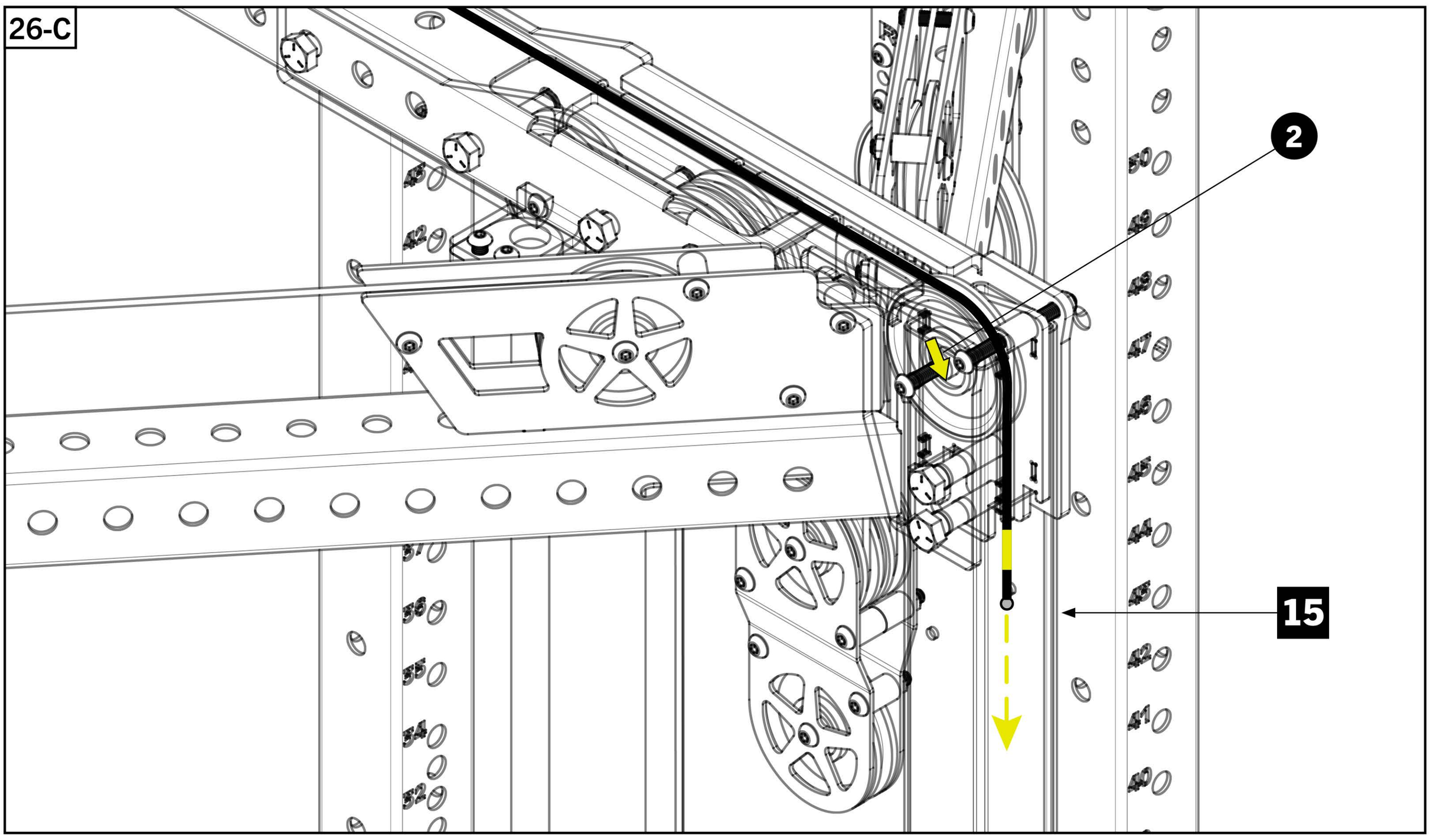

STEP 27

- Feeding cable around the rear pulley of the Low Rear Pulley Assembly [**27**] and up. This is easiest accomplished by pulling most of slack through rear window on Rear Upright and then re-inserting.
- Feed cable around the bottom pulley in the Rear Peanut Pulley Assembly [**48**] and then back down again.
- Feed around the front pulley in the Low Rear Pulley Assembly, continuing diagonally up underneath the Weight Stack through the cutouts on Low Row Crossmember [**16**] and towards the Low Row Assembly.

Note:

- Place finger through viewing windows to guide cable around pulleys as needed.

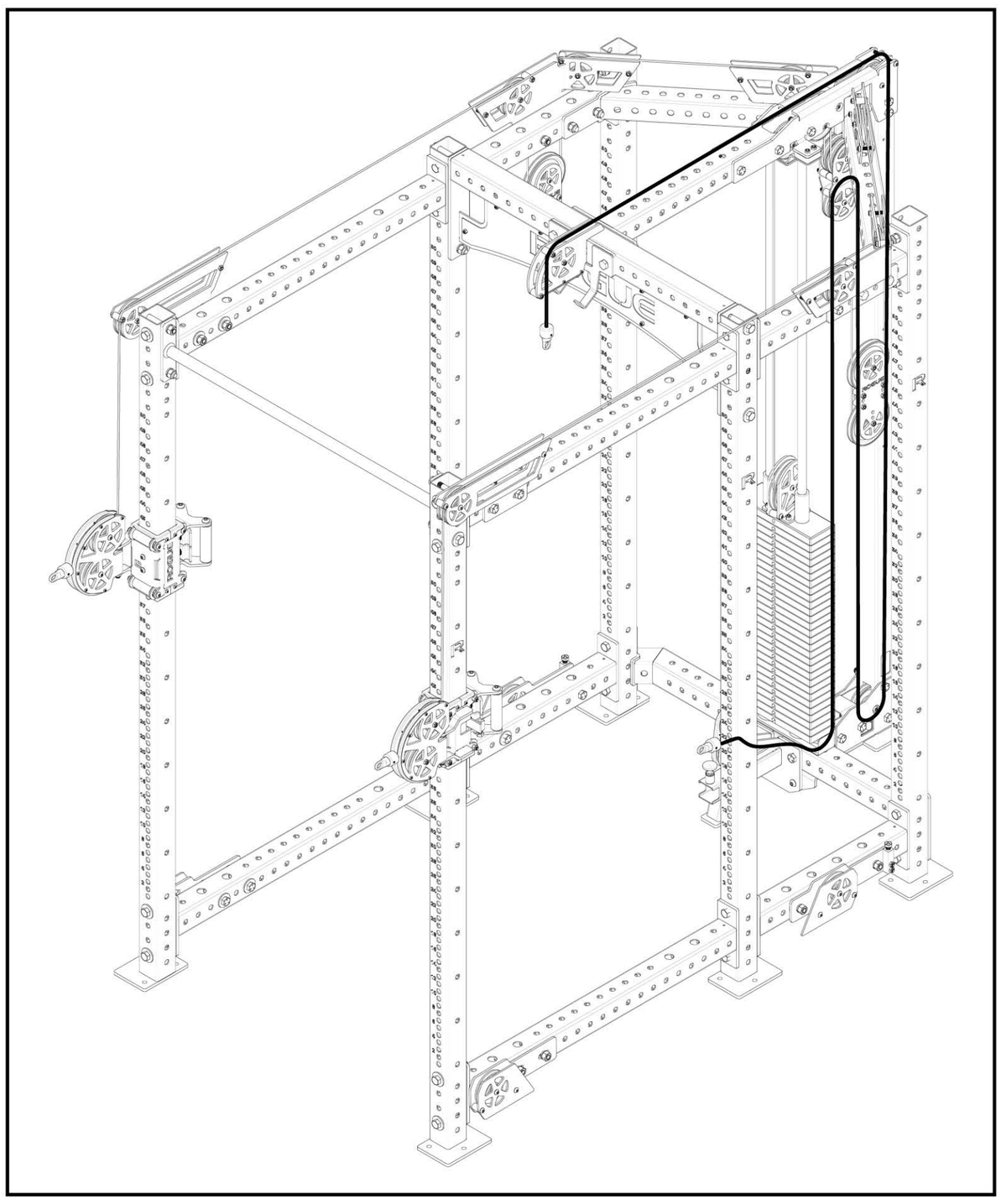

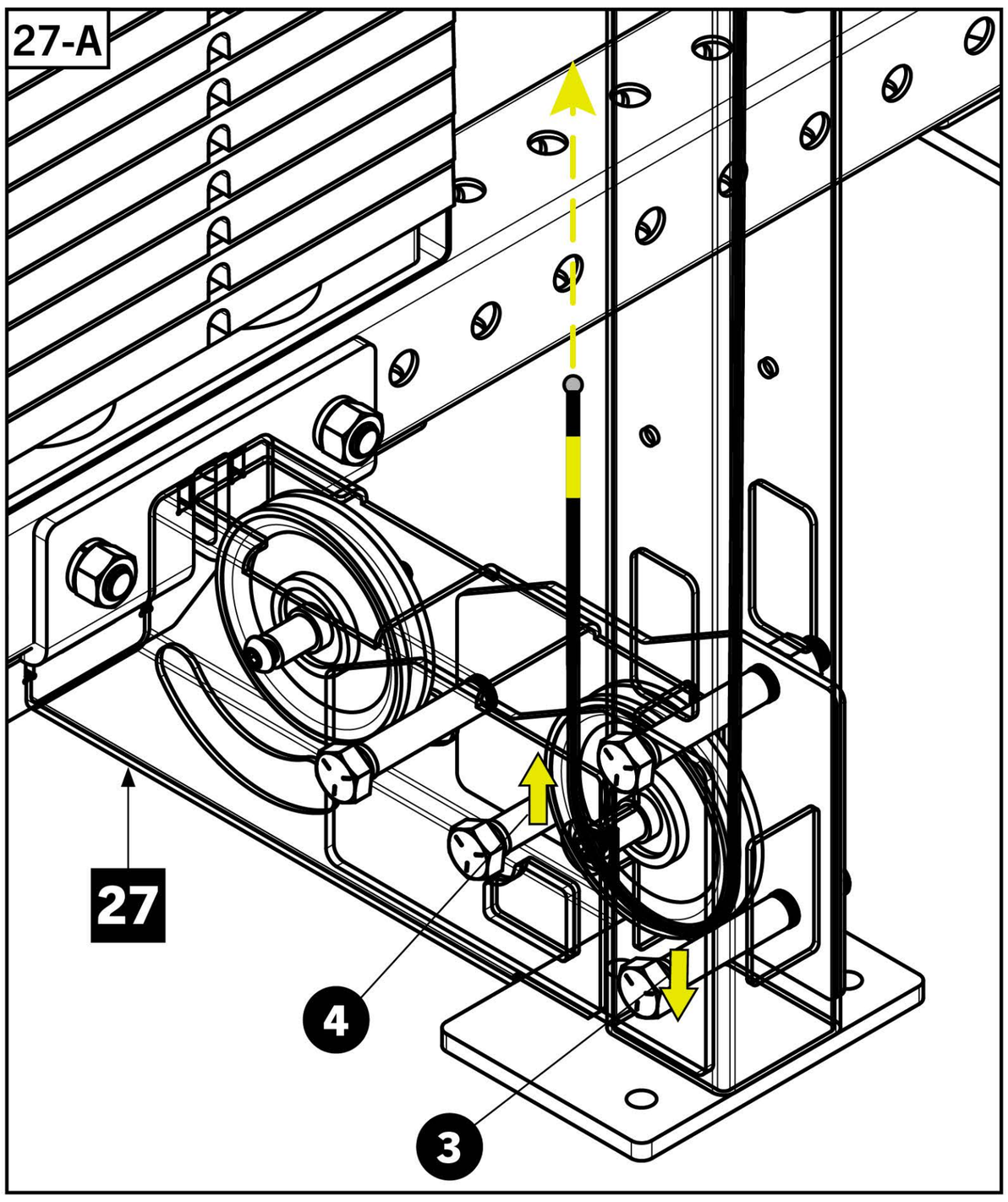

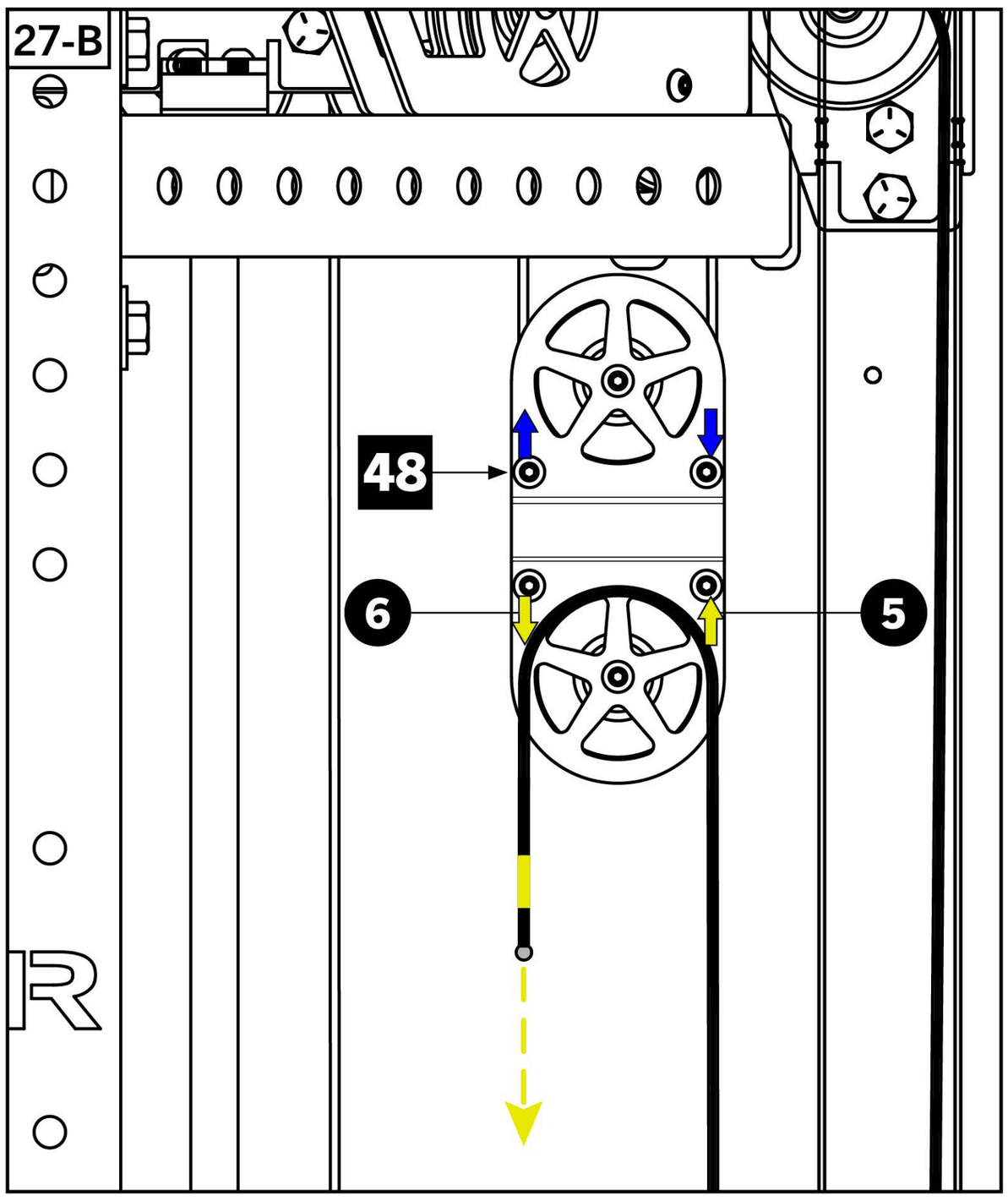

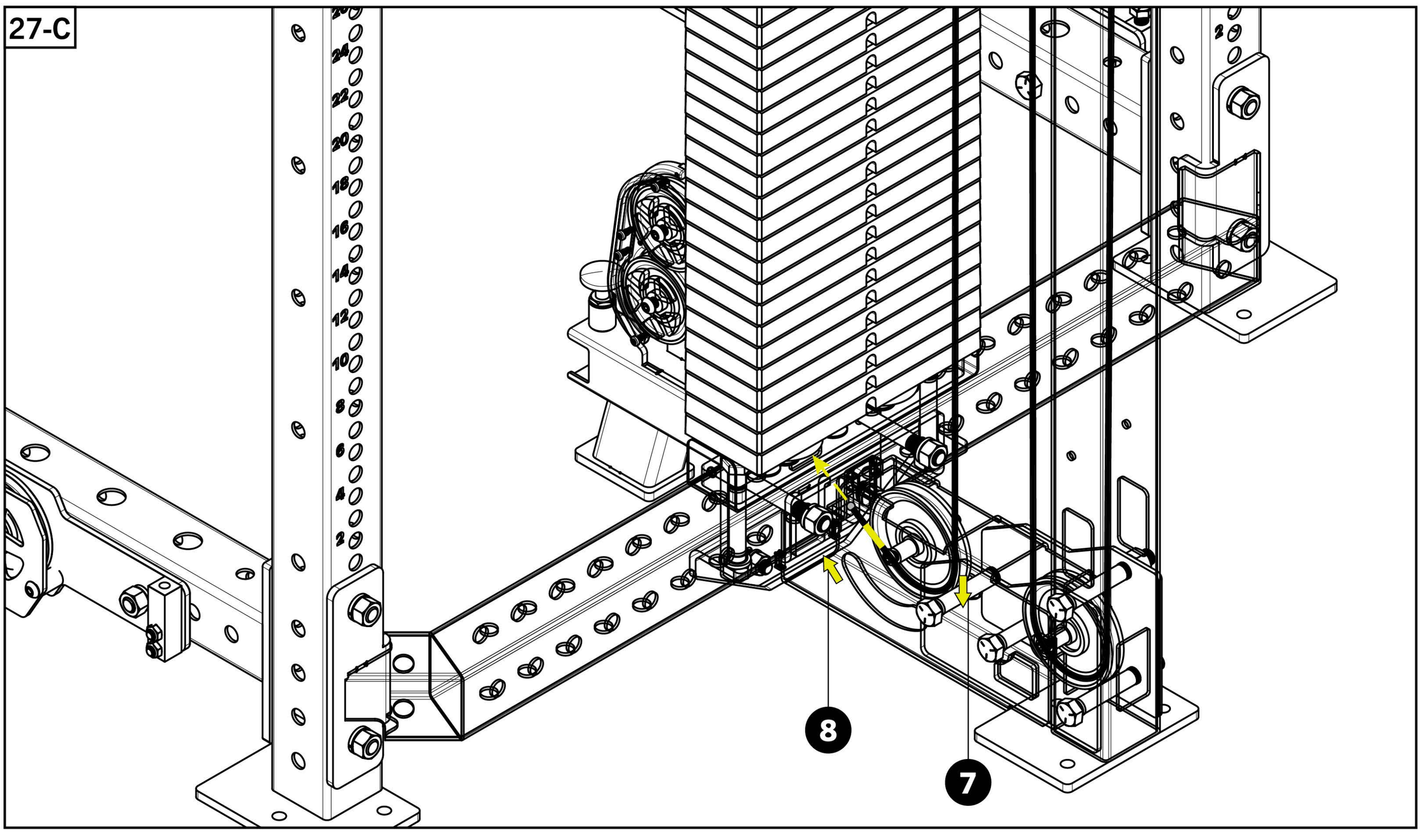

STEP 28

Tools Required:

- 3/32” Allen Key & 5/8” Wrench
- Feed cable out through the front of the Low Row Assembly [**26**], ensuring cable passes in between upper and lower pulleys.
- Remove yellow tag from Ball End of cable and pull cable out far enough to assemble Clevis.
- Assemble Clevis onto ball end of cable using the same procedure described on **STEP 25**.

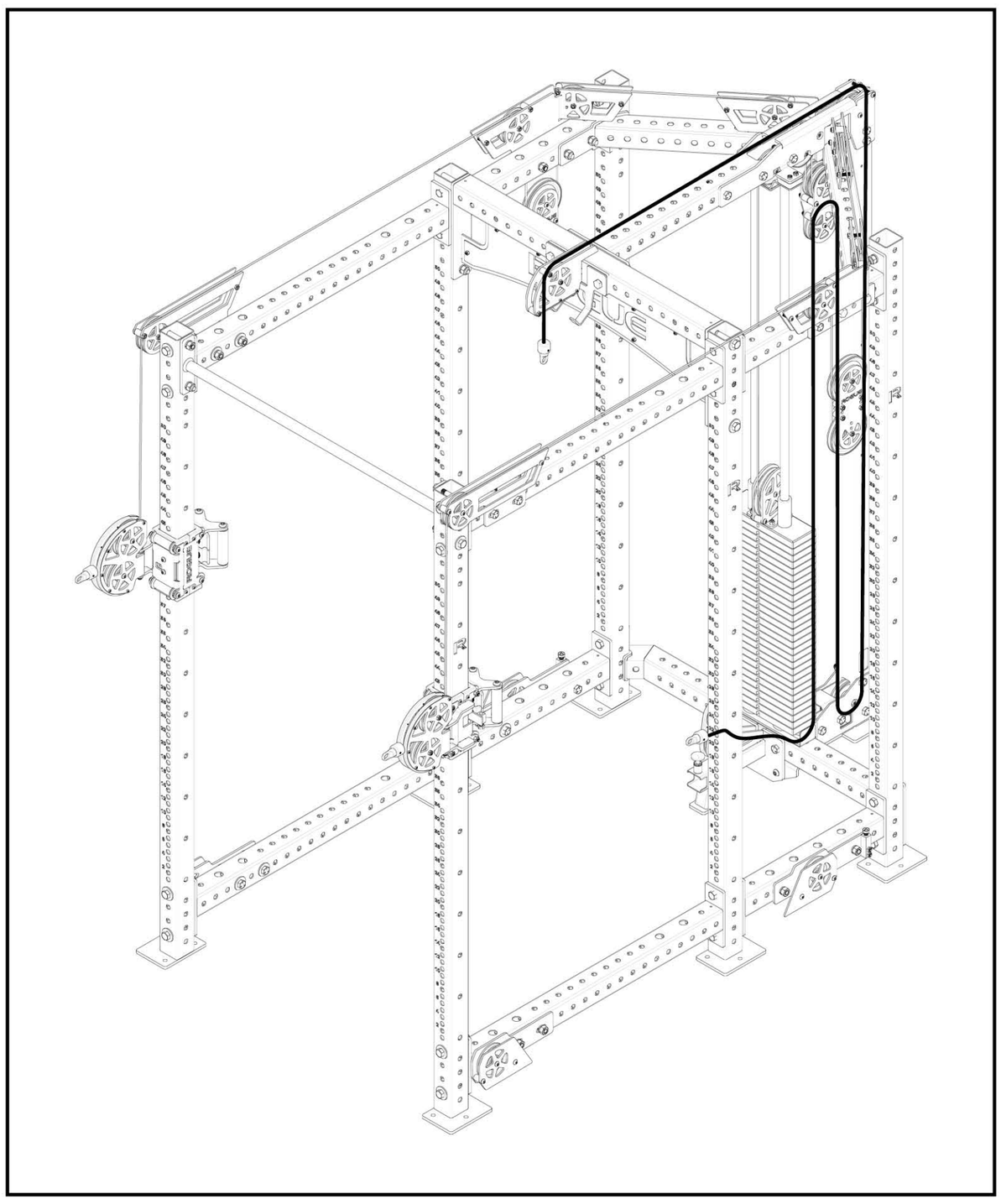

28-A

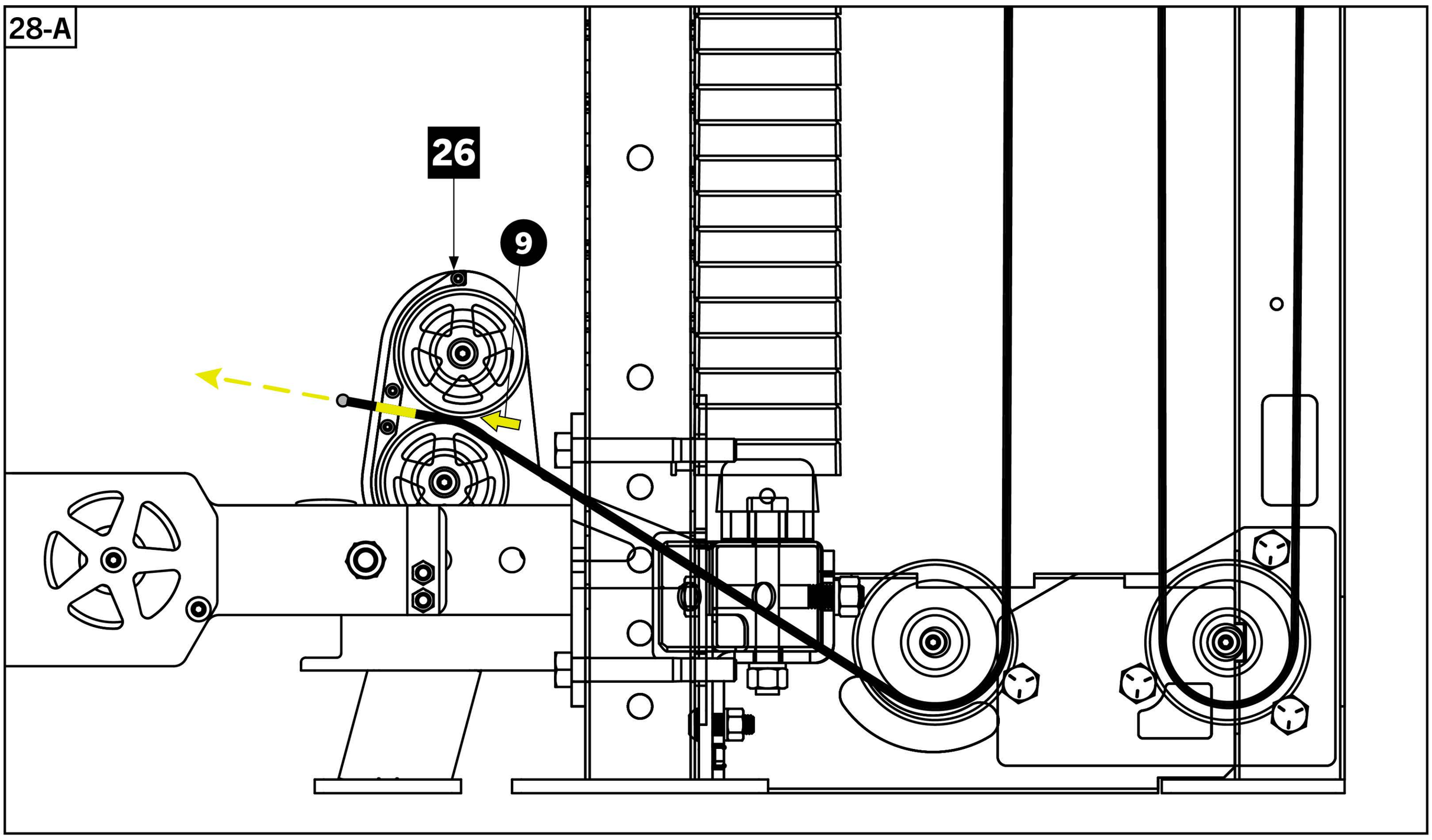

28-B

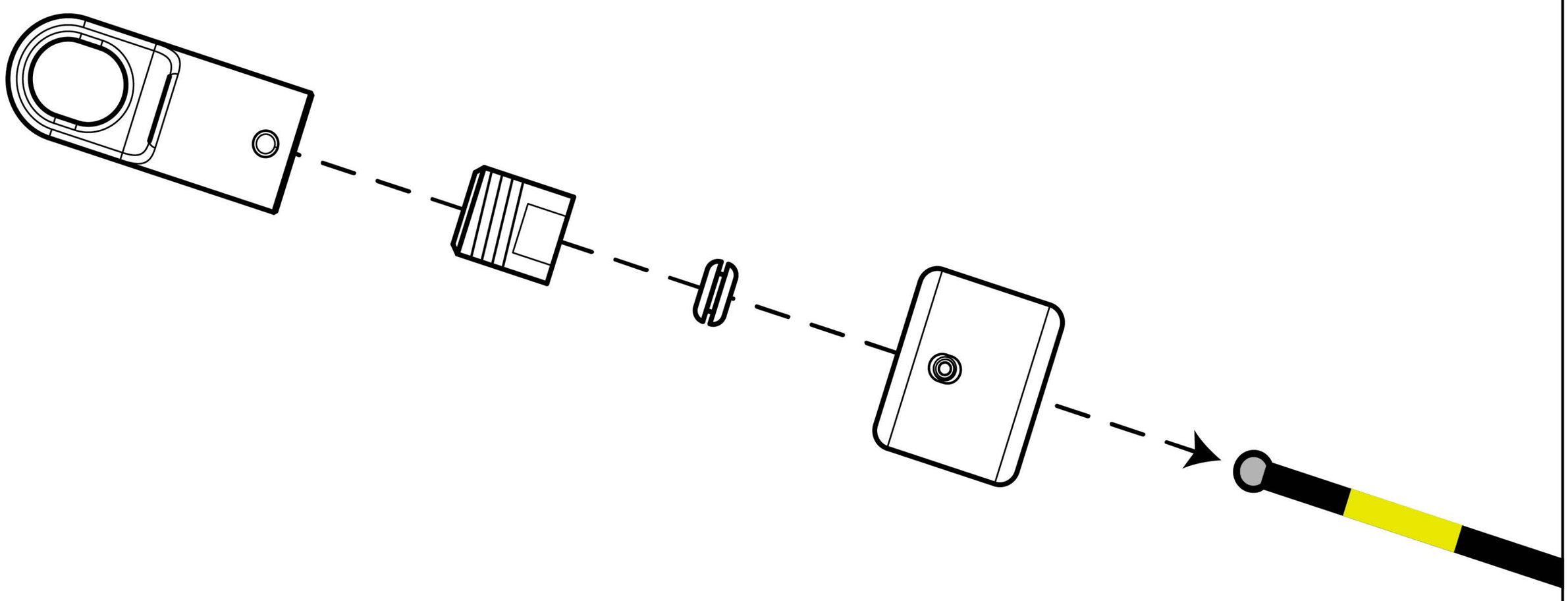

STEP 29

Tools Required:

- 7/32” Allen Key & 9/16” Wrench
- Remove Plastic Cable Retainers from **all four** Bottom Side Pulley Assemblies by removing 3/8” Button Head Screws.
- Remove only the lower Plastic Cable Retainers from both Side Peanut Pulleys [**49**].
- Hardware will be re-installed on **STEP 32**.

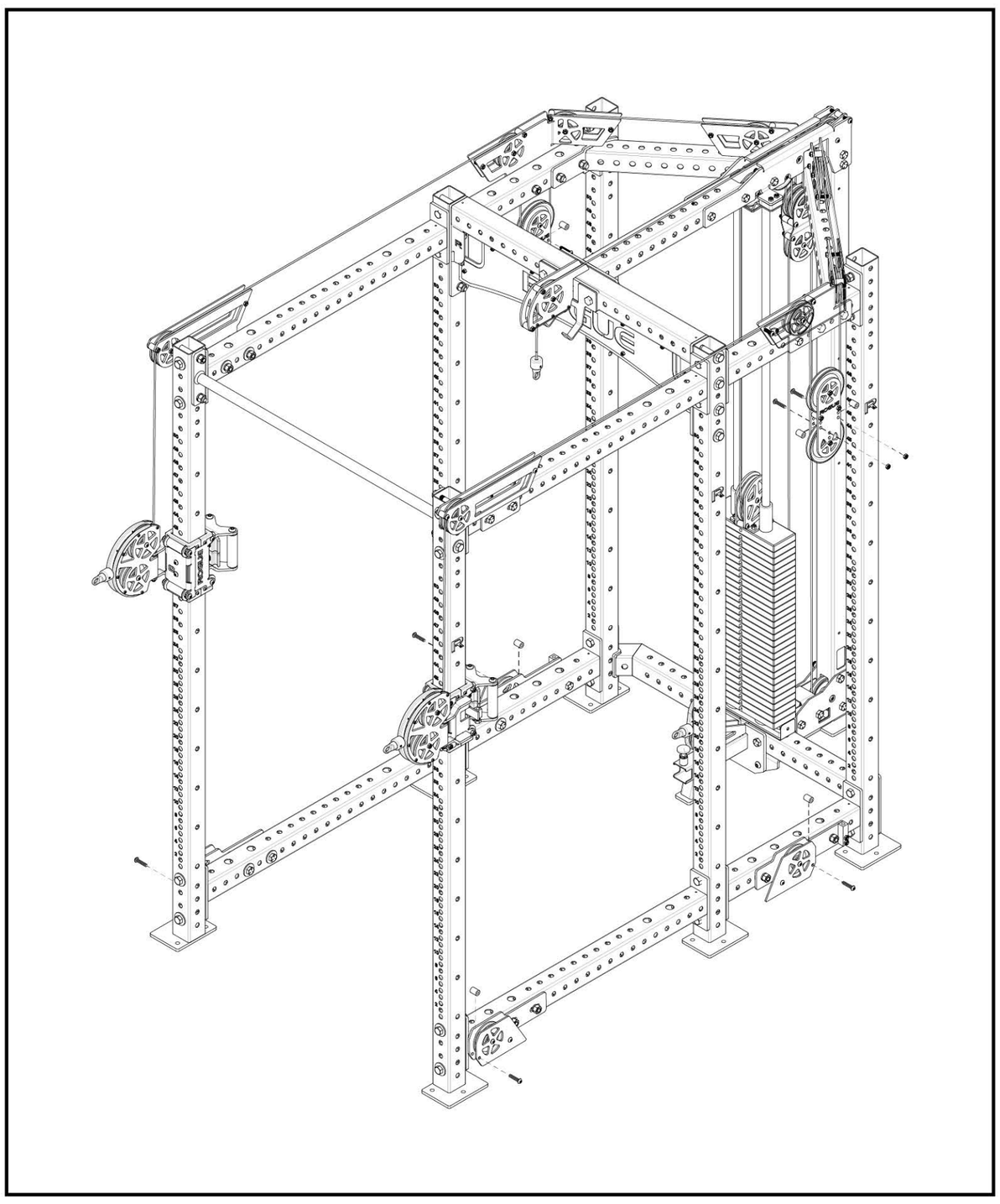

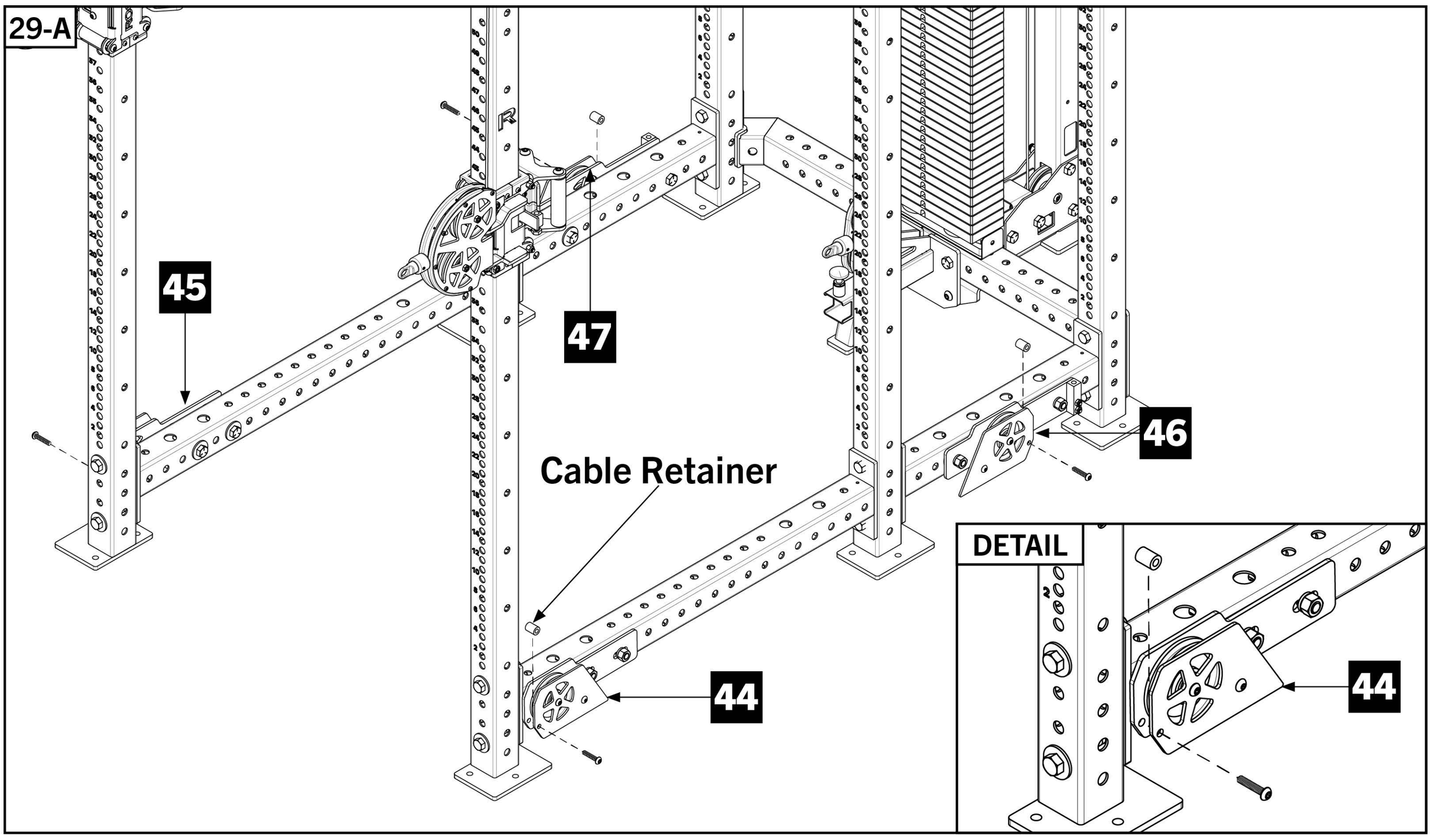

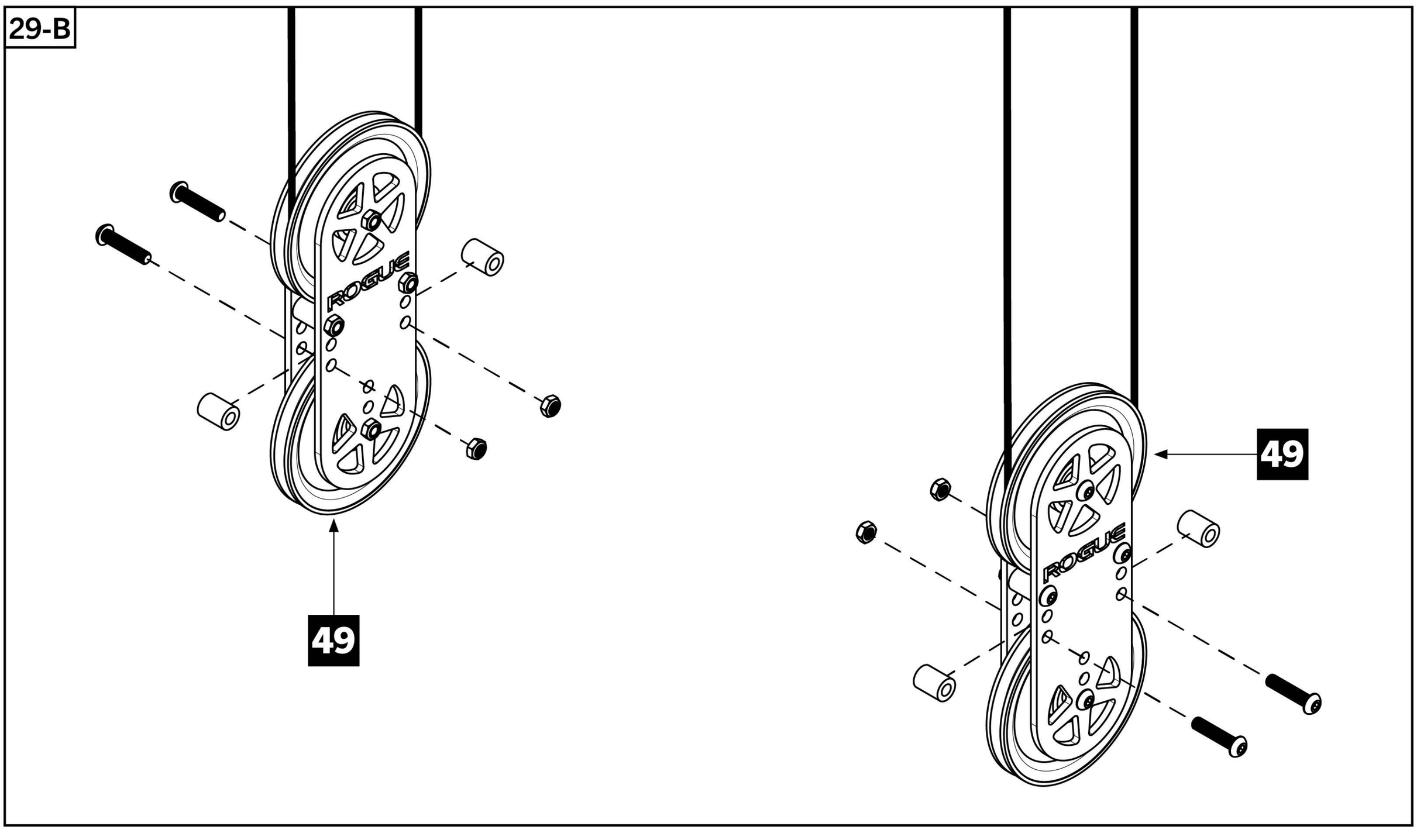

STEP 30

Tools Required:

- 3/4” Wrench
- Assemble one of the included Low Side Cables [**54**] (red tag) onto RH side of rack by inserting the tagless end into stop block on back of Swivel Trolley RH [**17**].
- Loosen the hex nut if needed to ensure approximately 1/2” of threads are showing between the bolt head and nut.
- Tighten the bottom bolt head until the nut is tight against the stop block.
- Feed the other end of cable with red tag down around the pulley on Bottom Front Pulley Assembly - RH [**44**] and continue towards back of rack.

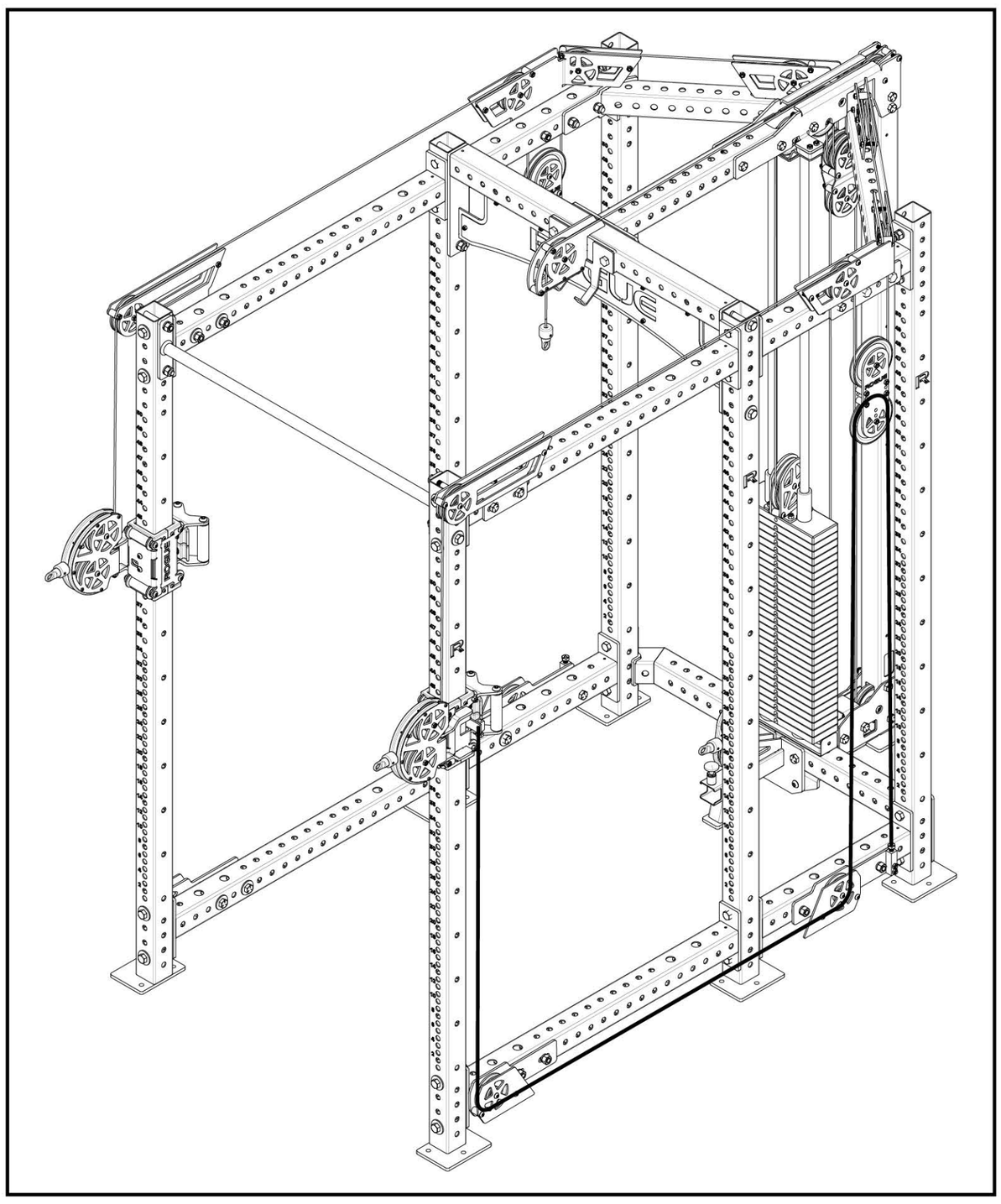

30-A

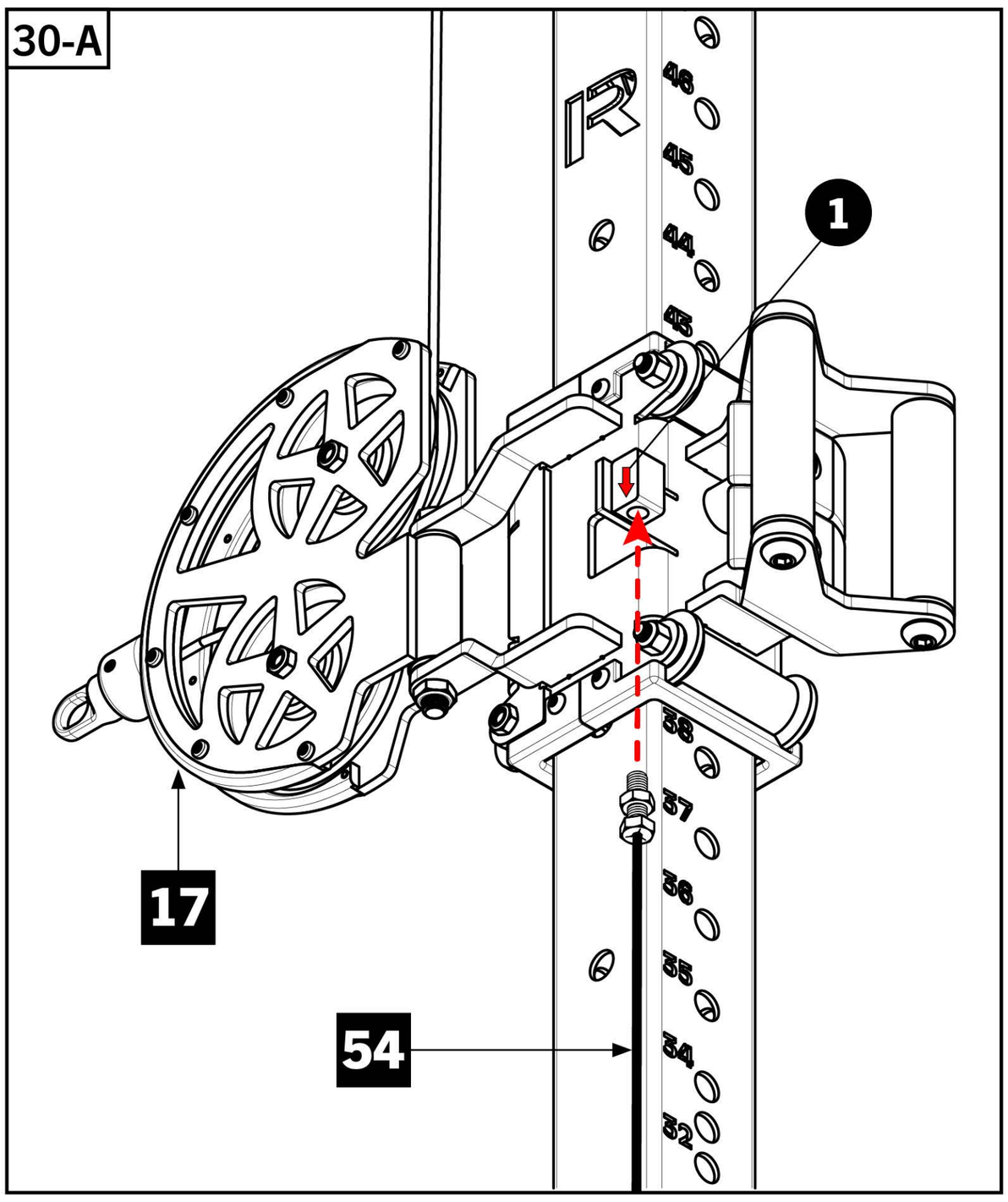

30-B

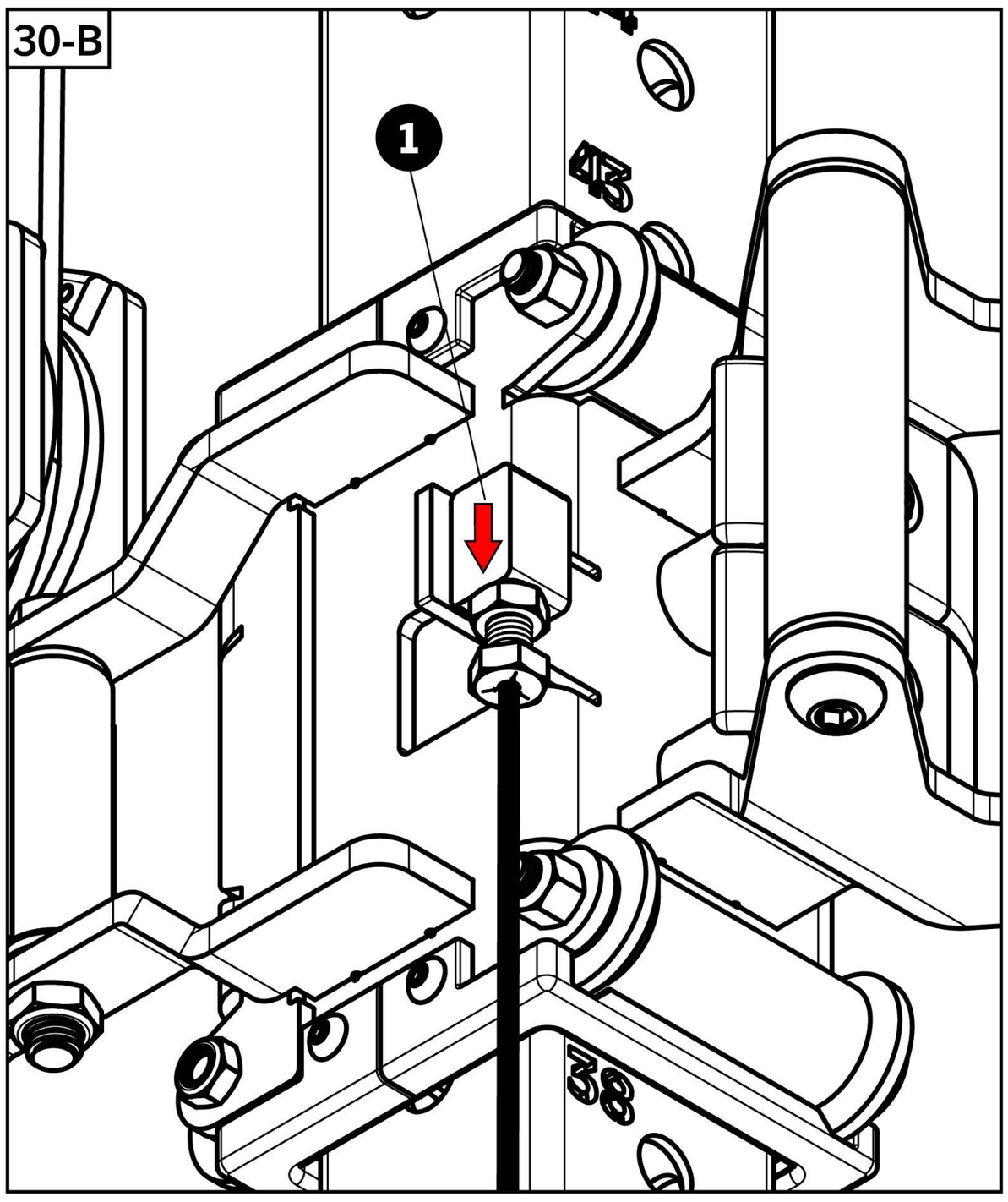

30-C

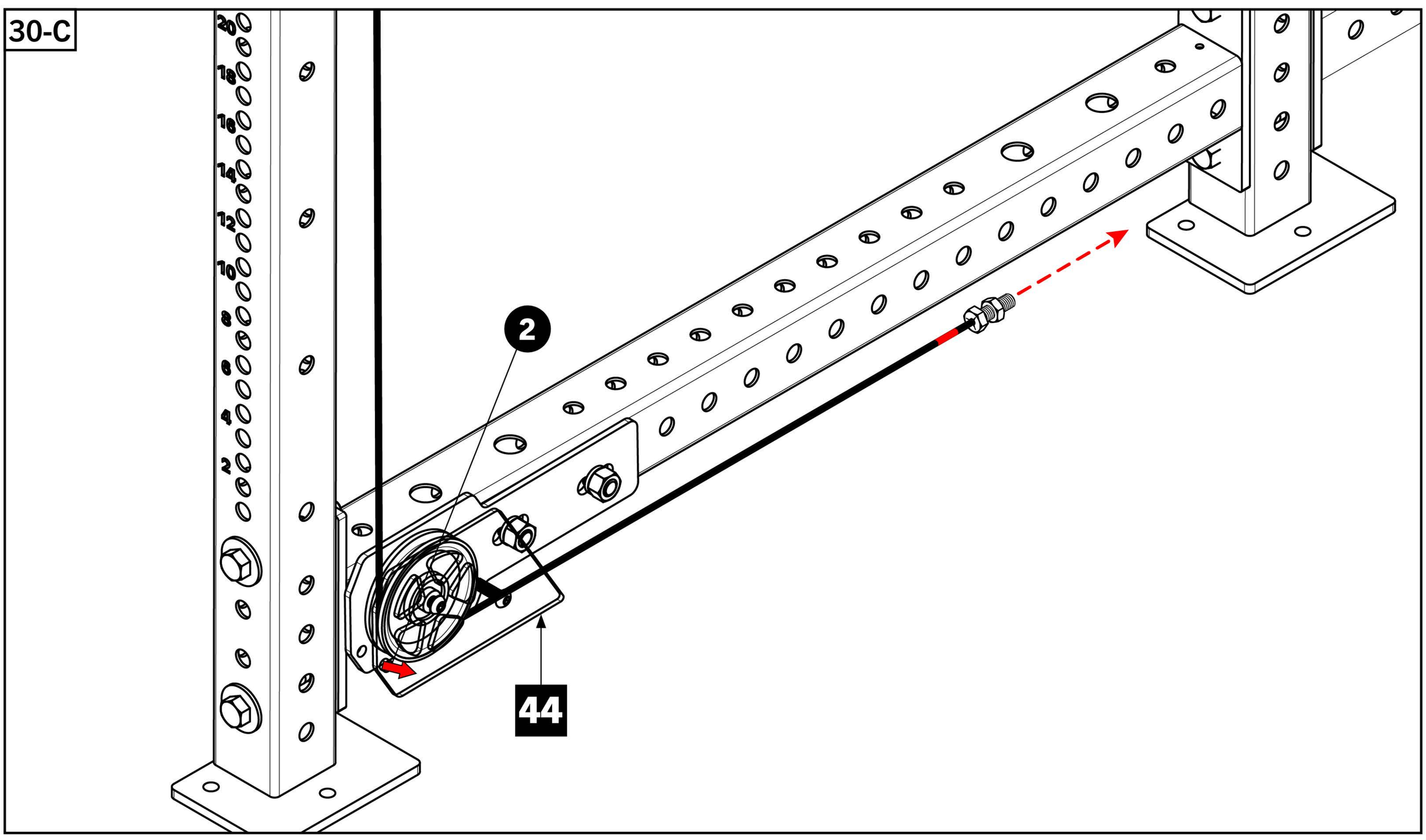

STEP 31

Tools Required:

- 3/4” Wrench
- Continue feeding around the pulley on Bottom Rear Pulley Assembly [**46**] and up around the lower Side Peanut Pulley [**49**], following the arrow indicator directions.
- Insert threaded end into stop block at the back of Bottom Rear Side Pulley Assembly - RH [**46**] and screw tight, ensuring 1/2” of threads showing between 3/4” bolt head and hex nut.

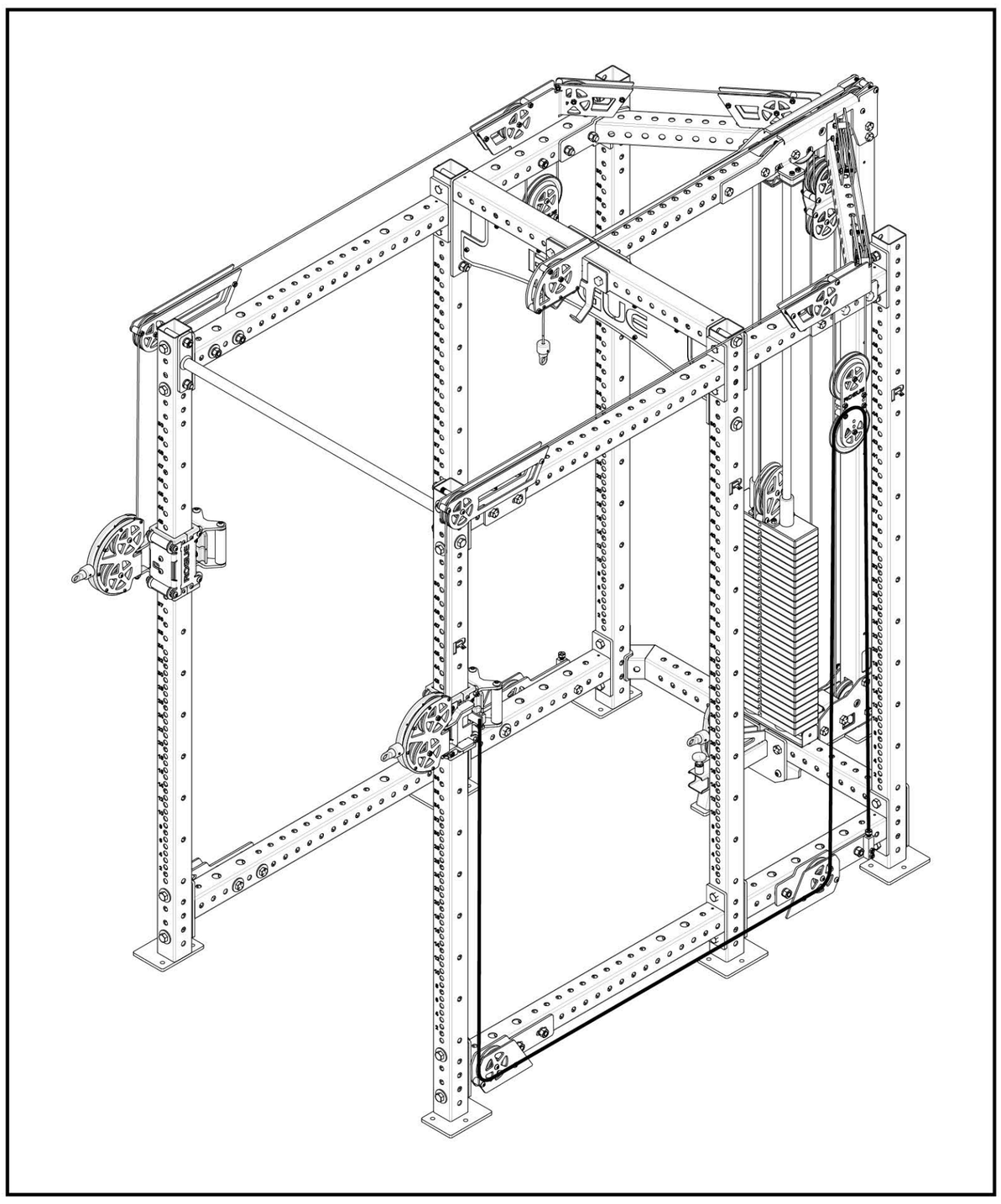

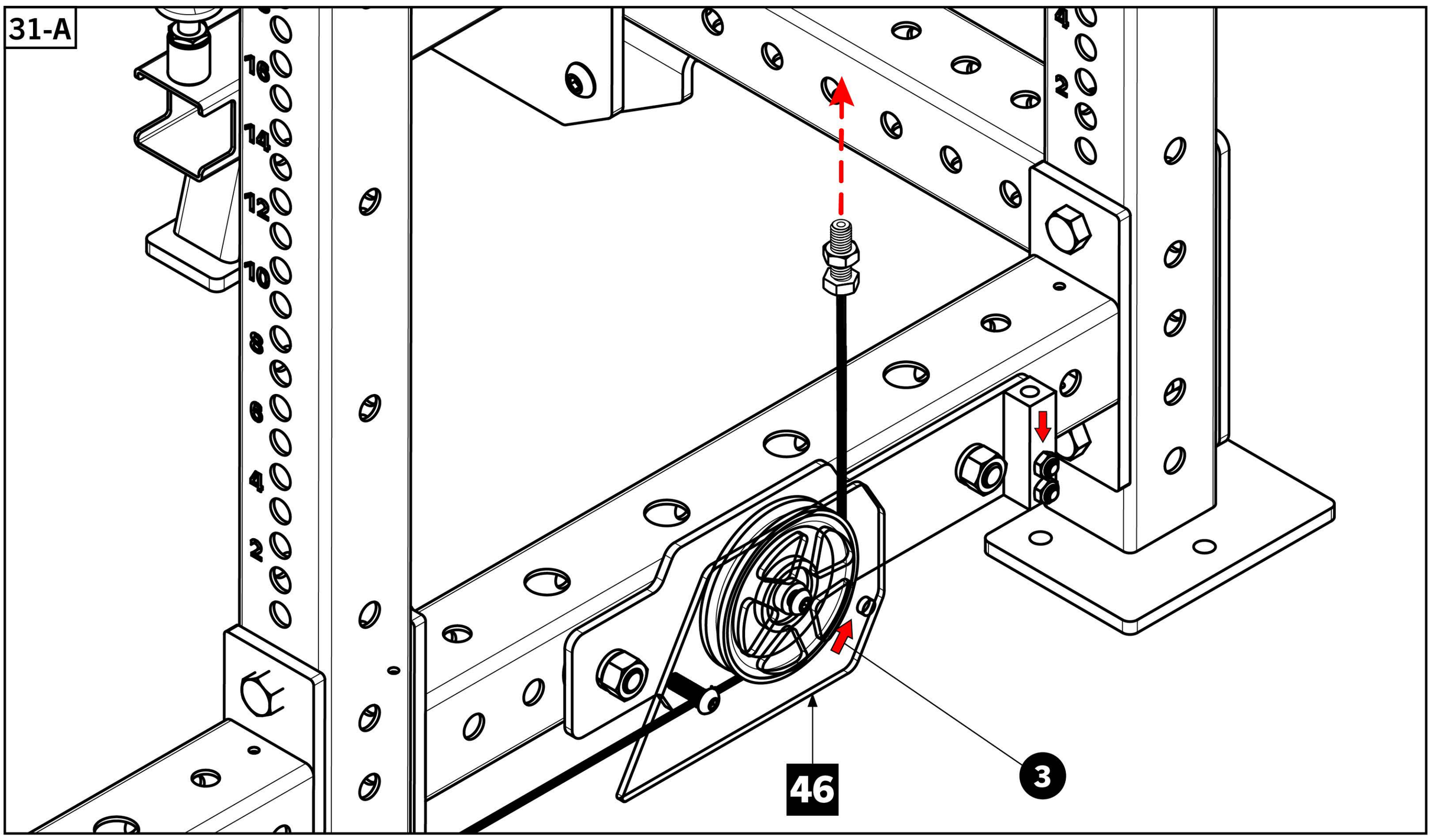

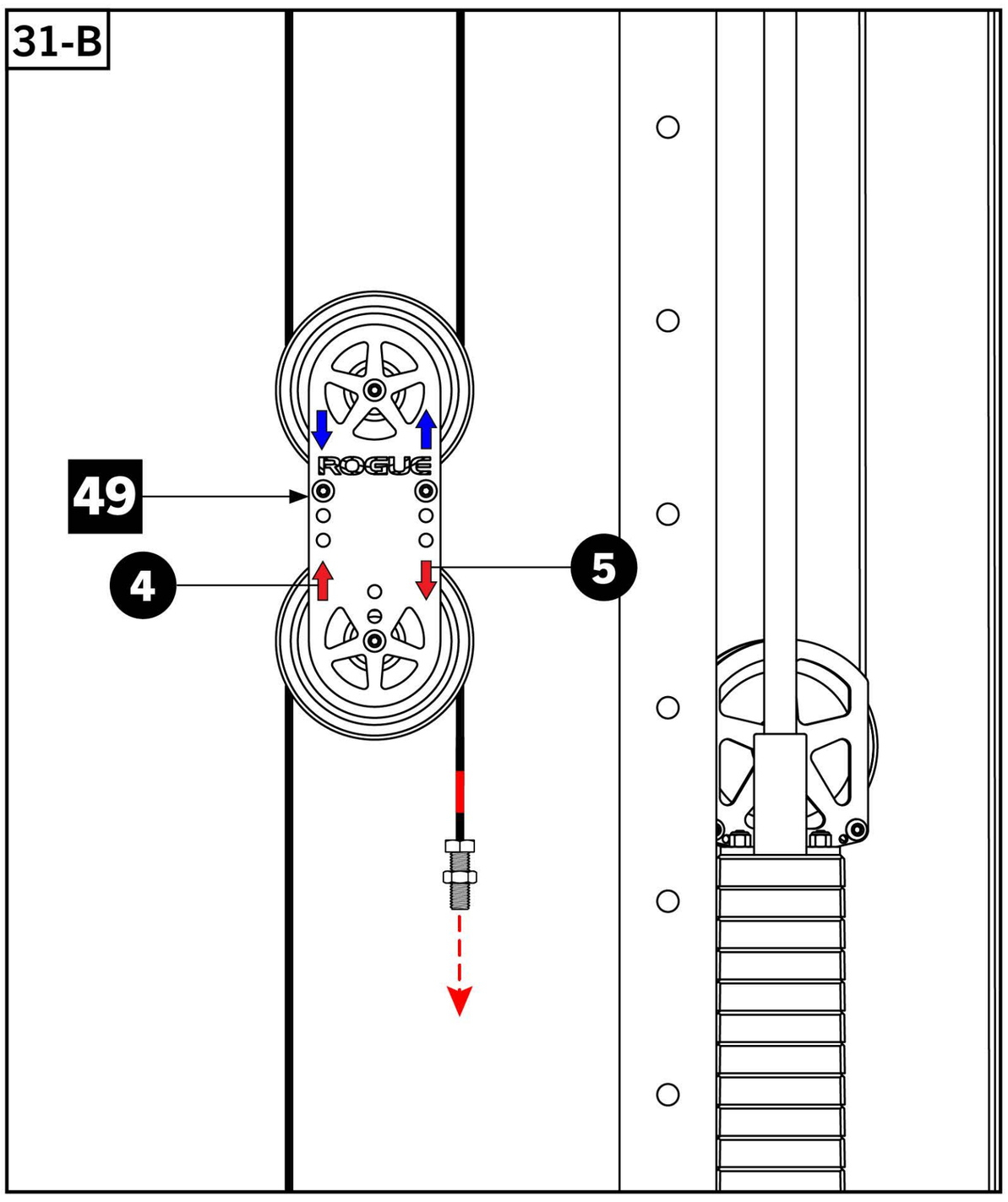

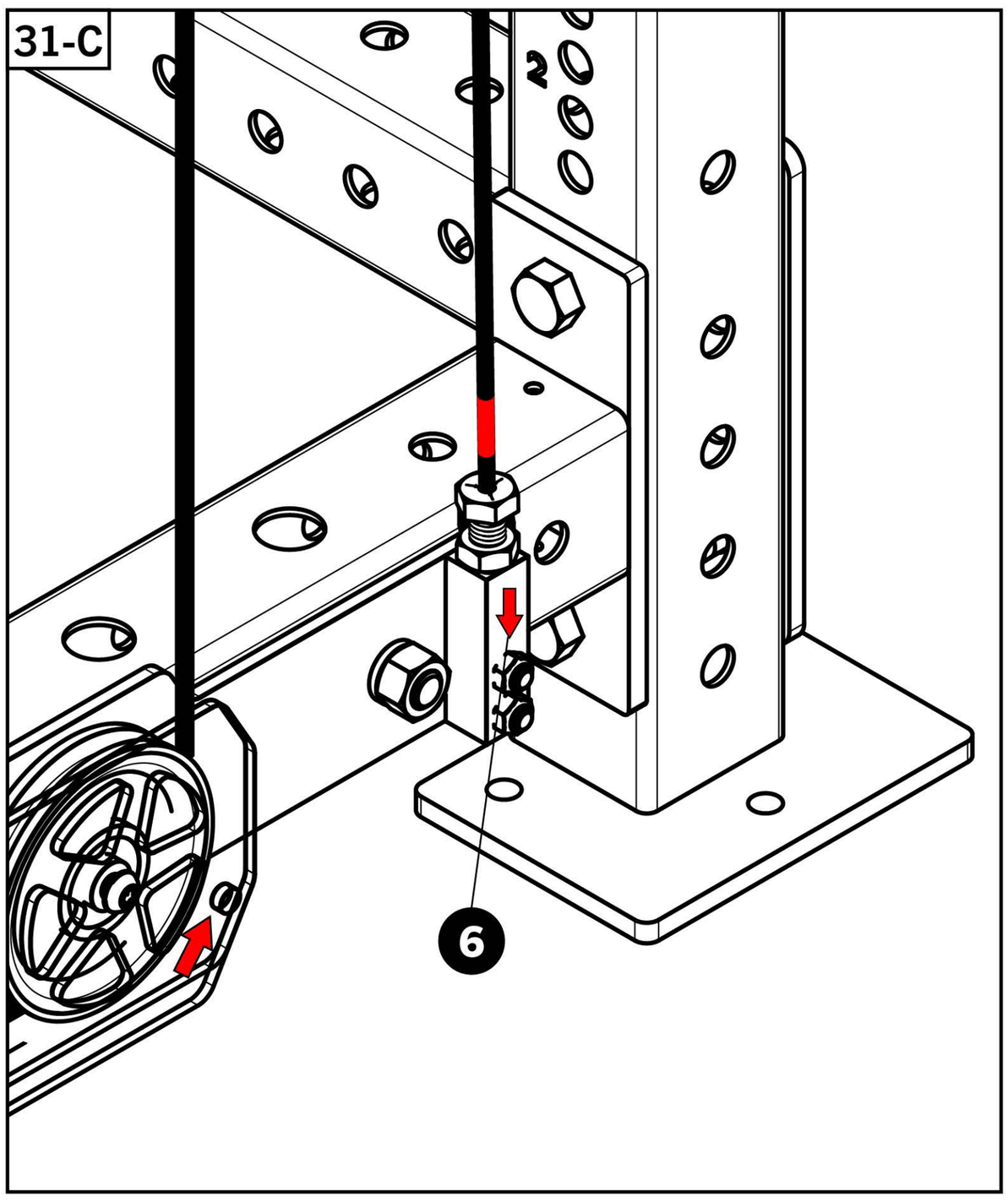

STEP 32

Tools Required:

- 3/4” Wrench
- **32-A**: Follow **STEP 30** & **31** again to assemble the remaining Low Side Cable (red tag) on the **Left Hand side of rack**.
- Start at stop block on the Swivel Trolley LH [**18**] and end at stop block on the Bottom Rear Side Pulley - LH [**47**].

Tools Required:

- 7/32” Allen Key & 9/16” Wrench
- **32-B**: Re-install Plastic Cable Retainers on **all four** Bottom Side Pulley Assemblies and both Side Peanut Pulleys. Fully Tighten.

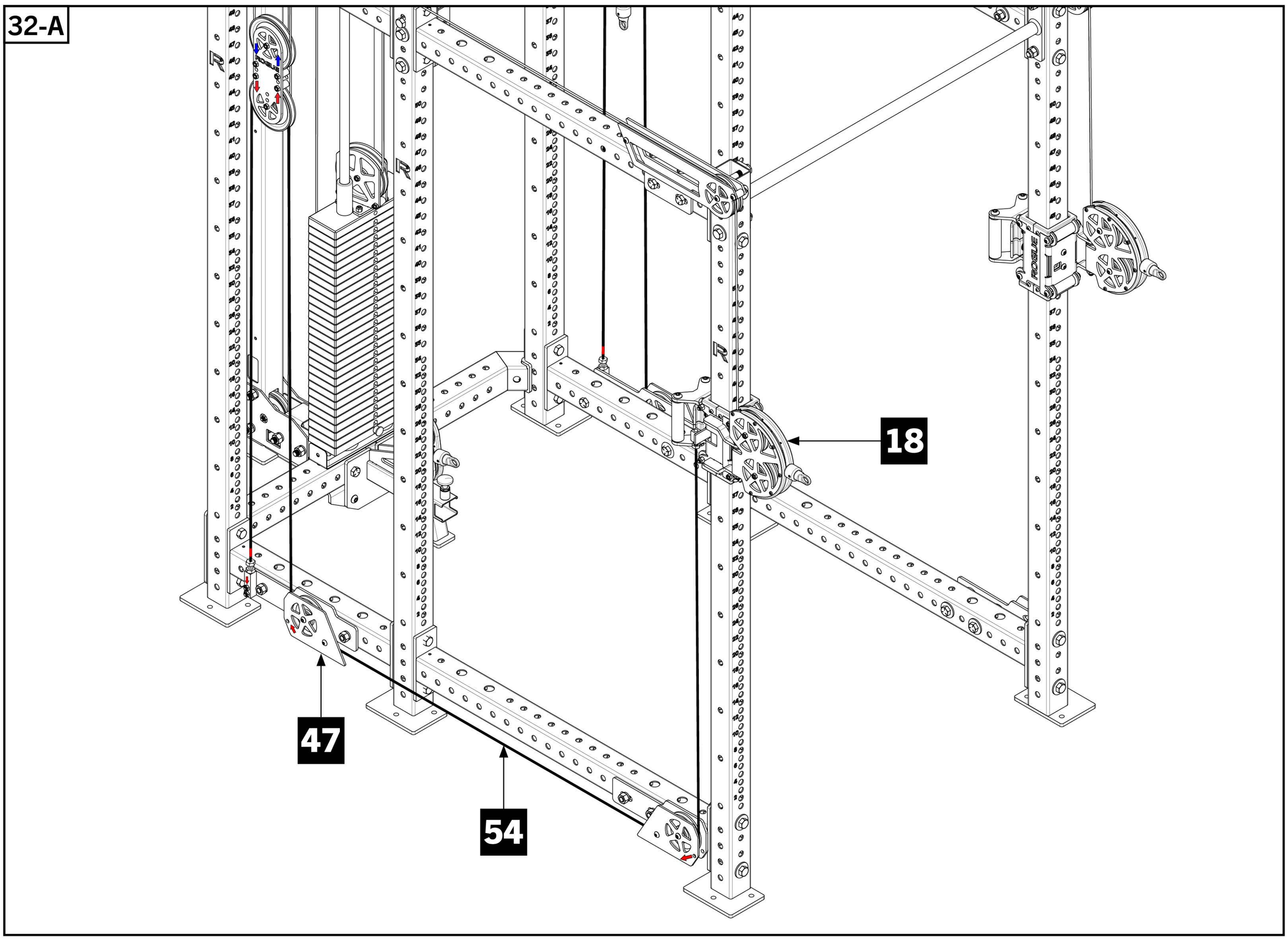

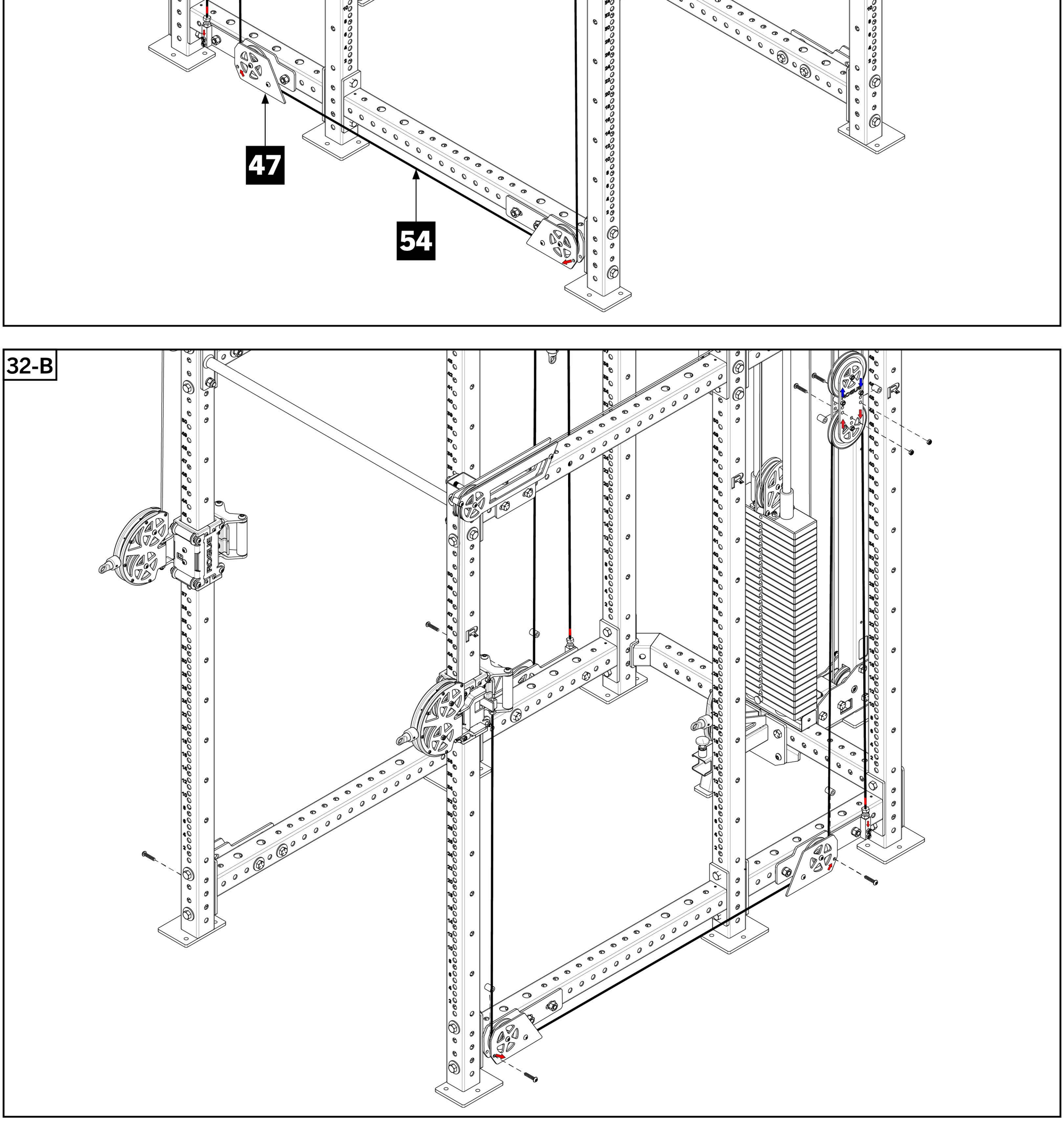

STEP 33

Tools Required:

- 7/32” Allen Key
- Remove twelve 3/8” Button Head Screws located on the rear of the Front Side Pulley Assemblies and the front of the Rear Side Pulley Assemblies.
- Fasten the Top Cable Cover Rails [**37**] and Short Cable Cover Rails [**39**] between the Front and Rear Top Side Pulley Assemblies by aligning holes and reinstalling the 3/8” Button Head Screws.
- Repeat this process on the bottom of your rack to install Low Cable Cover Rails [**38**].
- [!] Note the orientation of the Rogue logos in relation to the rack. Ensure the cable opening is facing upward on the Top Cable Covers and downward on the Low Covers.

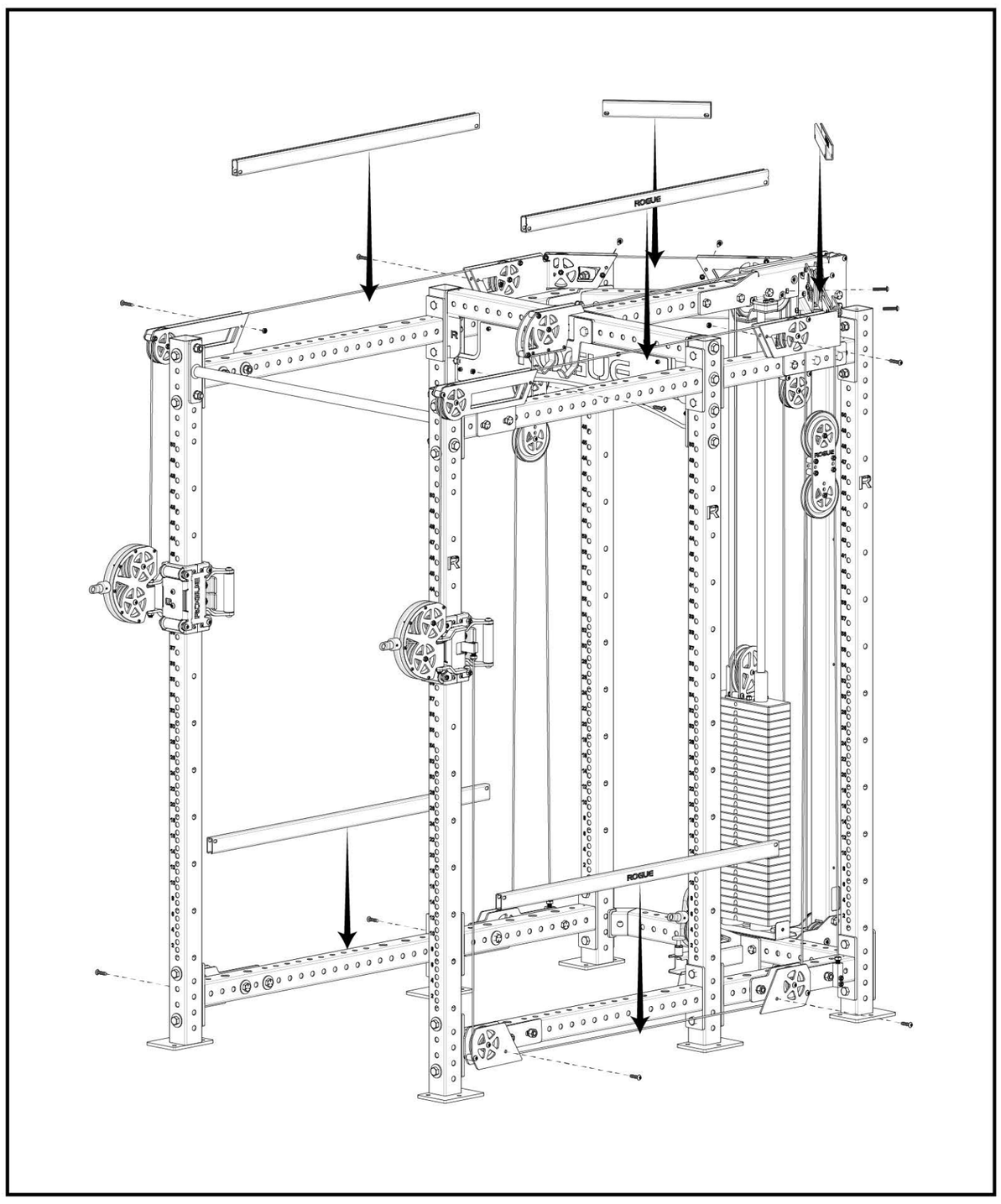

33-A

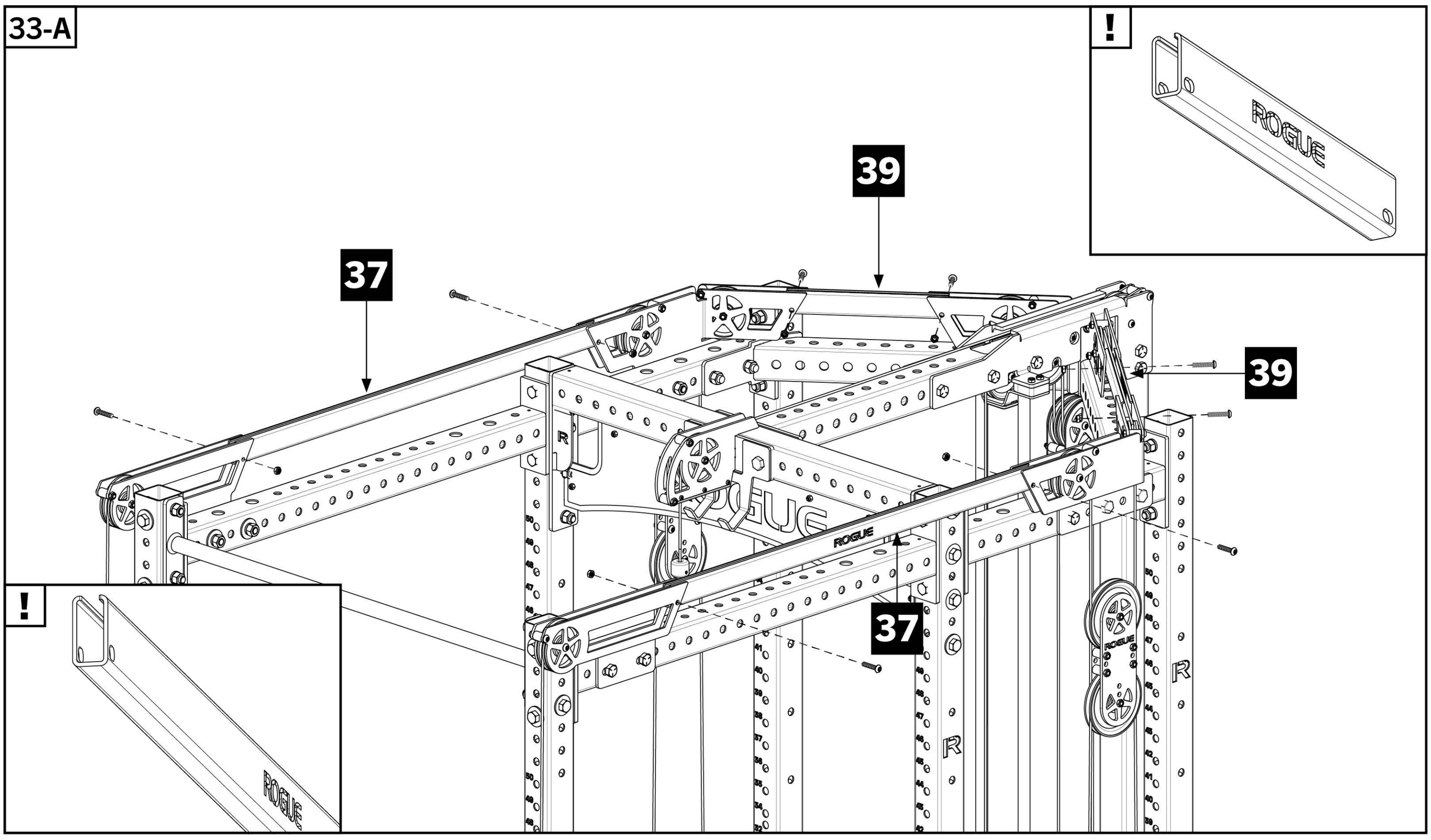

33-B

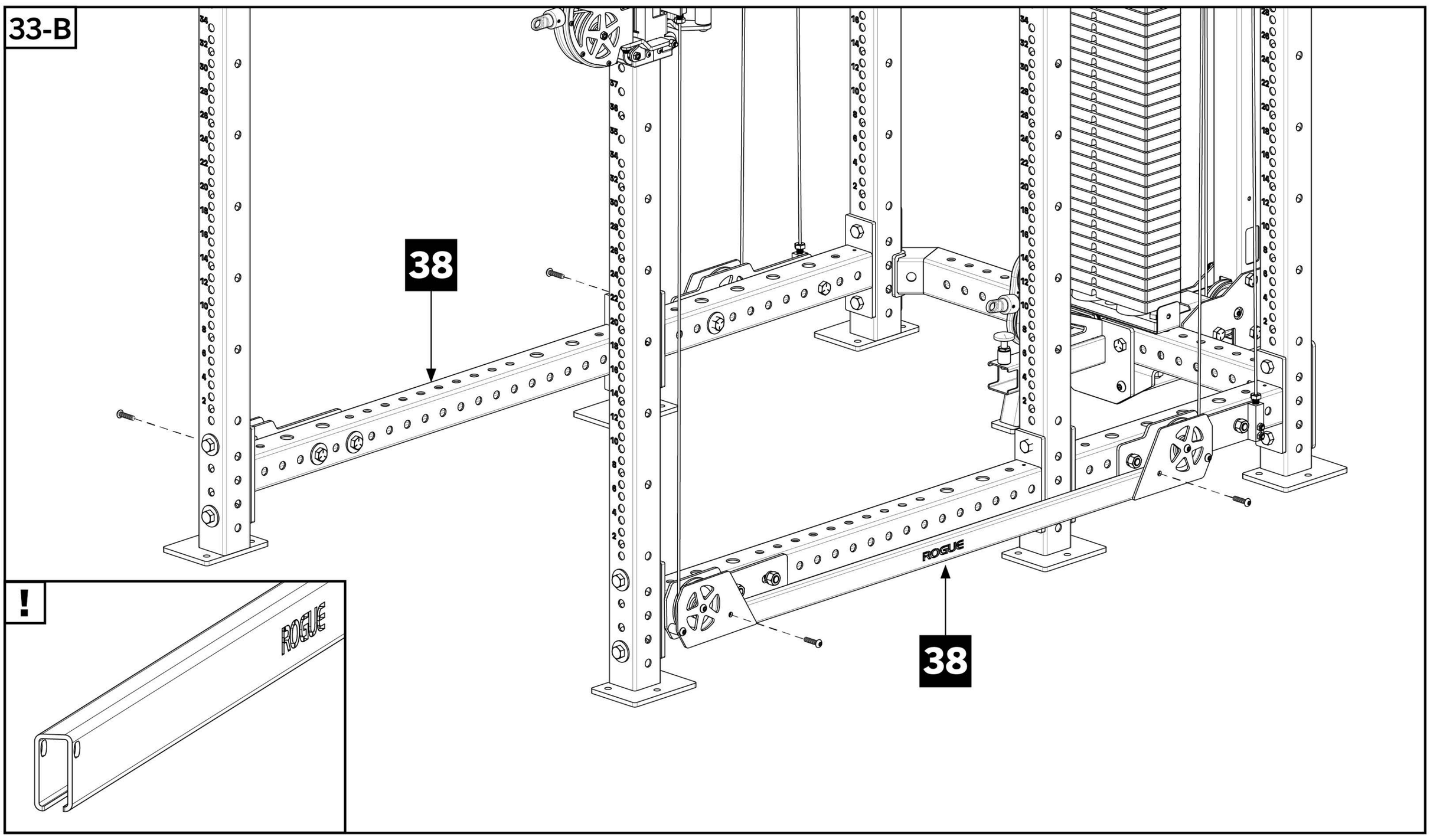

STEP 34

Tools Required:

- 15/16” Wrench, 1/8” Allen Key
- If modifying existing rack with add-on kit, skip to **34-B**.
- Assemble Plate Storage Pins [**6**] on rear Monster Lite Uprights at desired hole heights using 5/8” x 4-1/2” Hex Bolts [**11**], 5/8” Flat Washers [**12**], 5/8” Lock Washers [**13**], and 5/8” Hex Nuts [**14**].
- Slide Plate Storage Spacers [**56**] all the way down Plate Storage Pins with the set screws oriented on the bottom of Spacers as shown in **34-C**.
- Fully tighten set screws using 1/8” Allen Key.

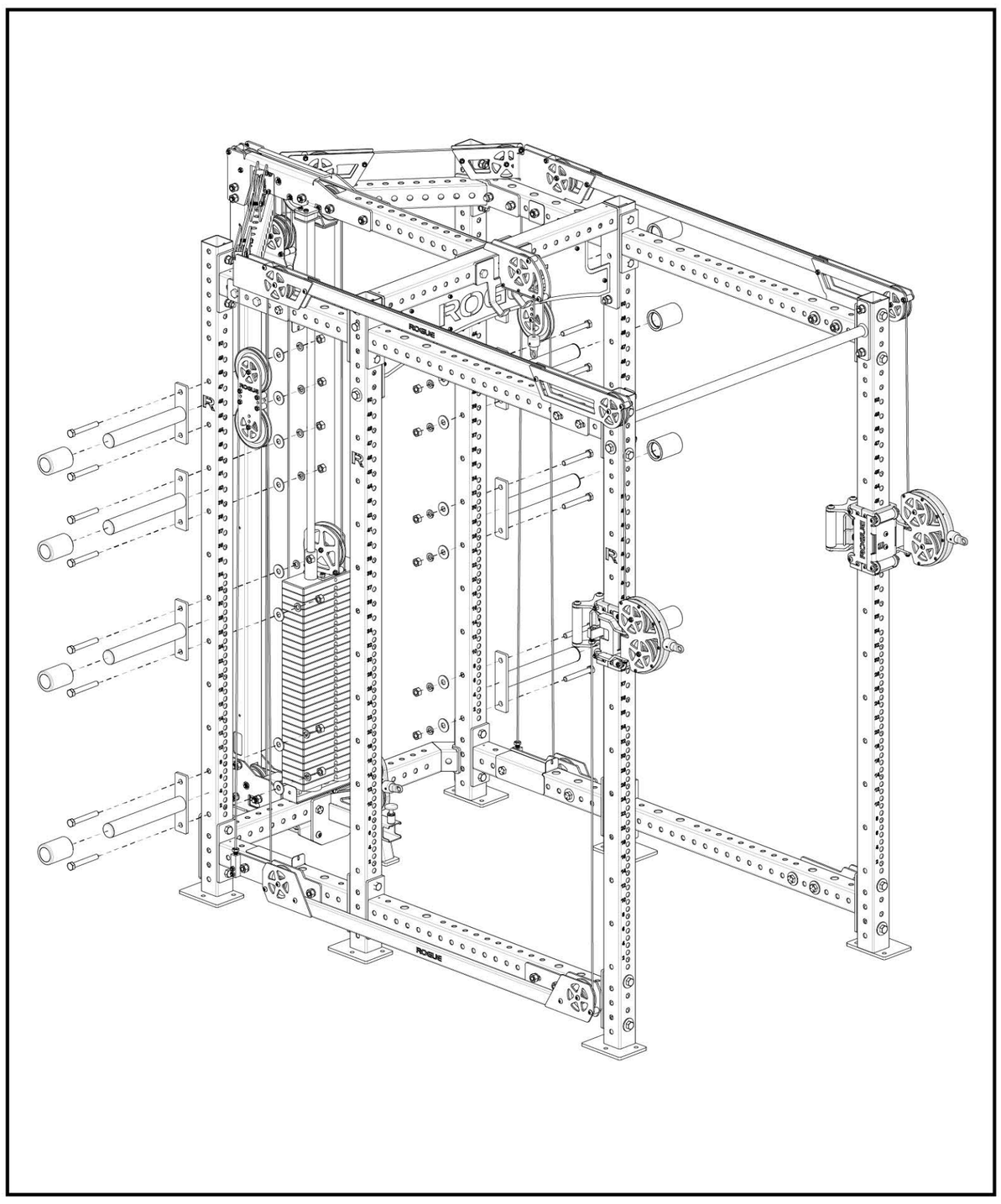

34-A

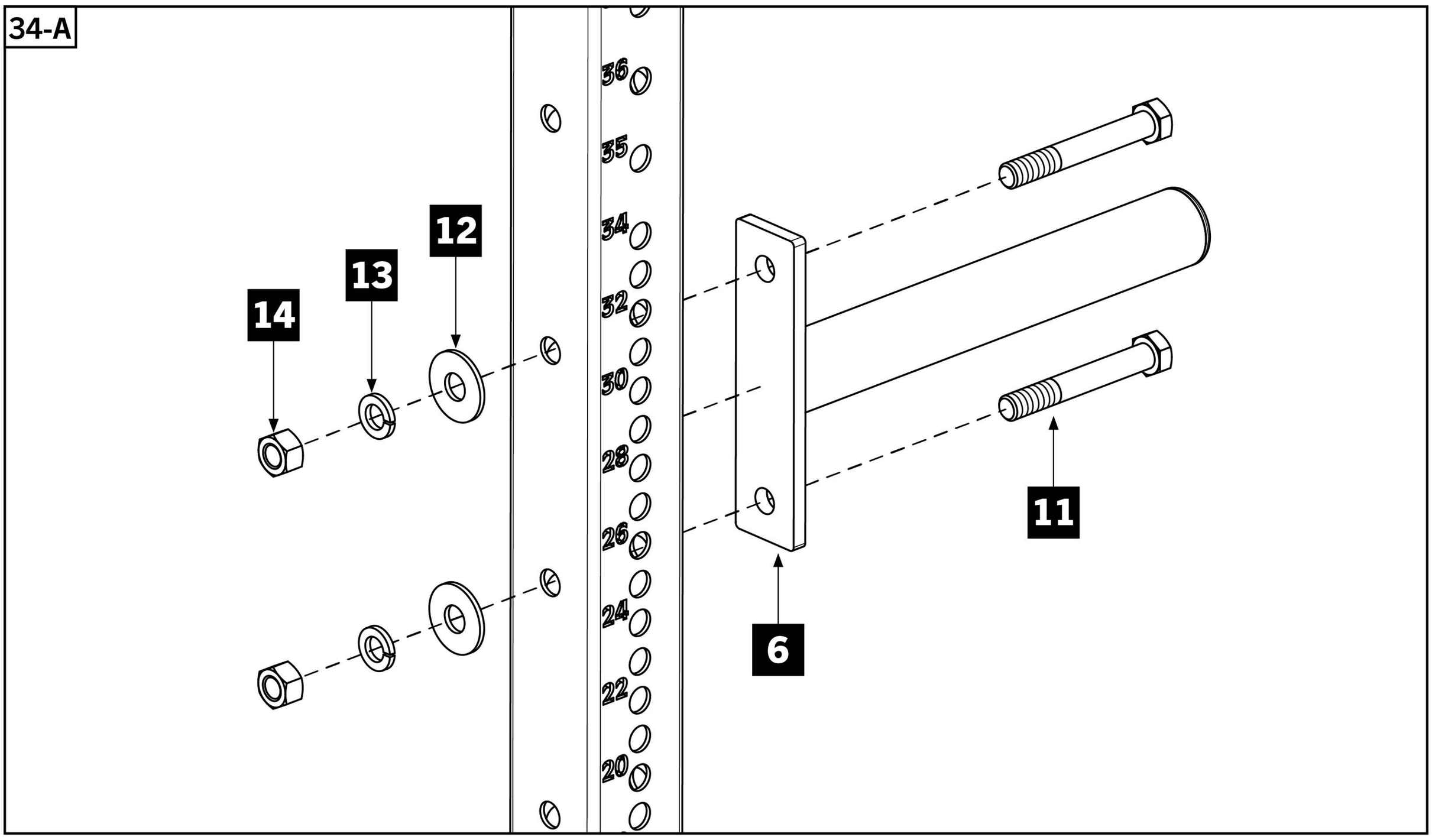

34-B

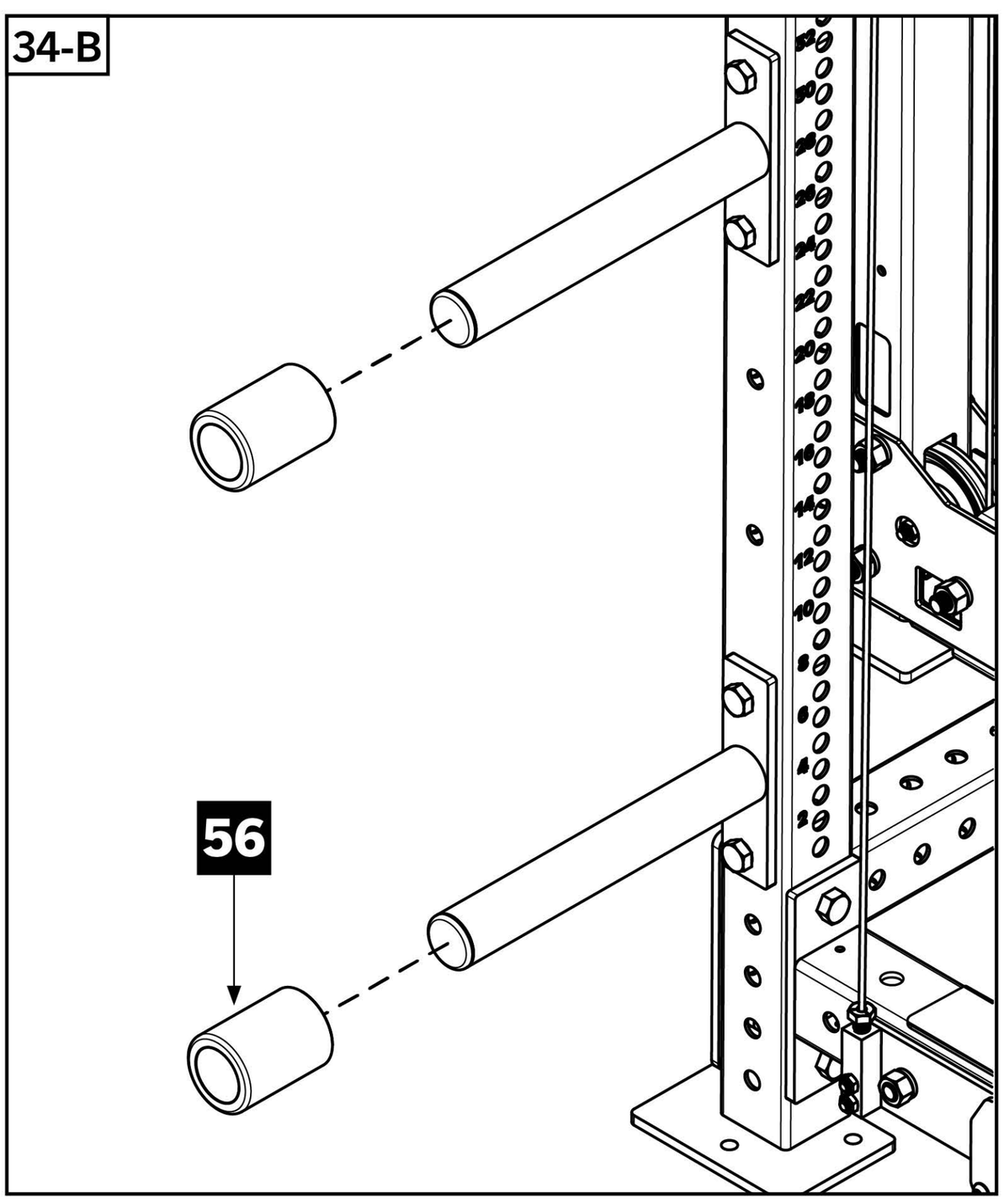

34-C

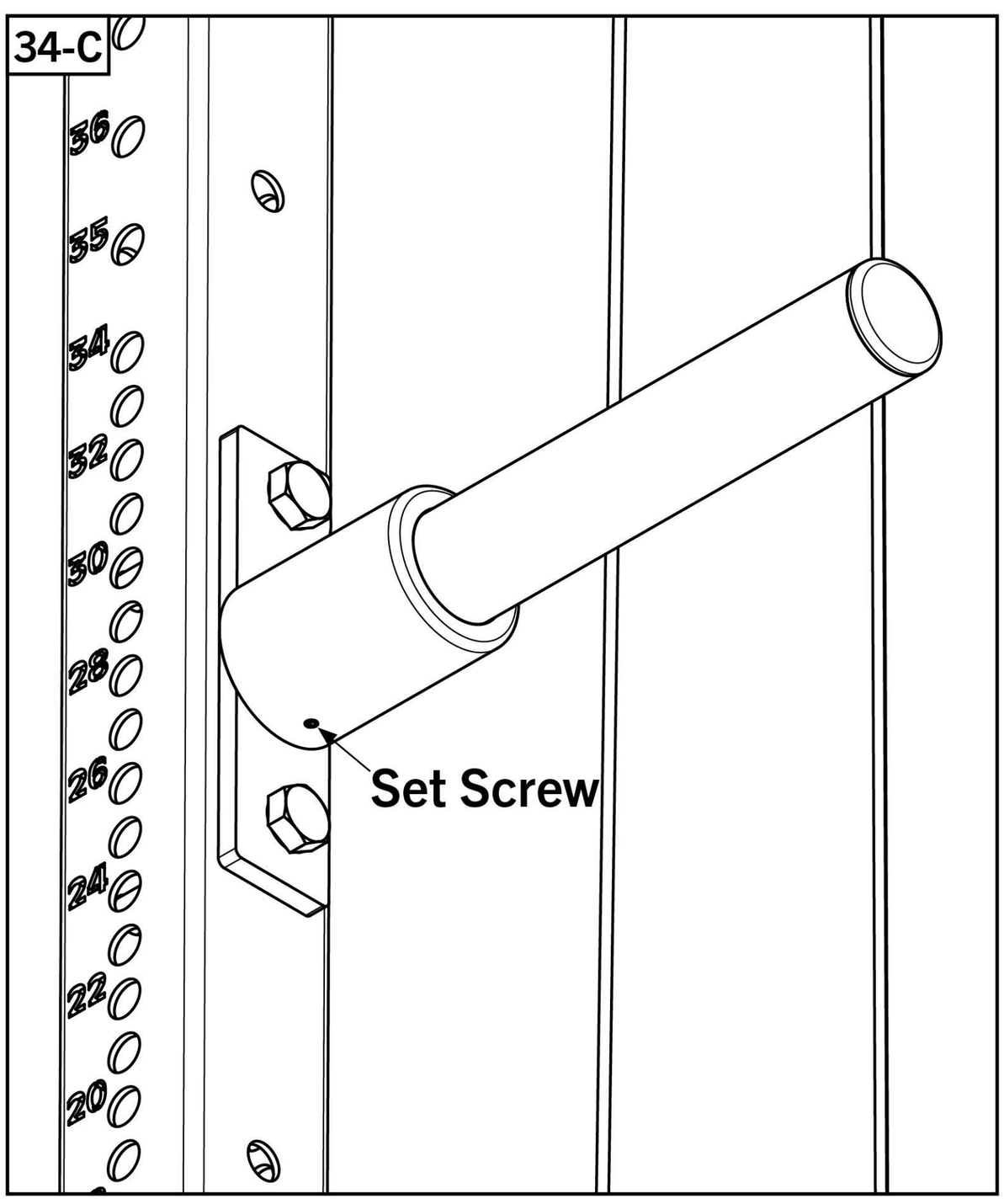

STEP 35

Tools Required:

- All
- Tighten ALL loose hardware on the entire rack.
- Starting with no weight selected on the Weight Stack, check cables by pulling on each clevis.
- If cables are too tight or loose, adjust accordingly by loosening or tightening the lower 1/2” Jam Nuts on Low Side Cables [**54**].

35-A

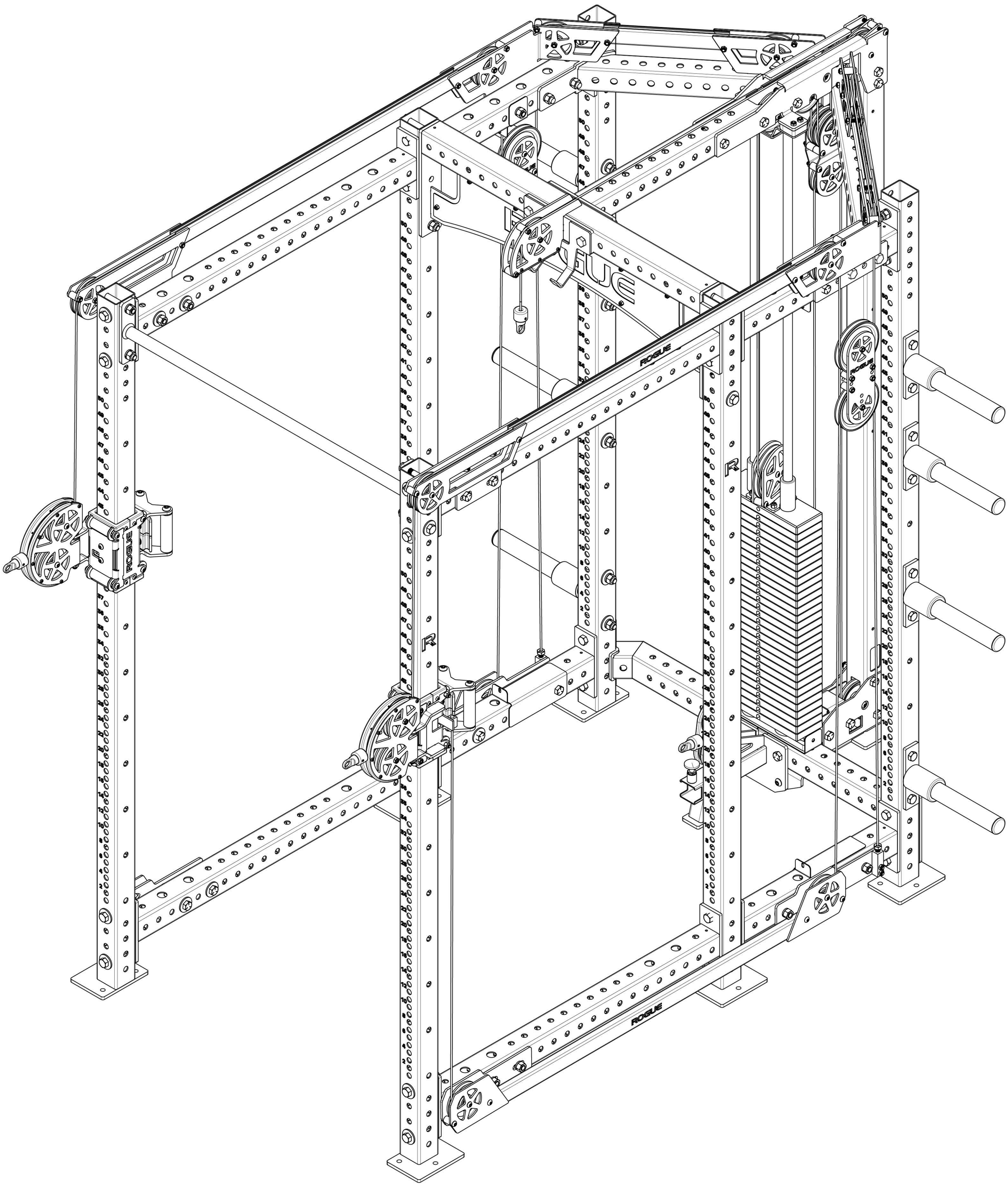

STEP 36

- Apply the Weight Stack Number Labels [**55**] on the front of the Weight Stack Plates, approximately 3.5” from the edge of plate.
- Attach key ring on Selector Pin Lanyard [**32**] to front hole on pulley plate of the Weight Stack Stem [**30**].
- Attach Single Handle Attachments [**59**] to Swivel Trolleys using included Carabiners.
- Attach Lat Bar [**57**] to Lat Pull down clevis attachment point.
- Re-insert the Footplate into Low Row Footplate Assembly [**26**] and attach Standard Grip Triangle [**58**] to clevis.

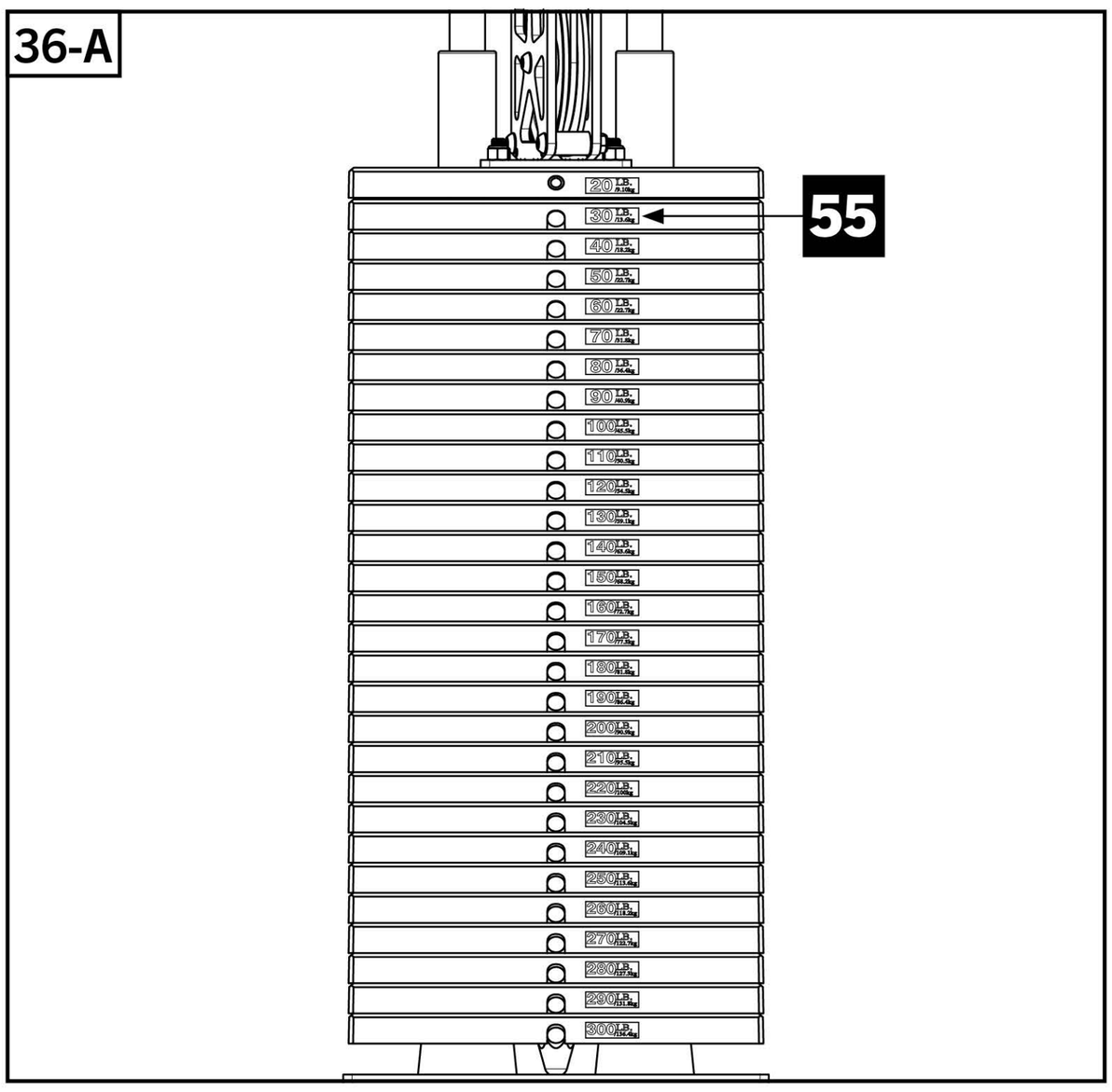

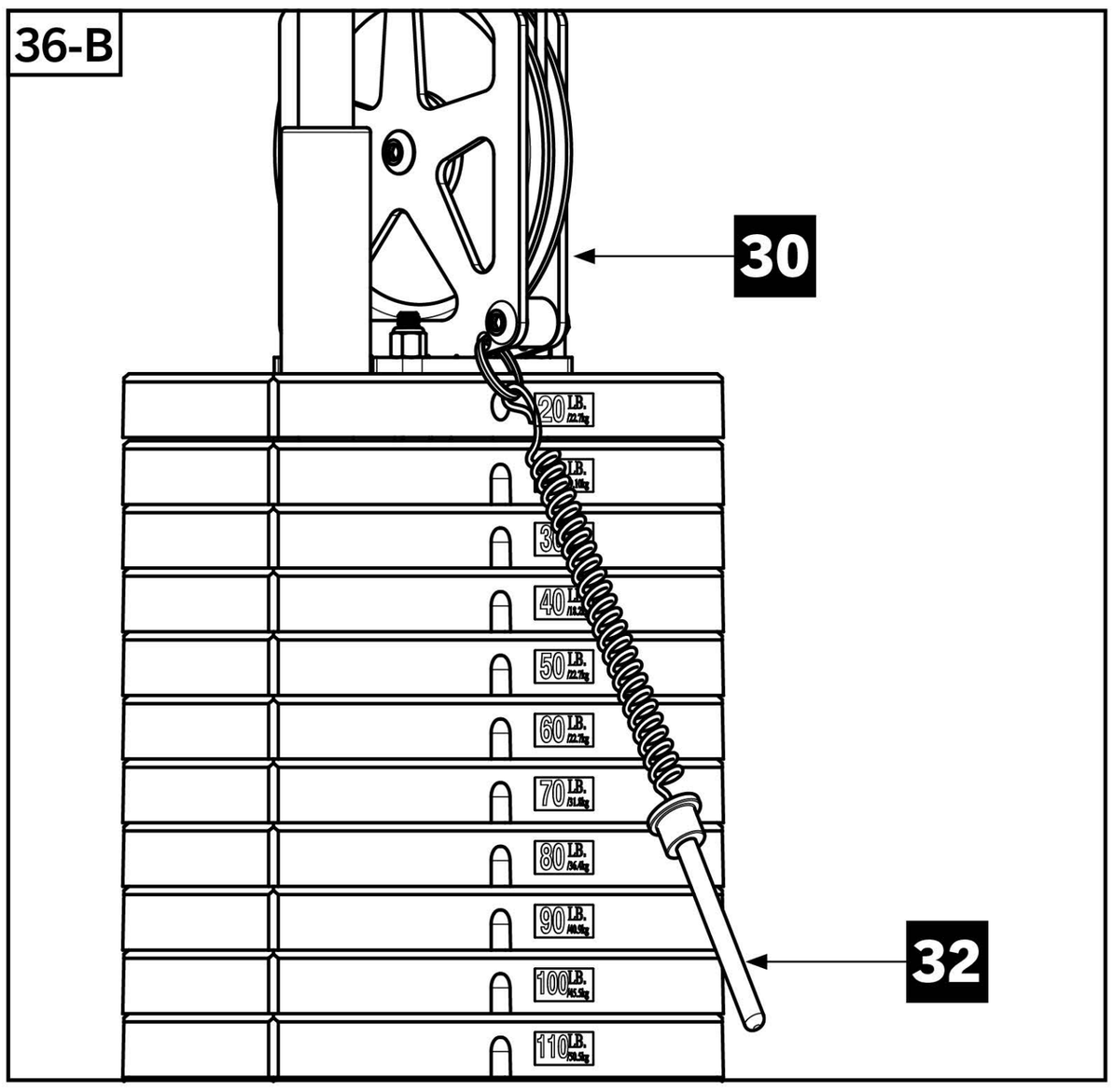

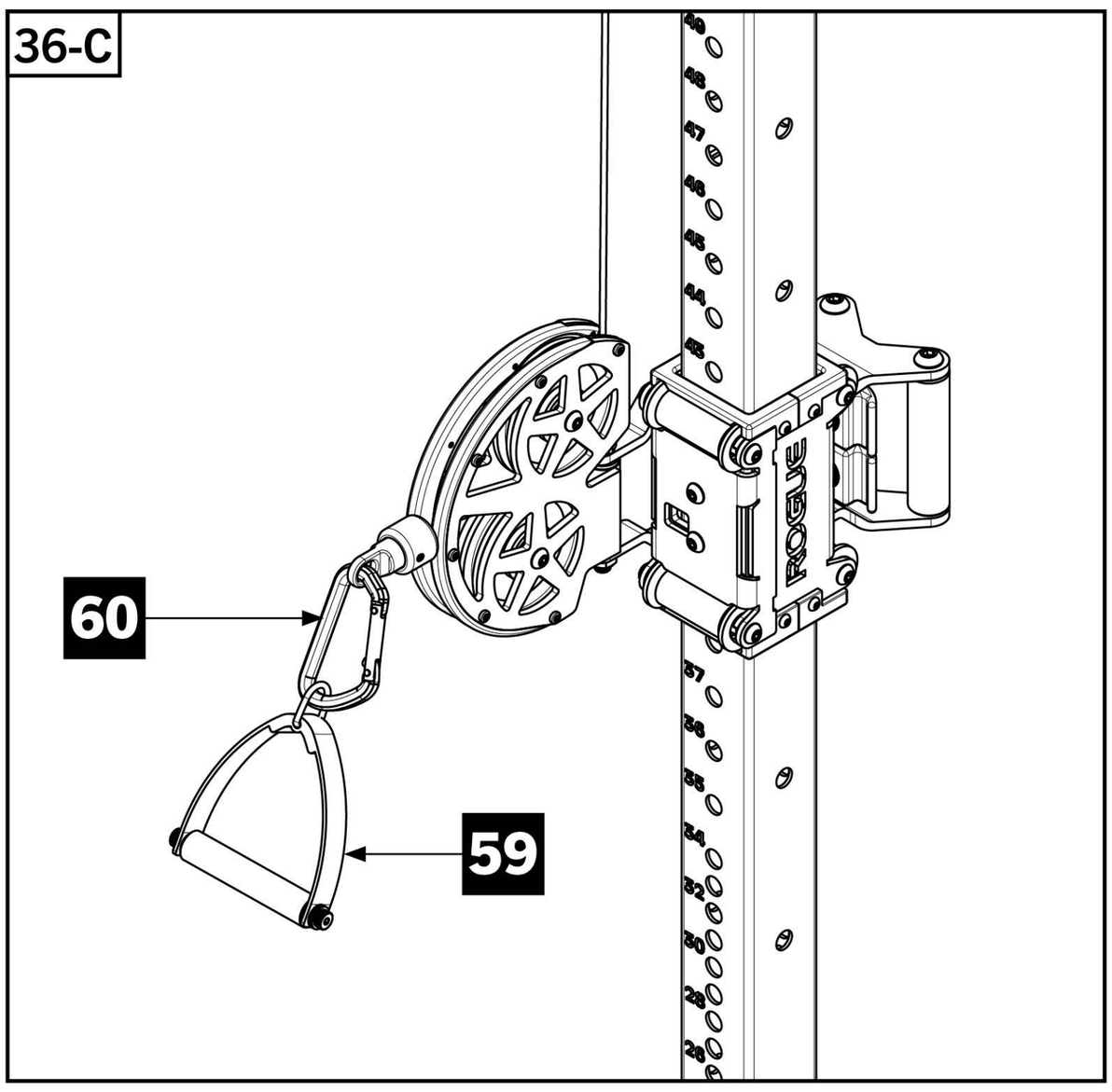

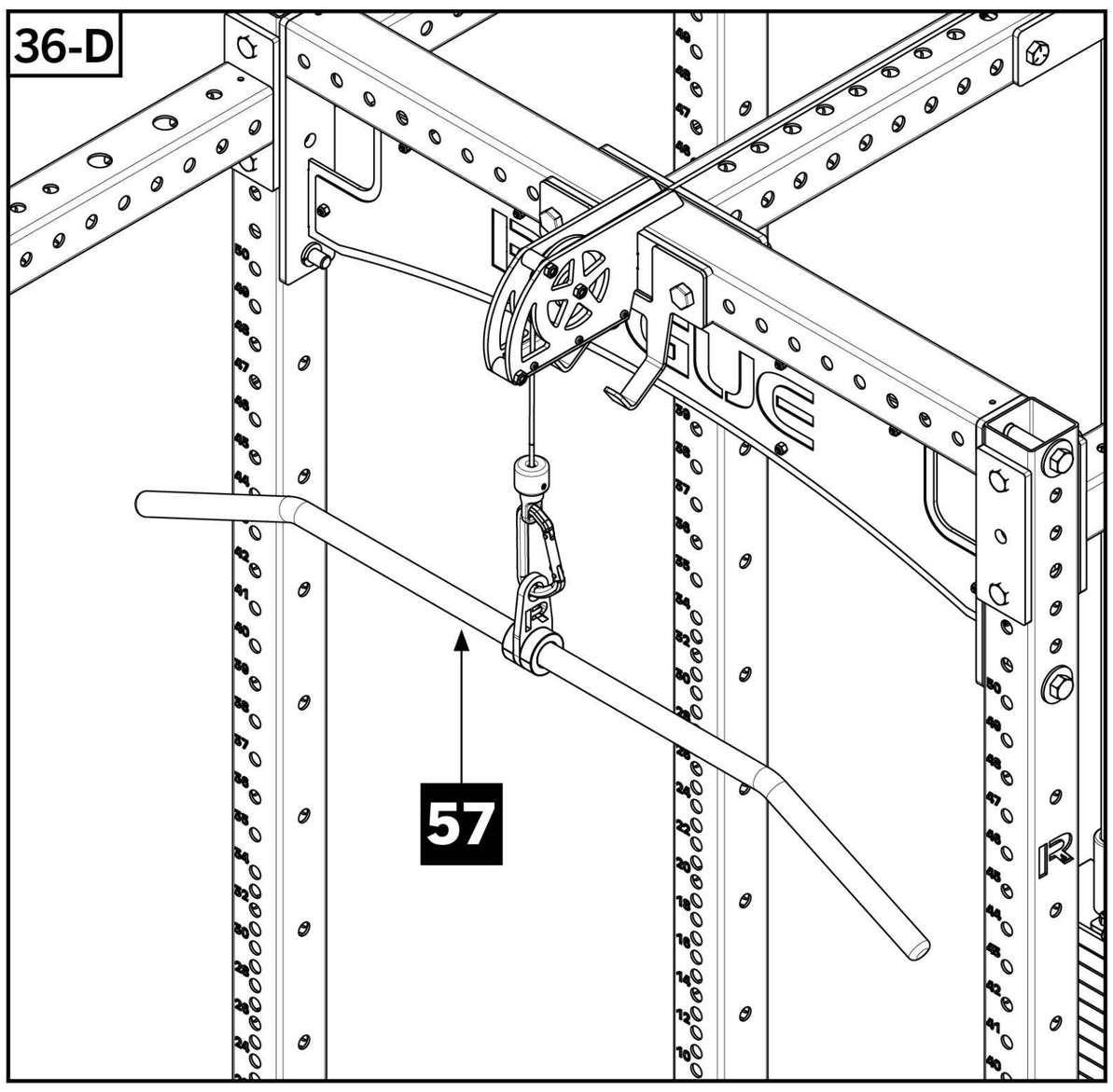

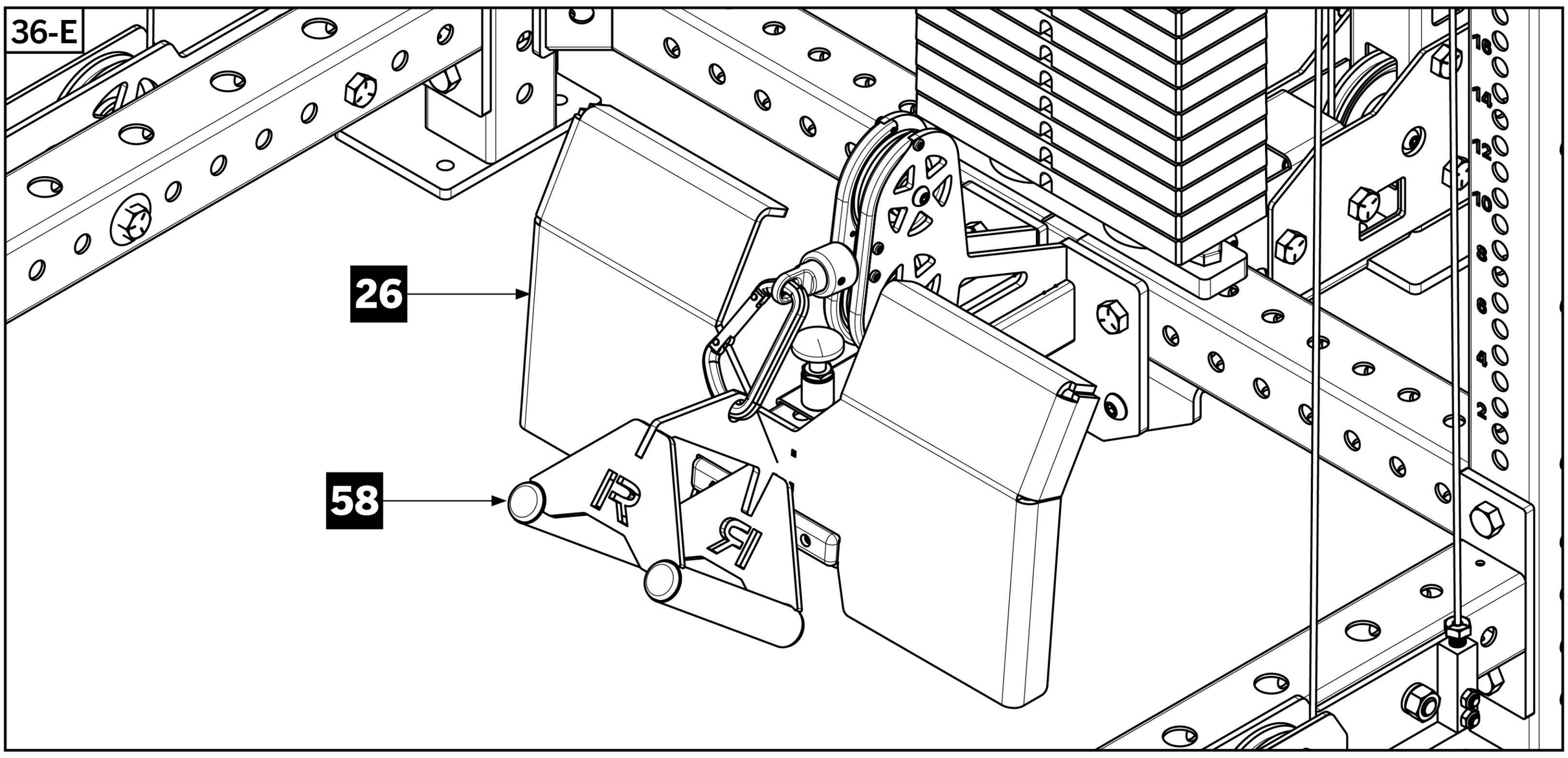

STEP 37 (SHROUD ASSEMBLY)

- Align Weight Stack Shroud RH [**75**] and Weight Stack Shroud LH [**76**] with corresponding holes on Rear 3X3 Upright [**15**] and bolt Shrouds to Upright using 1/4” x 3-1/2” Button Head Screws [**90**] and 1/4” Nylock Nuts [**92**].
- Align top holes on Shrouds to the front side of Top Rear Angle Crossmembers and bolt together using 5/8” x 4-1/2” Hex Bolts [**86**], 5/8” Flat Washers [**87**], 5/8” Lock Washers [**88**], and 5/8” Hex Nuts [**89**].
- Align and bolt the bottom holes on Shrouds to the corresponding holes on Weight Stack Shroud Bottom Bracket [**77**] using 1/4” x 5/8” Button Head Screws [**91**].

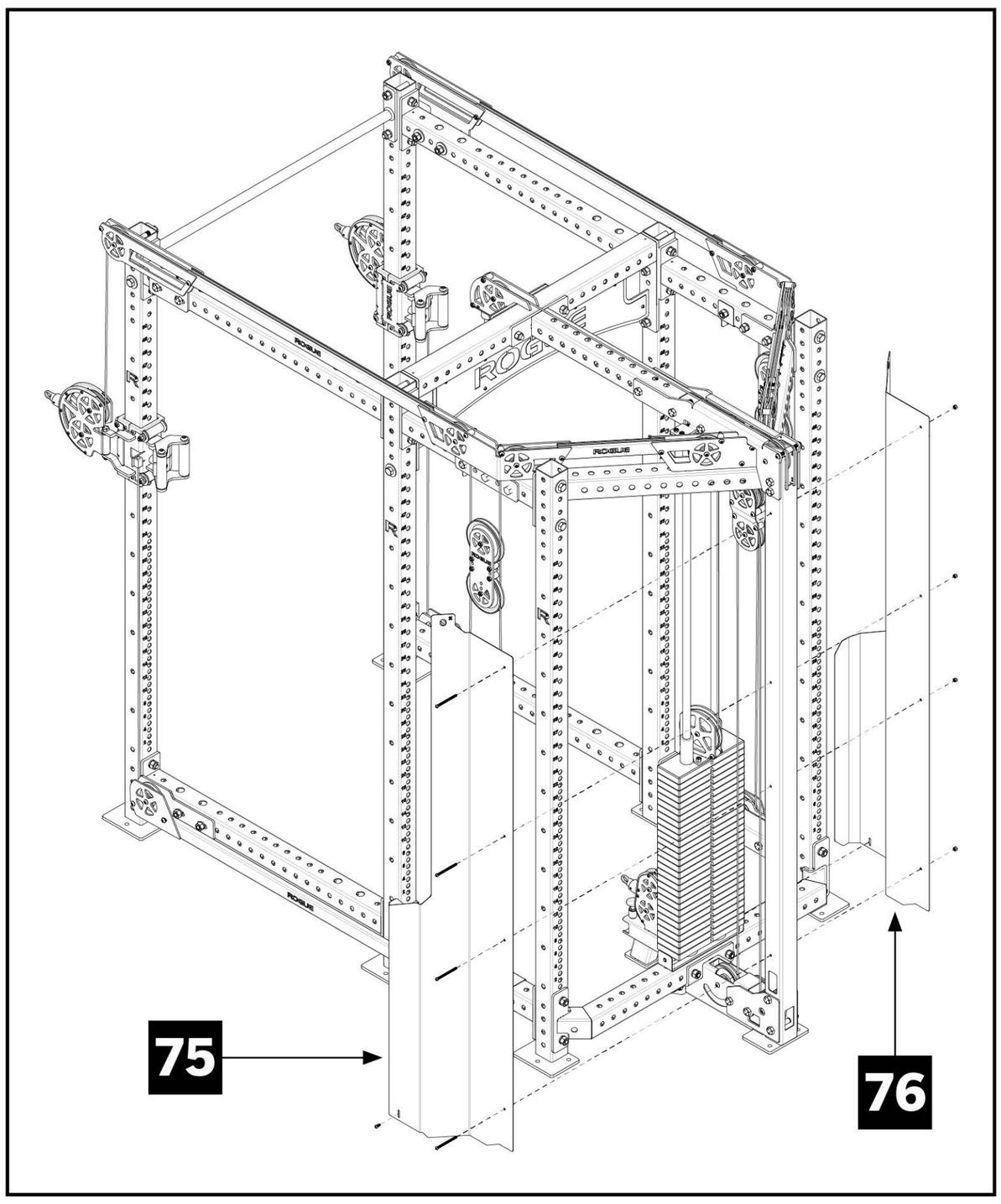

37-A

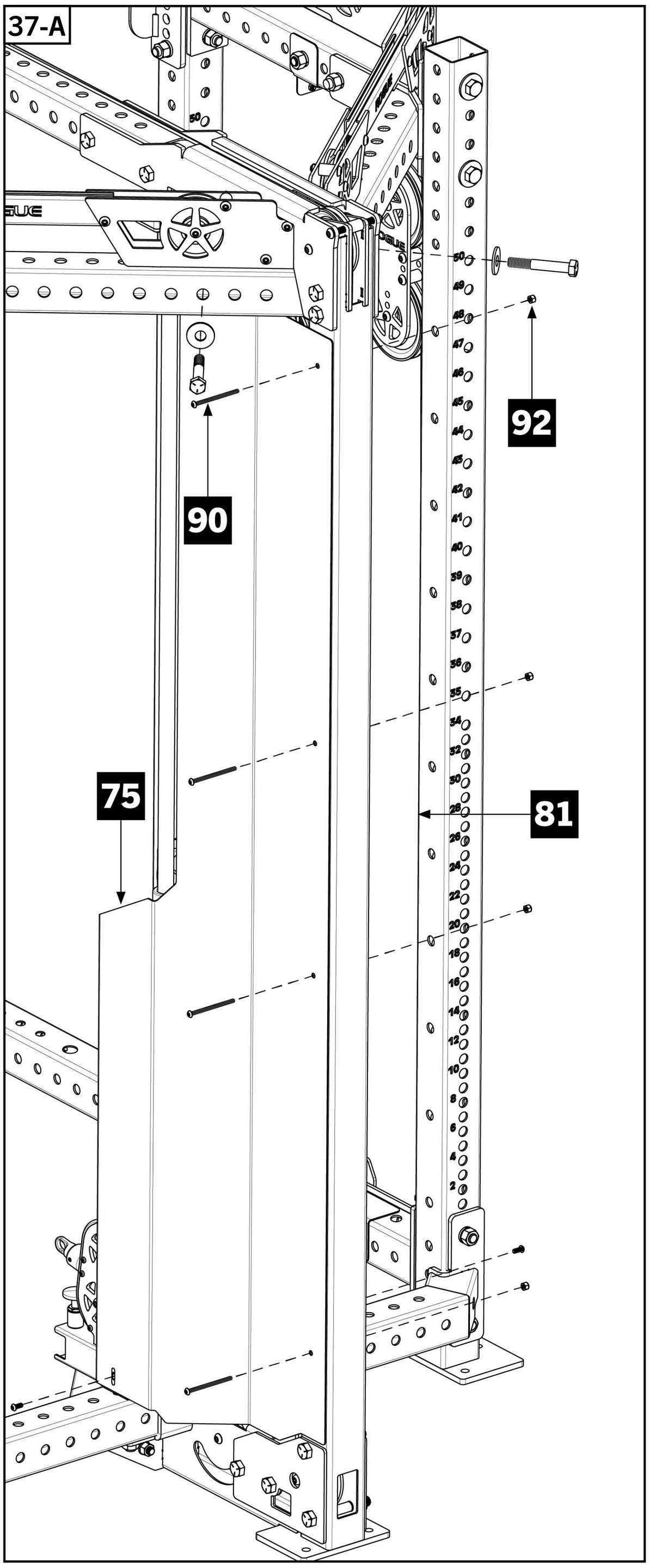

37-B

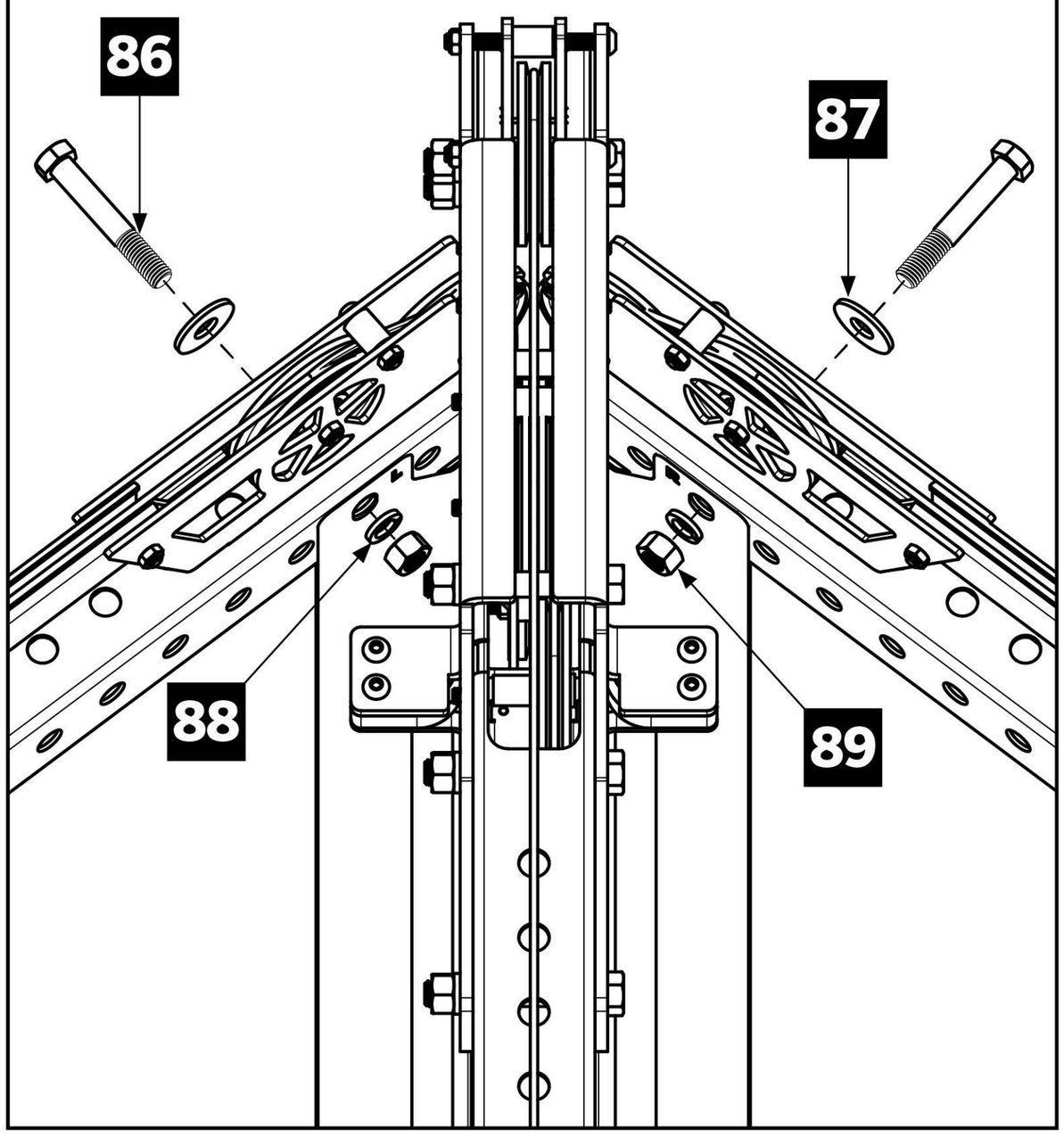

37-C

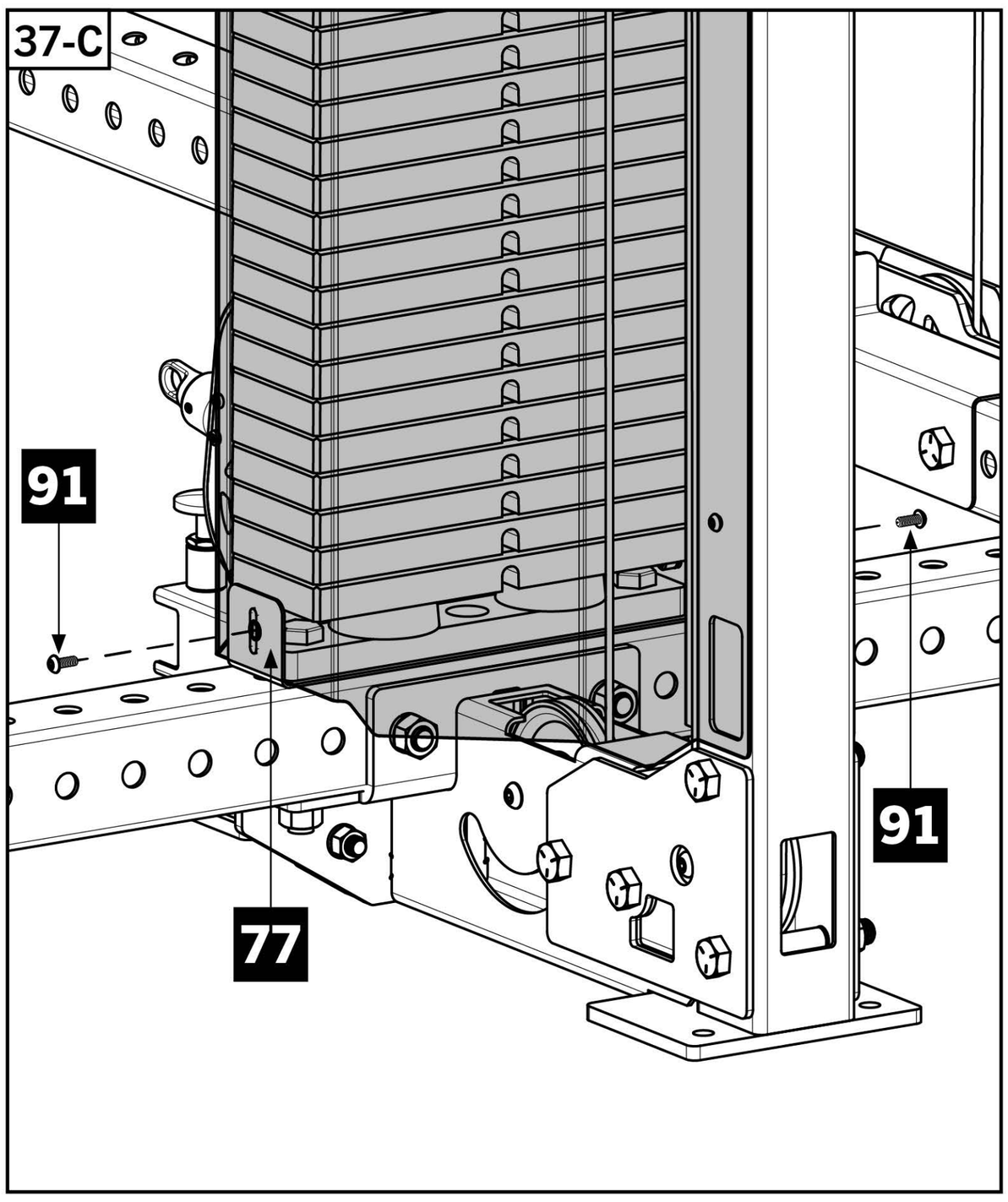

STEP 38 (SHROUD ASSEMBLY)

- Assemble Side Shroud - RH [**78**] and - LH [**79**] on rear uprights of rack using included 5/8” hardware through the highest and lowest 5/8” holes on Side Shrouds.

Note:

- Leave the 5/8” Hex Nuts shown in **38-A** and **38-B** very loose until Storage Panels are assembled on the next step.

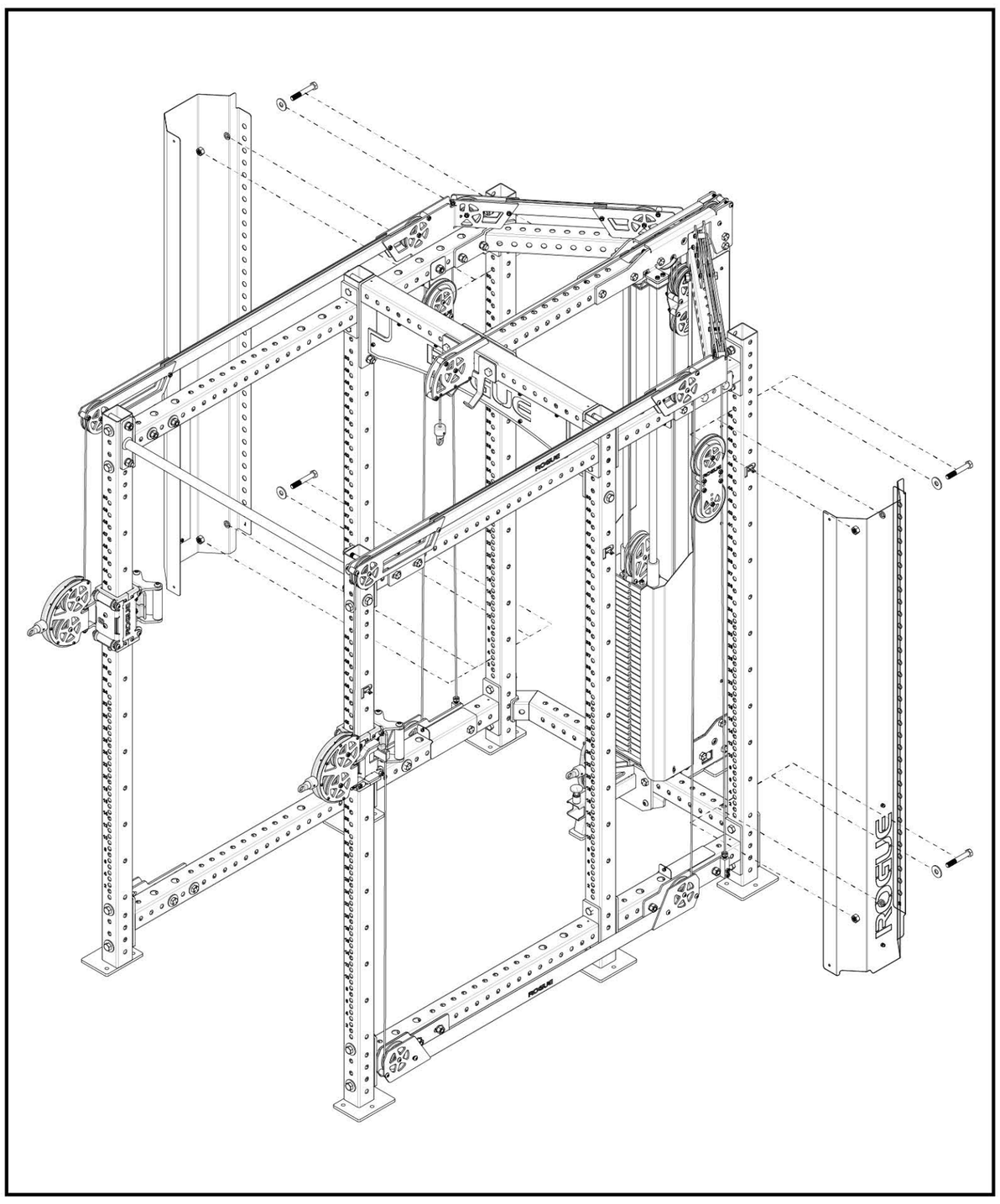

38-A

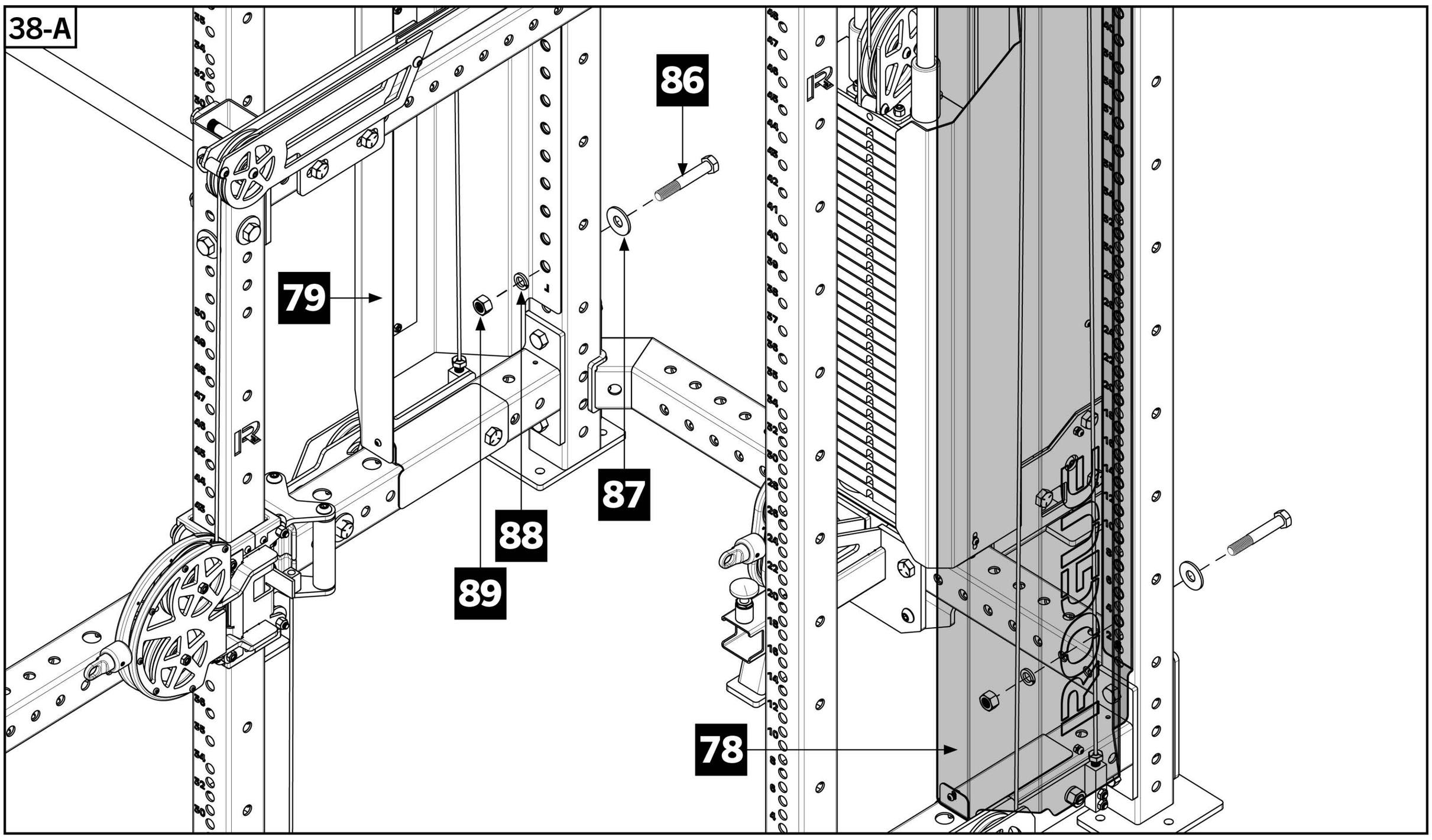

38-B

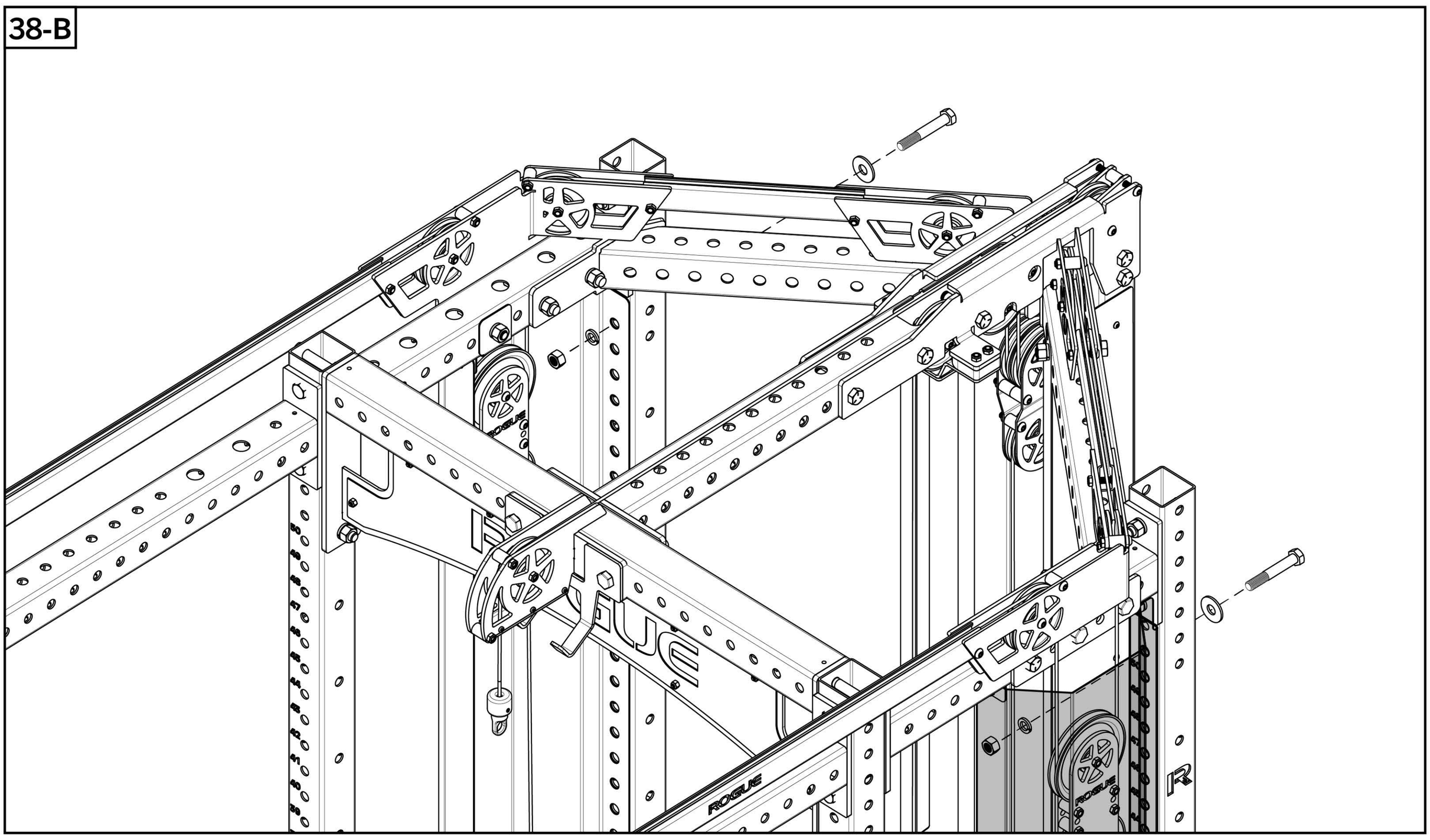

STEP 39 (SHROUD ASSEMBLY)

Tools Required:

- 15/16” Wrench, 5/32” Allen Key, 7/16” Wrench
- Attach rear top and bottom holes on Storage Panels [**80**],[**81**] to horizontal 5/8” hardware installed on previous step, and align 1/4” holes on front with 1/4” holes on Side Shrouds and Shroud Brackets.
- Bolt both Side Shrouds and Storage Panels to Bottom Brackets using four 1/4” x 5/8” Button Head Screws [**91**] and four 1/4” Thin Nylock Nuts [**93**].
- Fully tighten all Shroud Kit hardware.

Note:

- Only the LH Storage Panel shown below. Repeat steps below to assemble the RH Storage Panel onto Side Shroud RH.

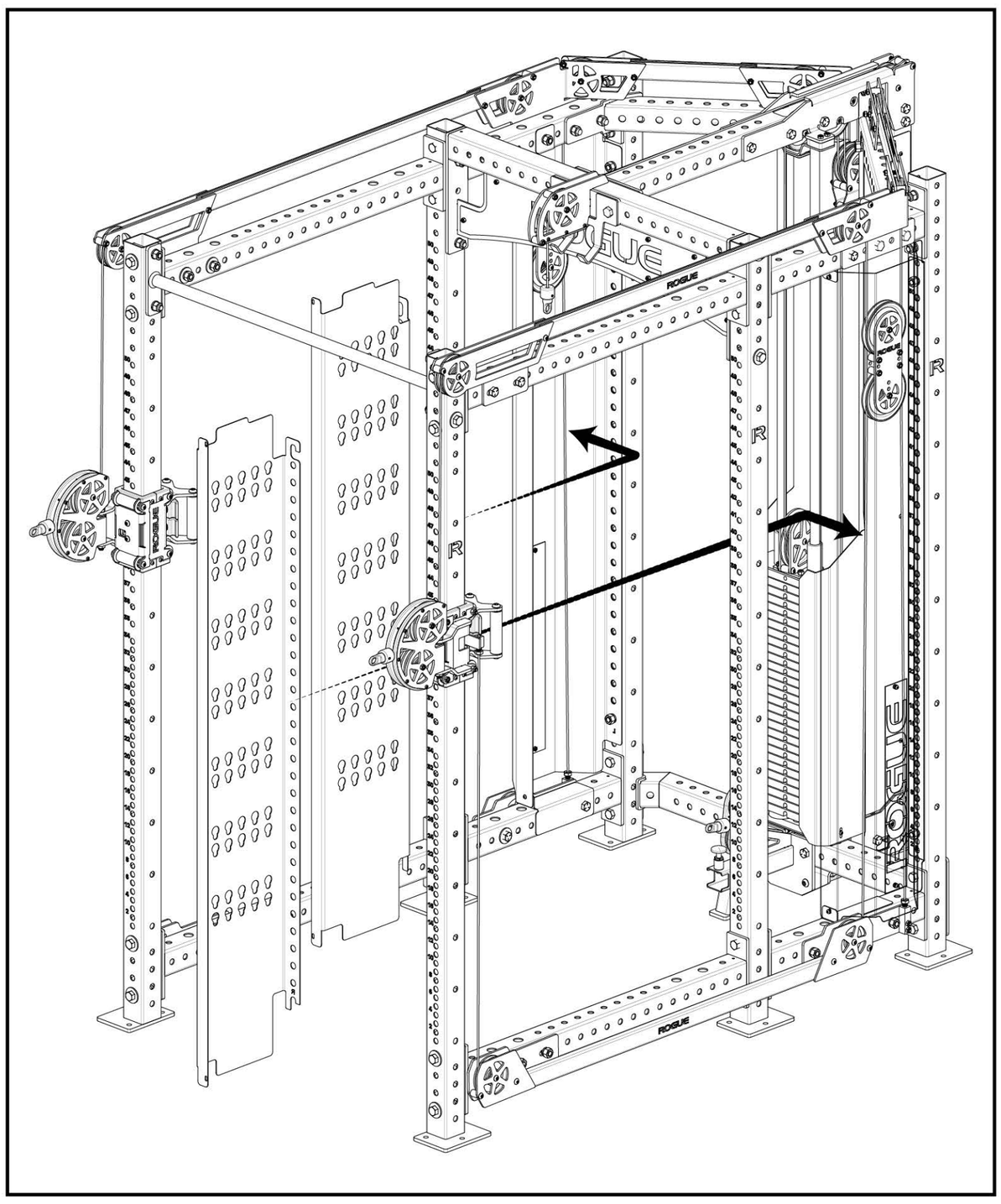

39-A

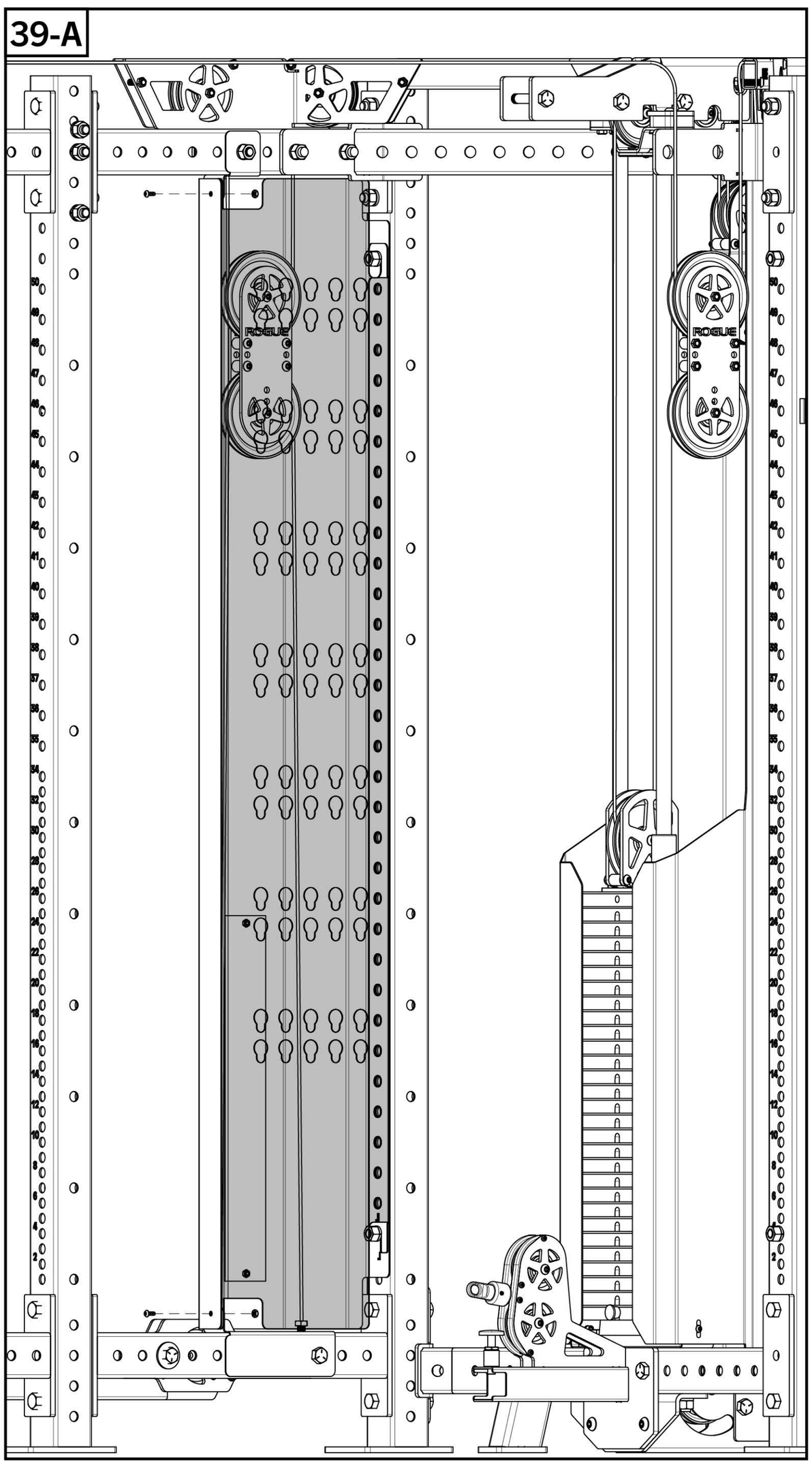

39-B

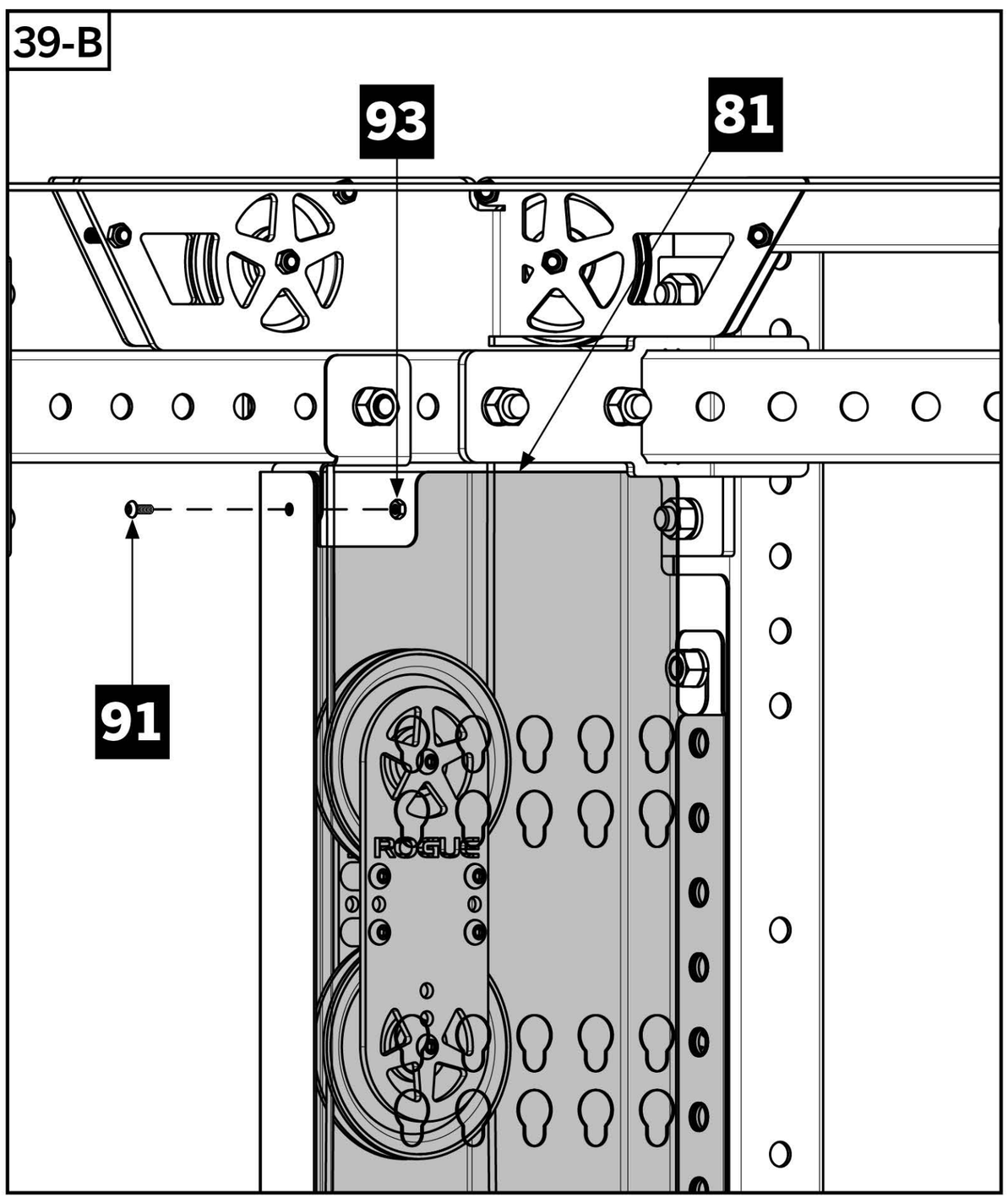

39-C

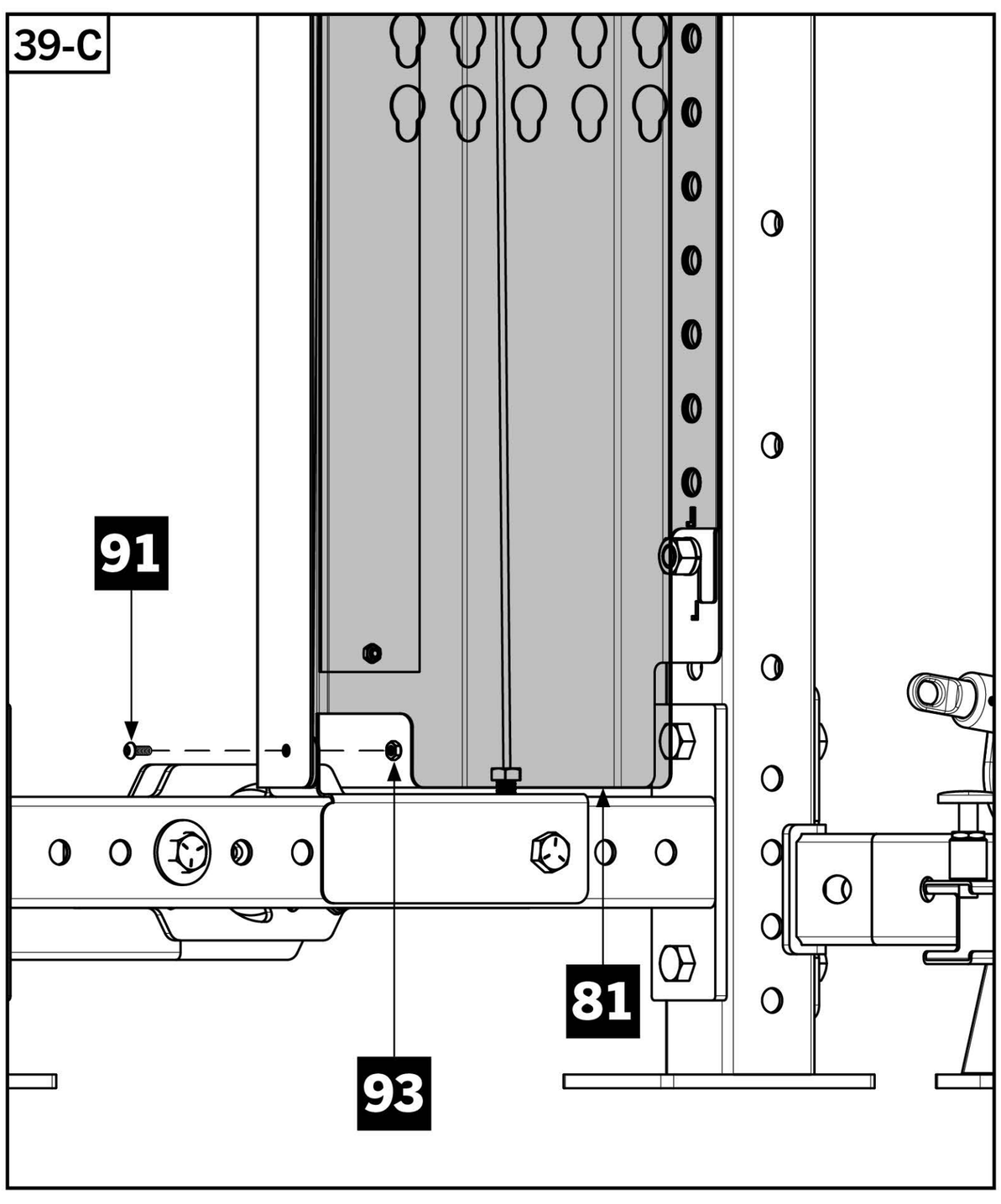

DETAIL

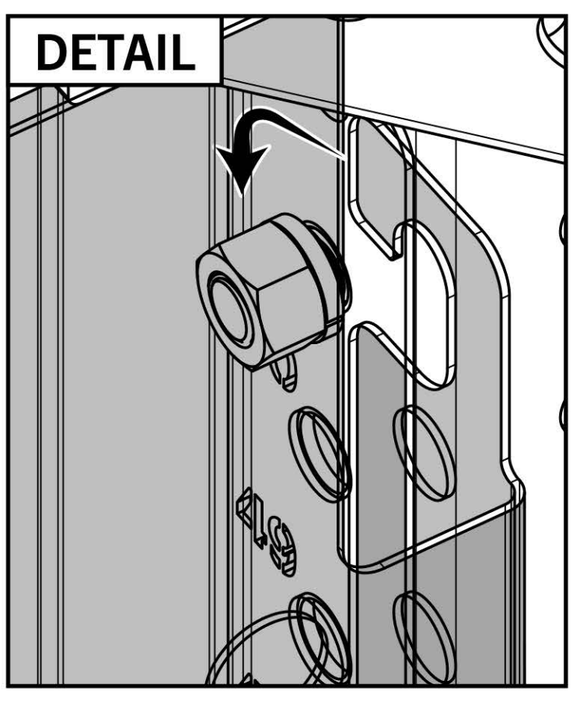
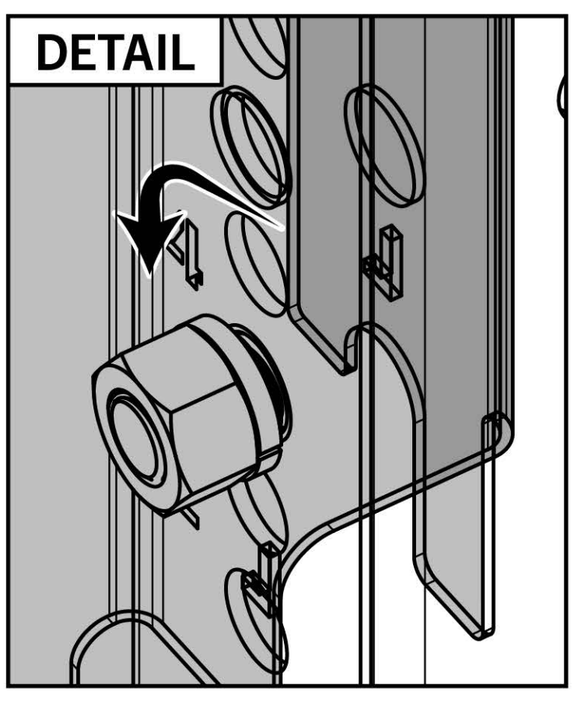
DETAIL