ROGUE®

FM-HR FUNCTIONAL TRAINER

WEIGHT STACK OPTION

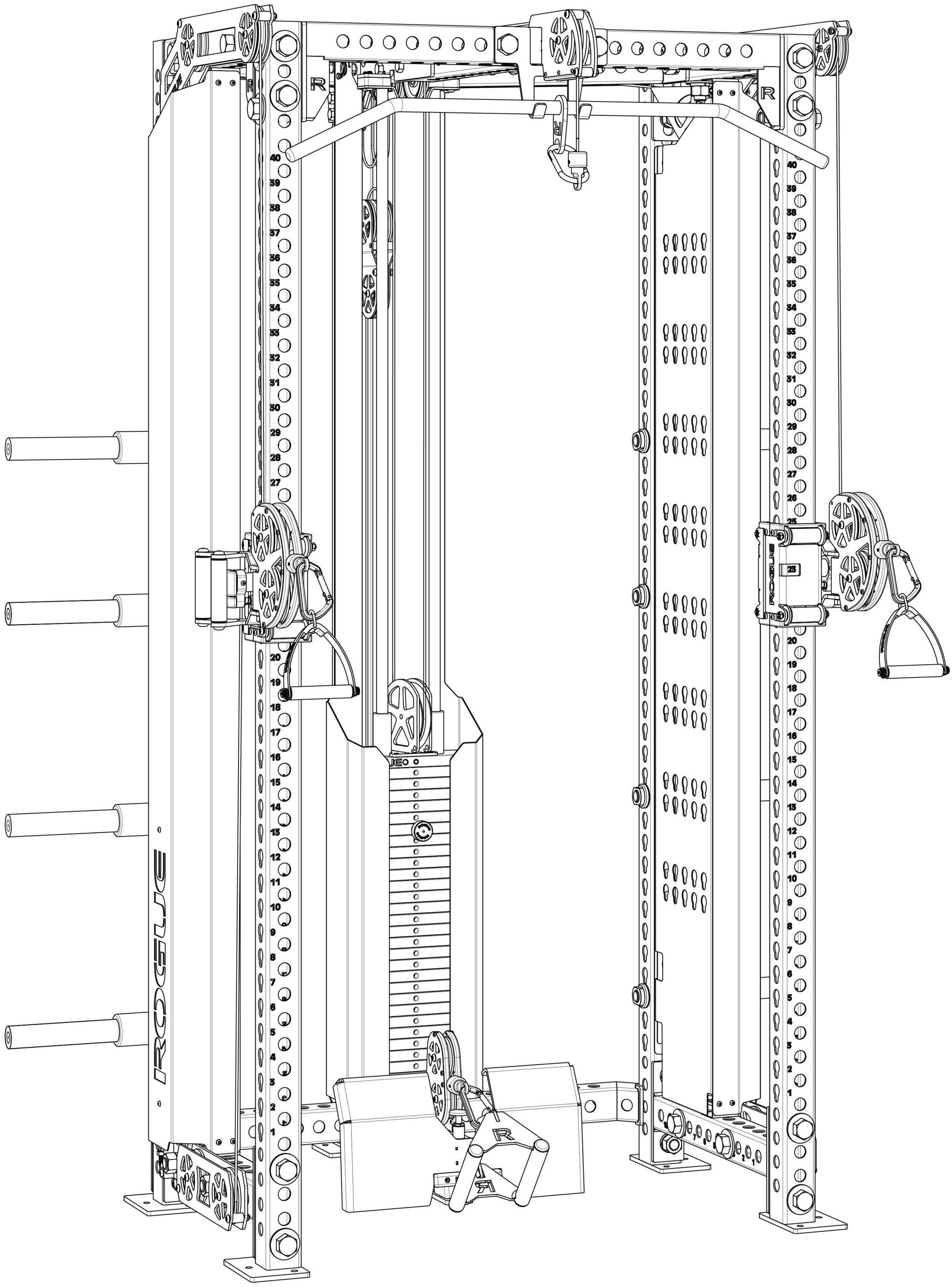

⚠ IMPORTANT SAFETY INFORMATION

DISCLAIMER:

Resistance training, gymnastics training, and activities at height are potentially dangerous and may lead to severe injury or even death. Use common sense when training, obtain instruction in the proper execution of movements, and understand your limitations. This equipment must only be used by competent and responsible persons. Obtaining instruction in appropriate techniques and methods of use is your own responsibility. You assume all risks and responsibilities for all damage, injury or death which may occur during or following incorrect use of this equipment in any matter whatsoever. Rogue Fitness bears no liability beyond the replacement value of the equipment in question.

WARNING:

THIS RACK MUST BE BOLTED TO THE FLOOR BEFORE USE.
MINIMUM TWO PEOPLE REQUIRED FOR SAFE ASSEMBLY.
MISUSE OF THIS RACK CAN RESULT IN SEVERE INJURY.

Both Rogue Fitness and buyer disclaim any express or implied warranty, including, without limitation, warranties or merchantability and/or fitness for a particular purpose with respect to the equipment. Buyer assumes all liability to use of equipment.

TABLE OF CONTENTS

FM-HR

Included Tools.....3

Included Parts.....4

Assembly.....13

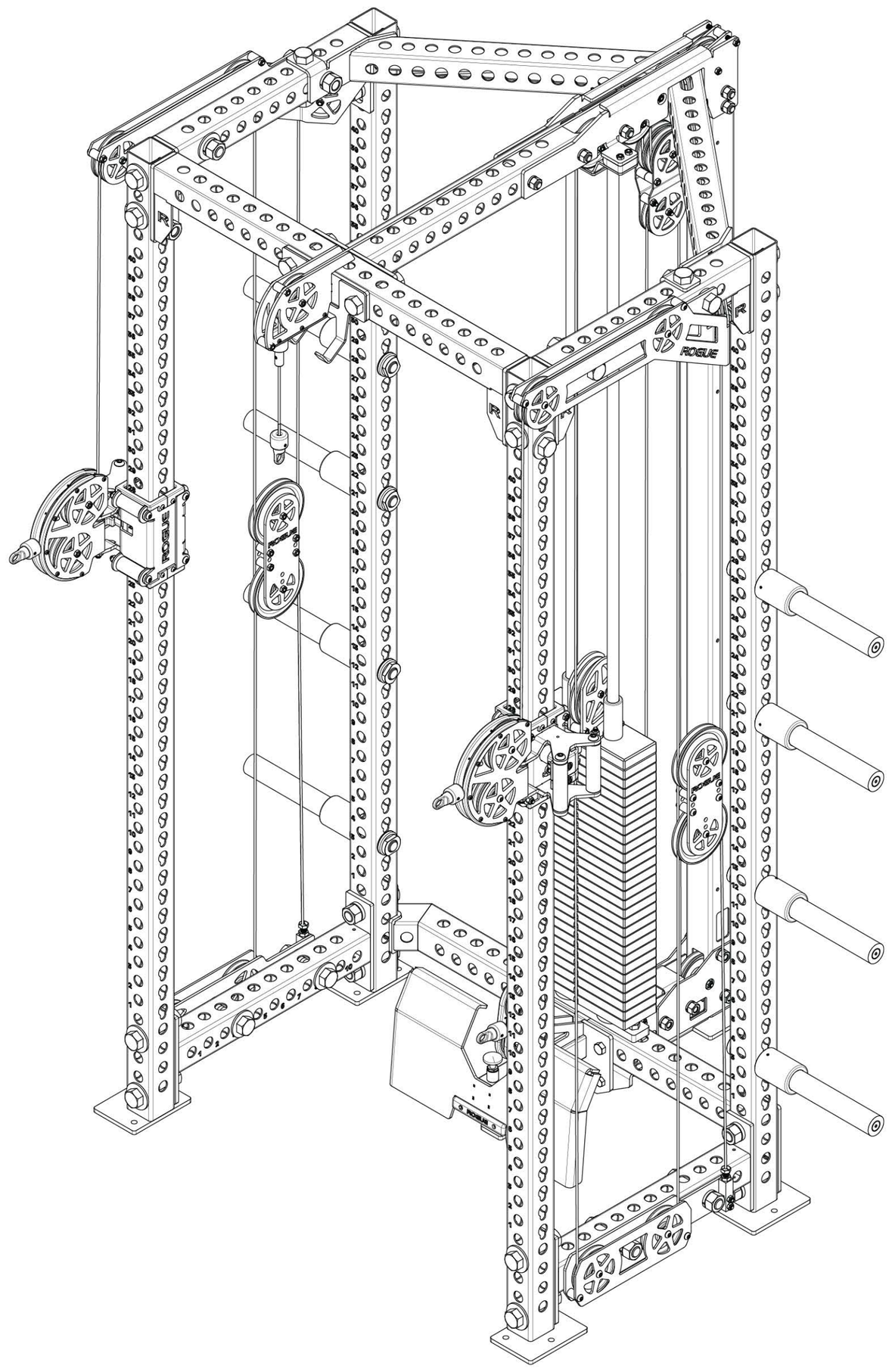

FM-HR SHROUD KIT

Included Tools.....3

Included Parts.....10

Assembly.....45

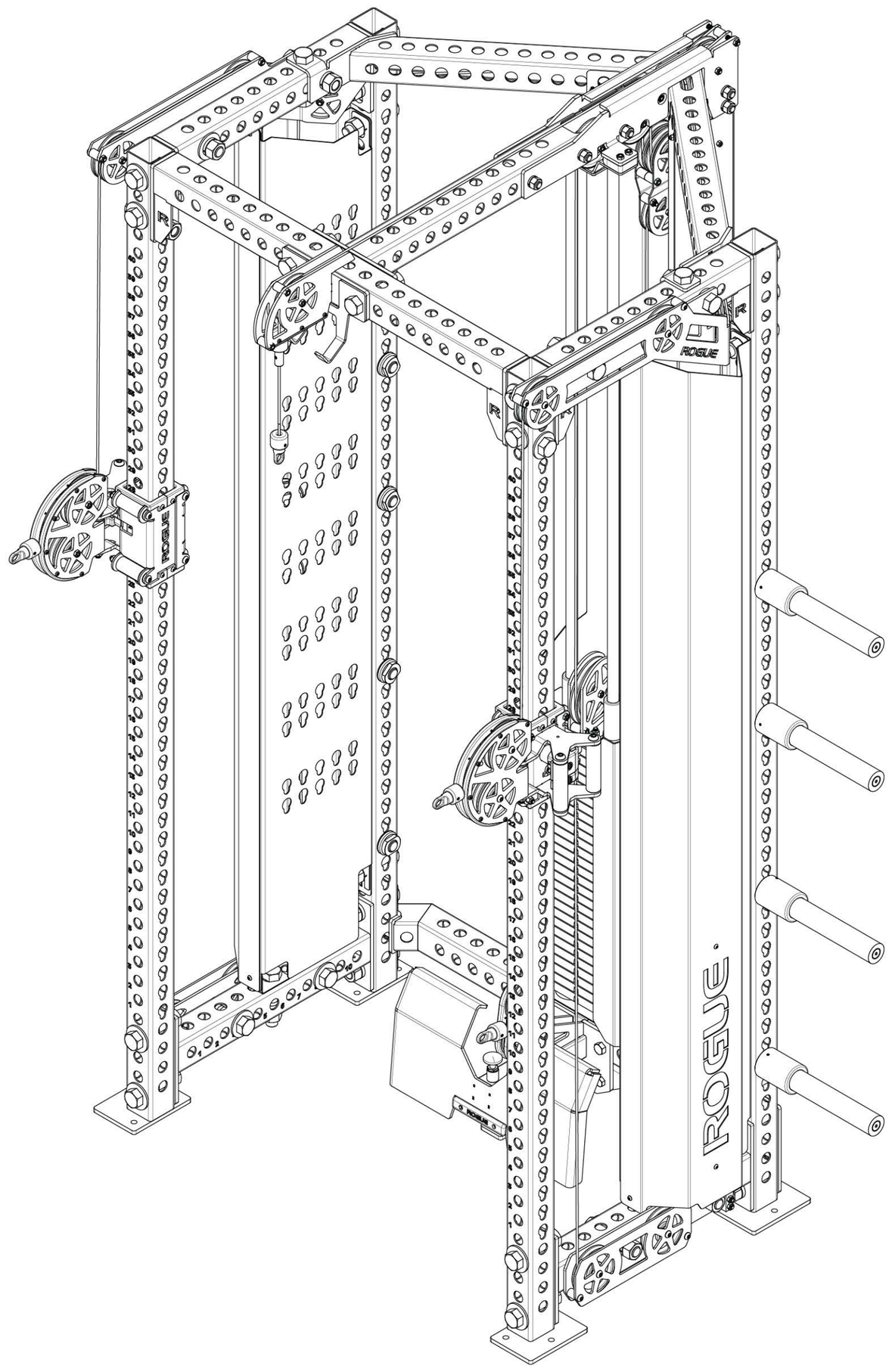

INCLUDED TOOLS

Note: Images not shown at scale

1 Qty: **2x**

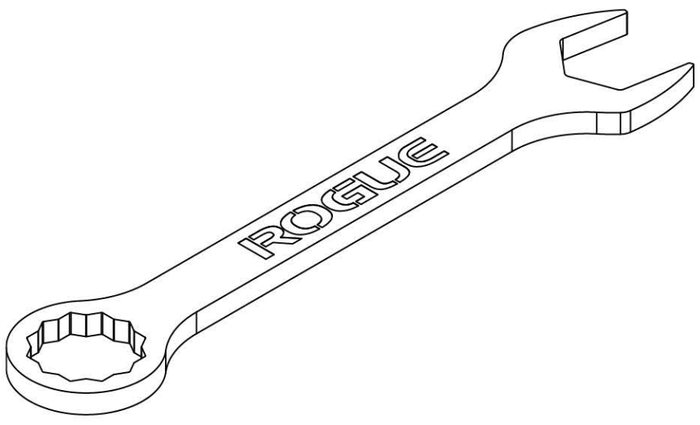

1-1/2” Wrench

2 Qty: **2x**

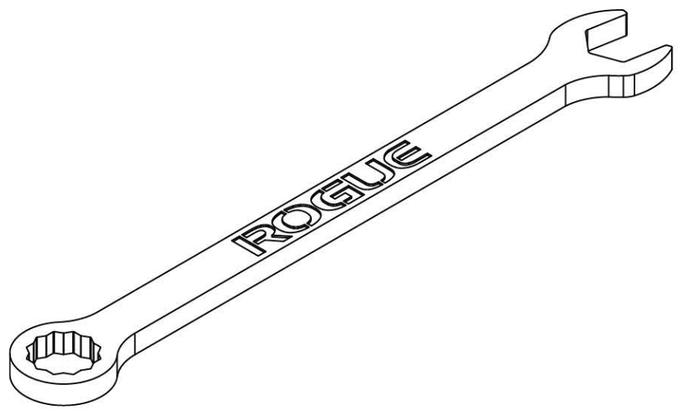

15/16” Wrench

3 Qty: **1x**

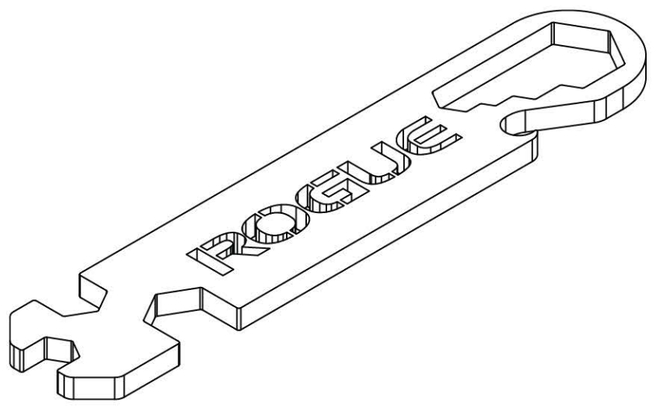

Multi Tool (3/4”, 9/16”, and 7/16” Wrench)

4 Qty: **1x**

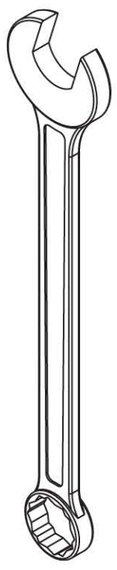

5/8” Wrench

5 Qty: **1x**

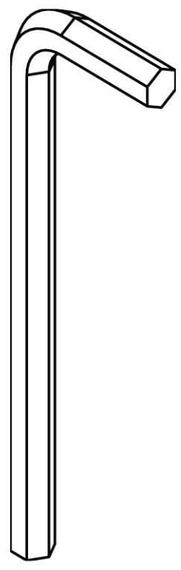

3/8” Allen Key

6 Qty: **1x**

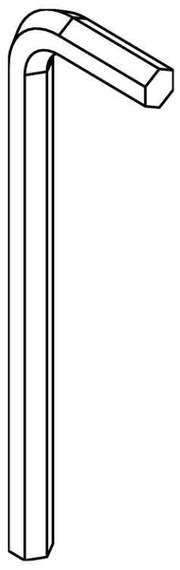

5/16” Allen Key

7 Qty: **1x**

7/32” Allen Key

8 Qty: **1x**

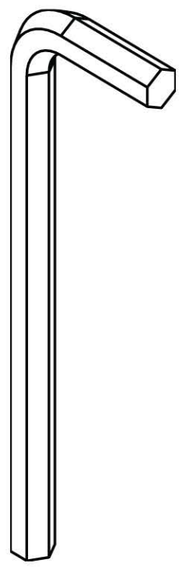

5/32” Allen Key

9 Qty: **1x**

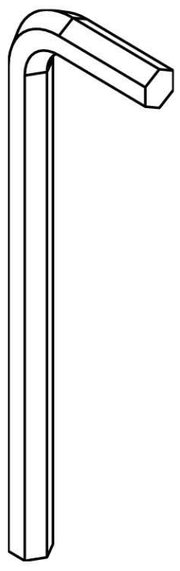

1/8” Allen Key

10 Qty: **1x**

3/32” Allen Key

INCLUDED PARTS: FM-HR

Note: Images not shown at scale.

1 Qty: **4x**

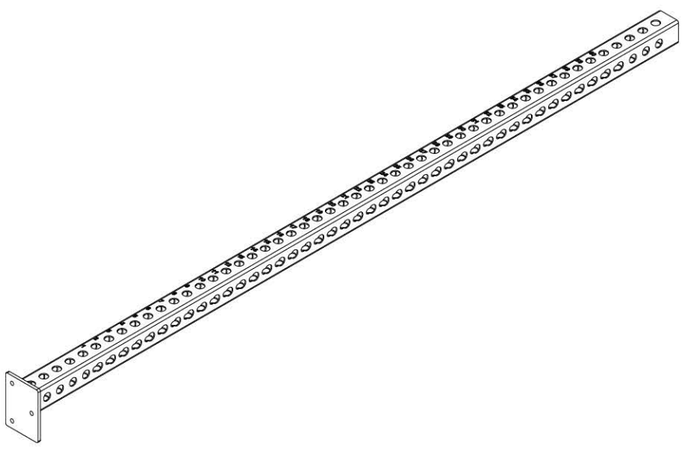

90” or 100” Monster Upright

2 Qty: **1x**

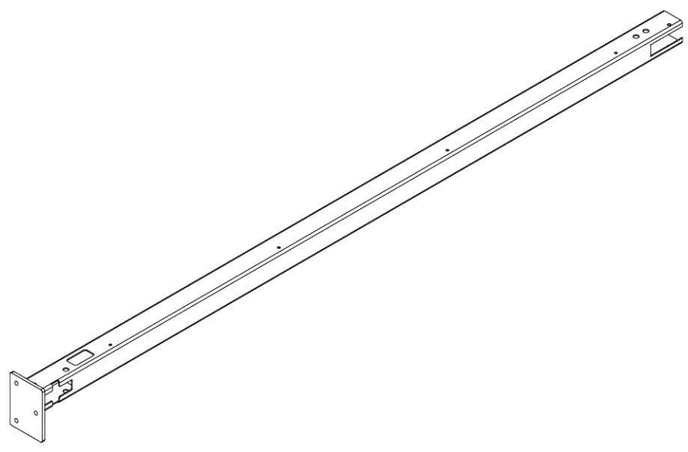

90” or 100” Rear 3X3 Upright

3 Qty: **1x**

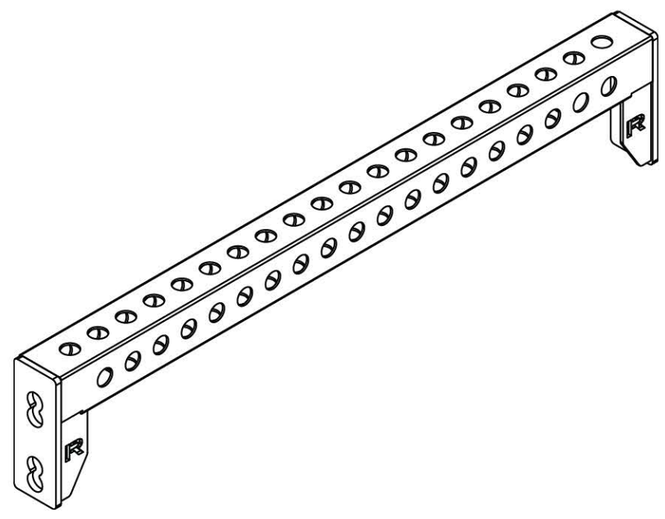

43” Spanning Crossmember

4 Qty: **2x**

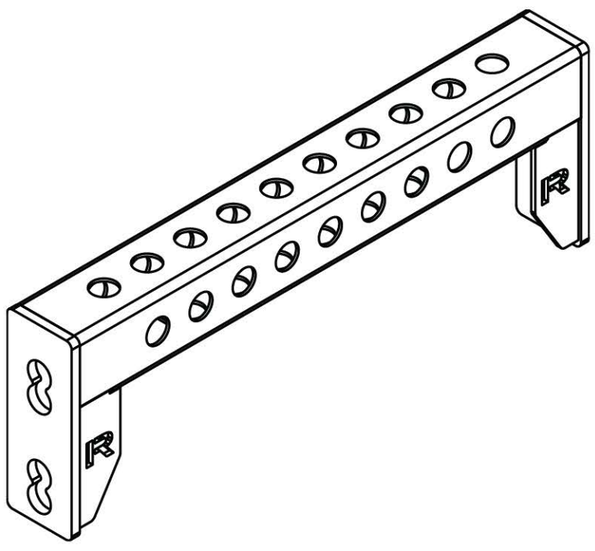

24” Top Crossmember

5 Qty: **2x**

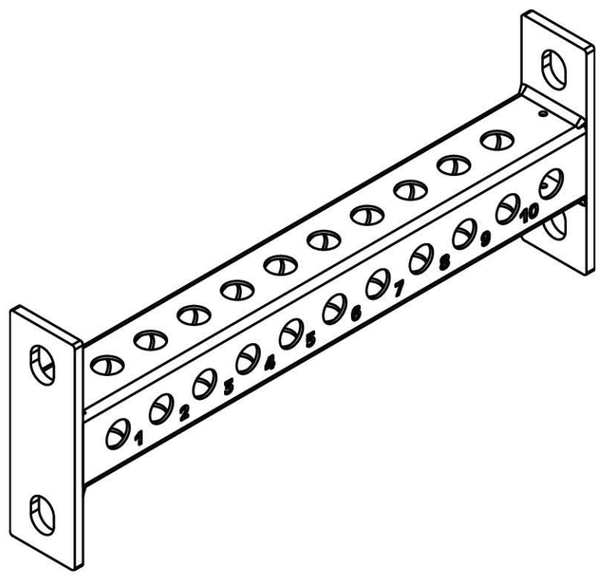

24” Low Crossmember

6 Qty: **1x**

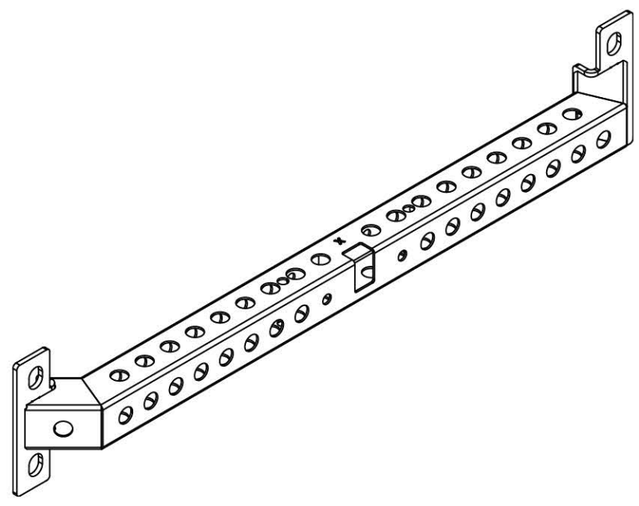

Low Row Crossmember

7 Qty: **1x**

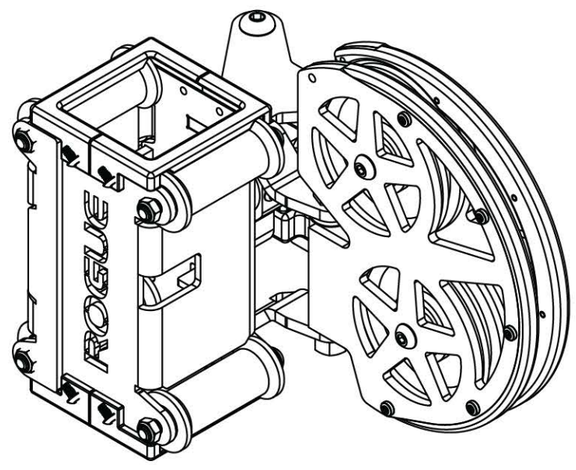

Swivel Trolley RH

8 Qty: **1x**

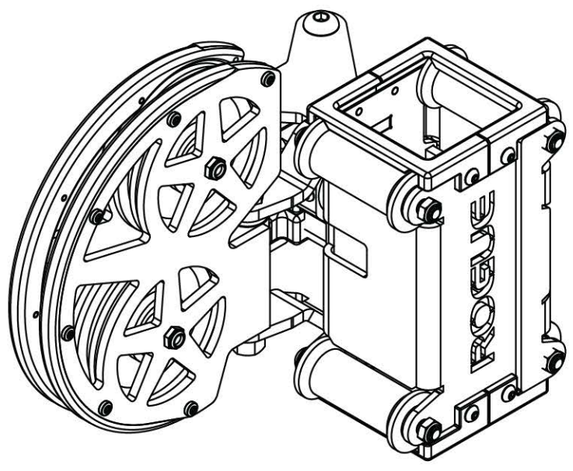

Swivel Trolley LH

9 Qty: **2x**

*

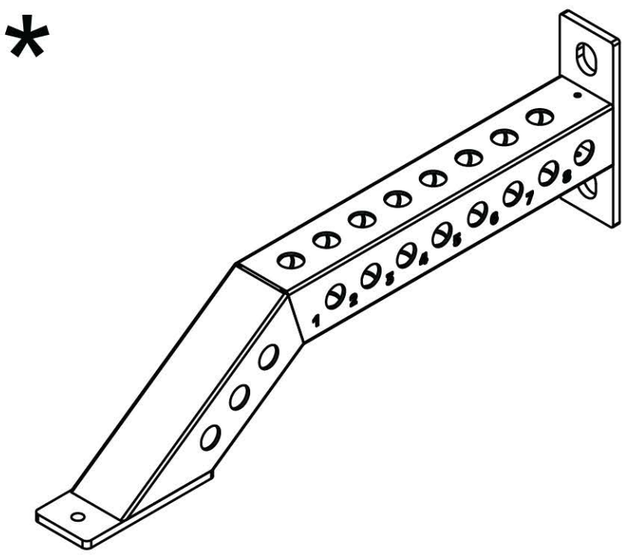

Half Rack Foot

10 Qty: **1x**

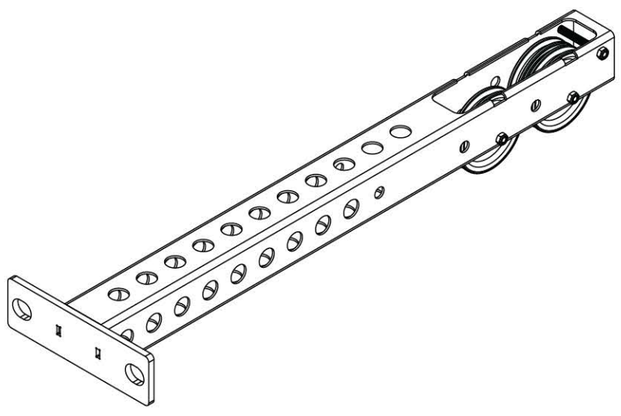

Top Center Crossmember

11 Qty: **1x**

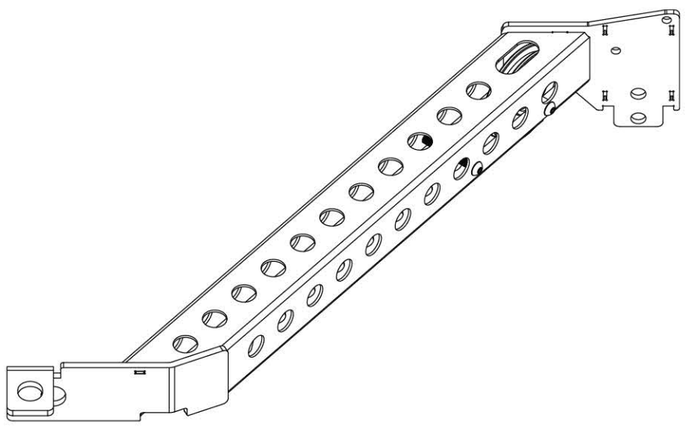

Top Rear Angle Crossmember - RH

12 Qty: **1x**

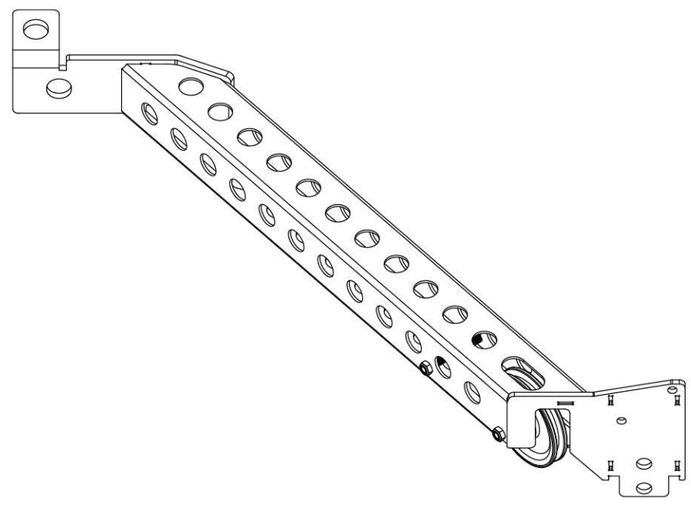

Top Rear Angle Crossmember - LH

* Only included if Half Rack Feet were purchased at checkout.

INCLUDED PARTS: FM-HR

Note: Images not shown at scale.

13 Qty: **1x**

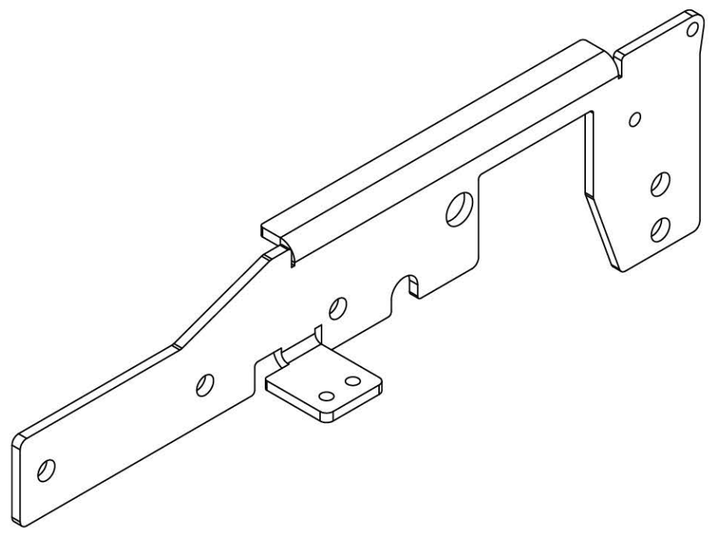

Top Rear Connector Plate - RH

14 Qty: **1x**

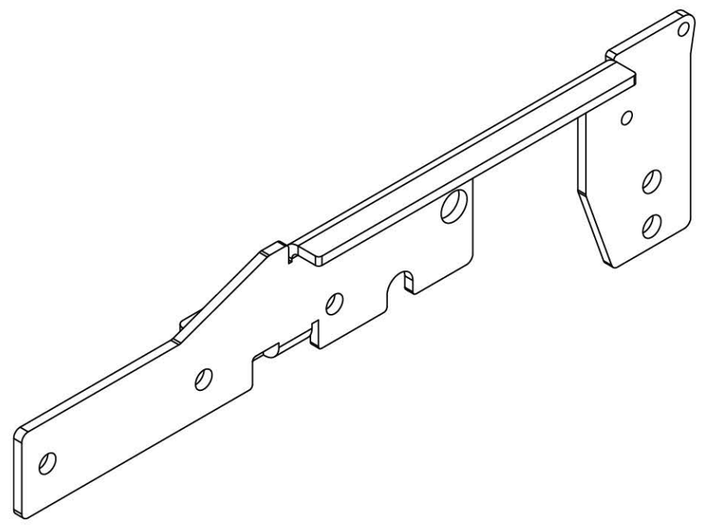

Top Rear Connector Plate - LH

15 Qty: **1x**

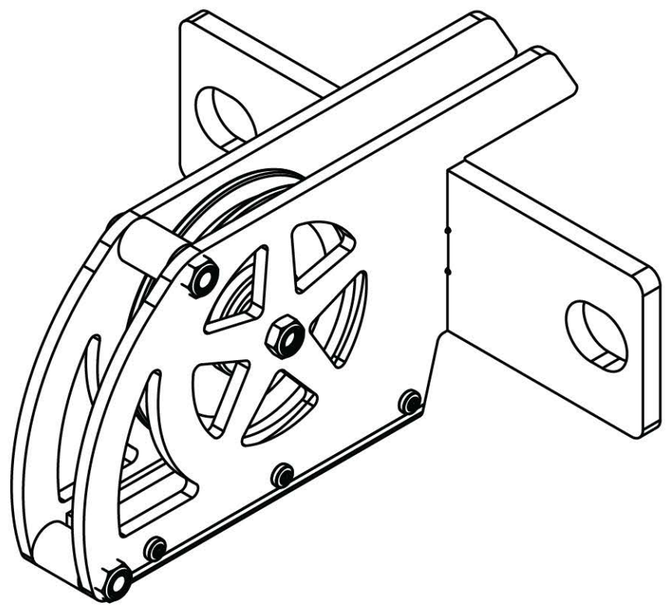

Lat Pulldown Pulley Bracket

16 Qty: **1x**

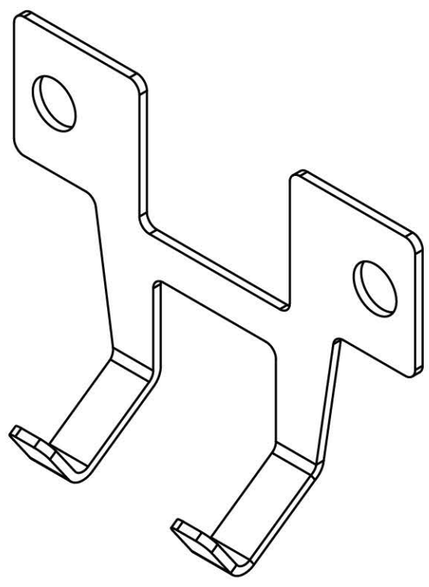

Lat Bar Hanger

17 Qty: **1x**

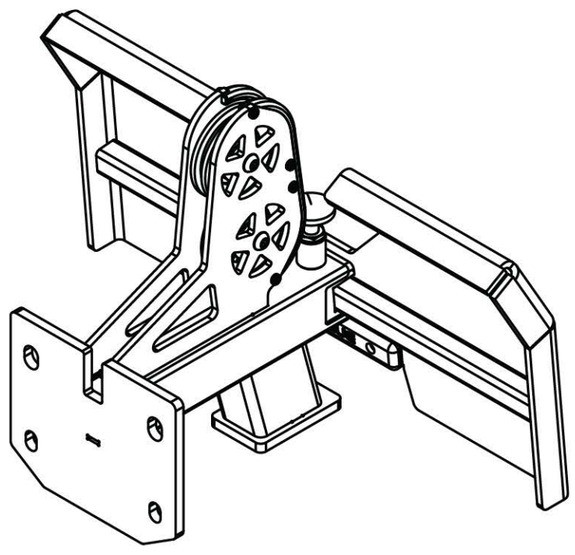

Low Row Footplate Assembly

18 Qty: **1x**

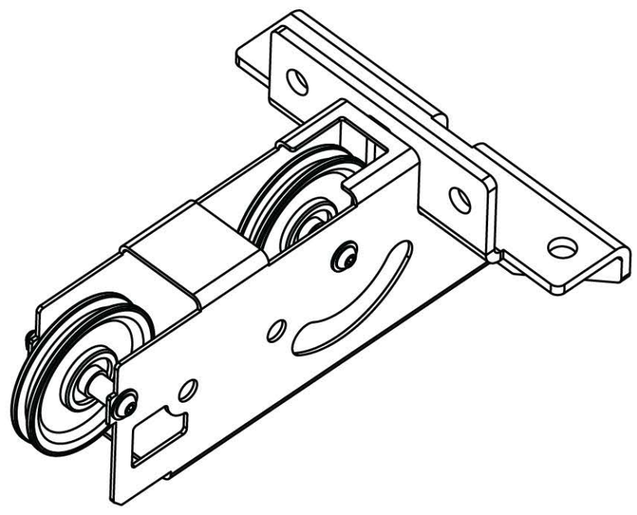

Low Rear Pulley Assembly

19 Qty: **2x**

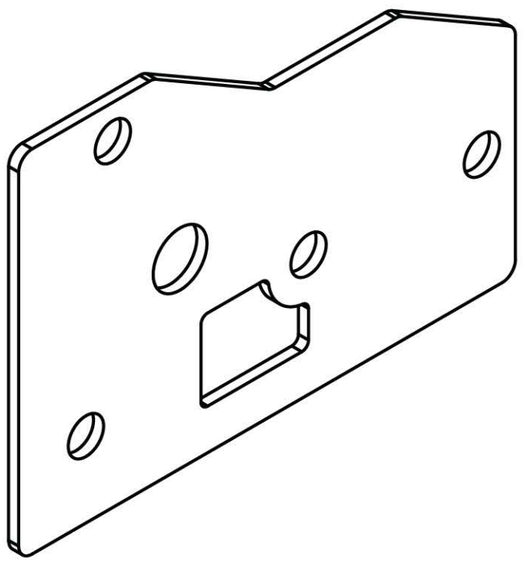

Rear Connector Plate

20 Qty: **2x**

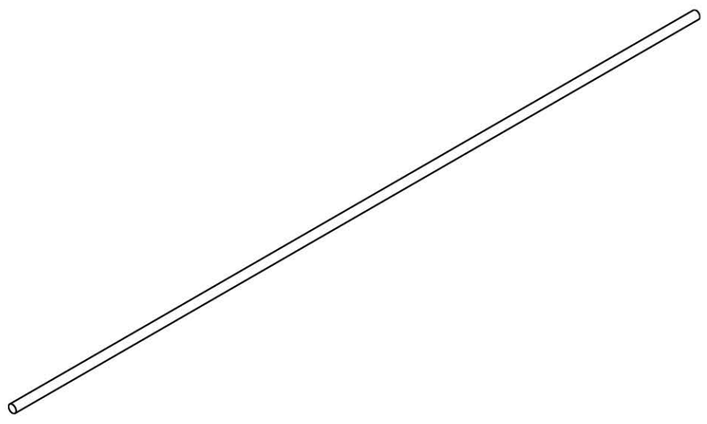

Guide Rod

21 Qty: **1x**

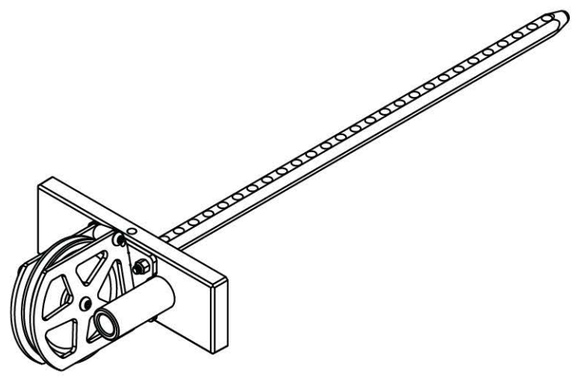

Weight Stack Stem

22 *Qty: **23x or 28x**

*

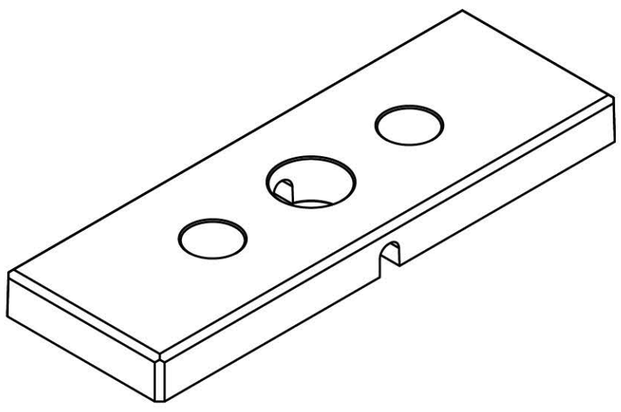

10LB Weight Stack Plate

23 Qty: **1x**

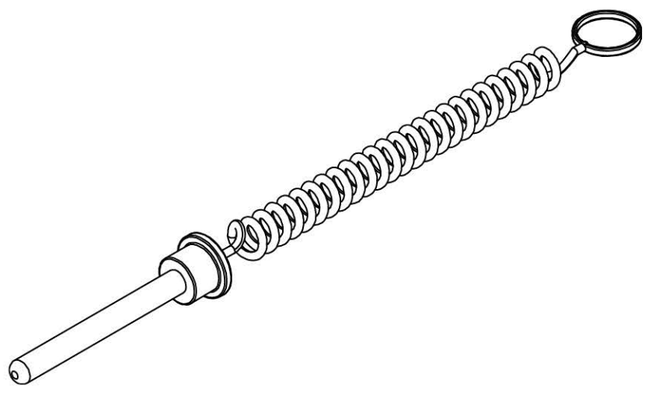

Weight Stack Selector Pin w/ Lanyard

24 Qty: **1x**

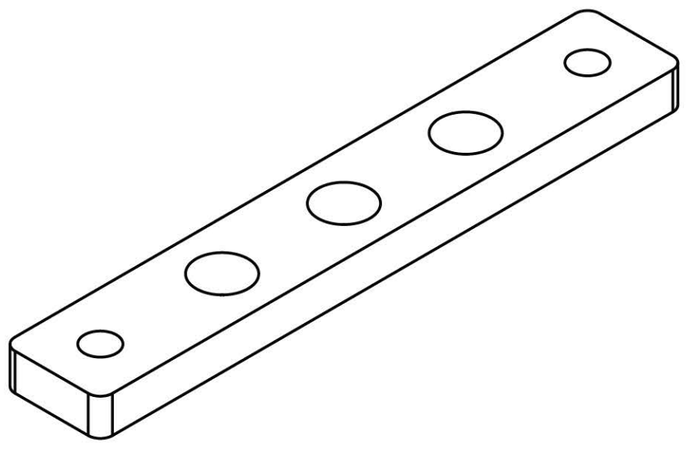

Weight Stack Spacer

* Quantity depends on 250 lb or 300 lb weight stack selected at checkout.

INCLUDED PARTS: FM-HR

Note: Images not shown at scale.

25 Qty: **1x**

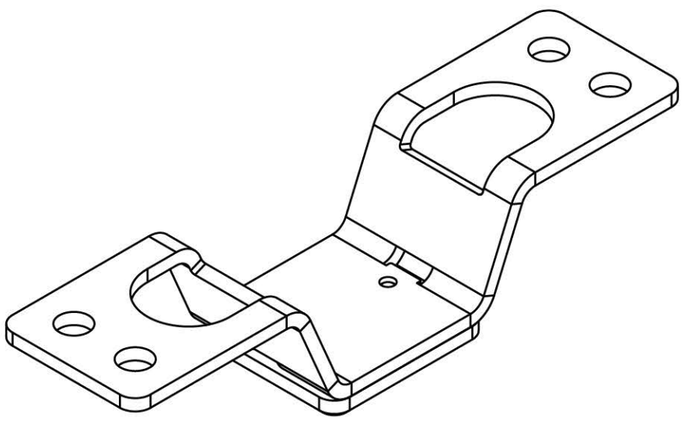

Top Weight Stack Stop Block

26 Qty: **2x**

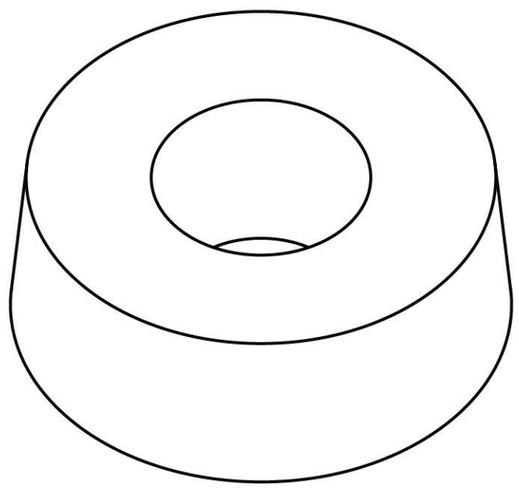

Weight Stack Bumper

27 Qty: **2x**

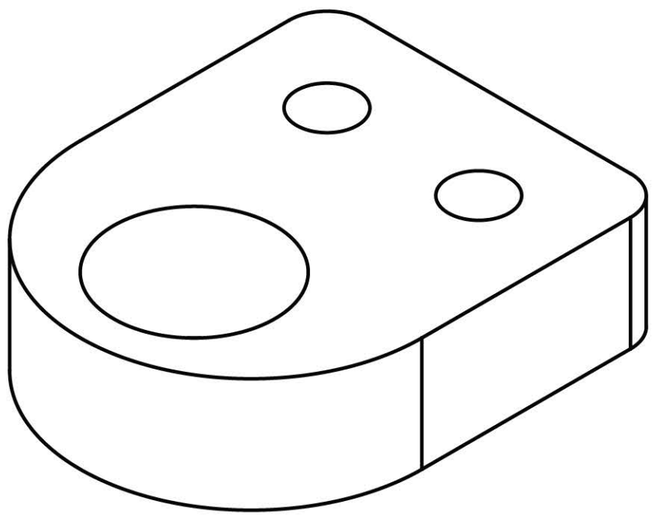

Guide Rod Spacer

28 Qty: **1x**

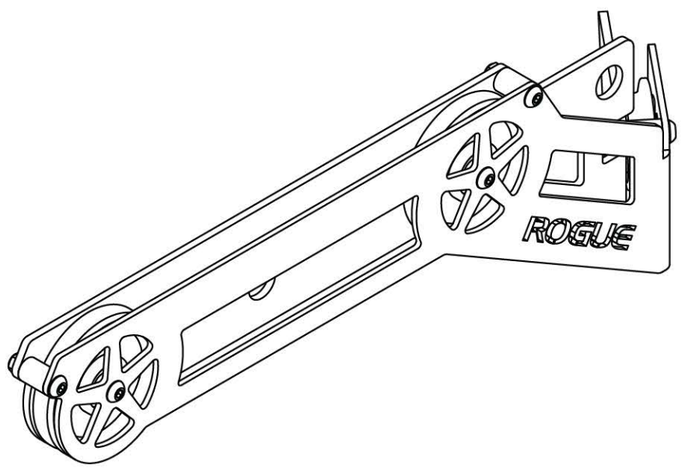

Top Side Pulley Assembly - RH

29 Qty: **1x**

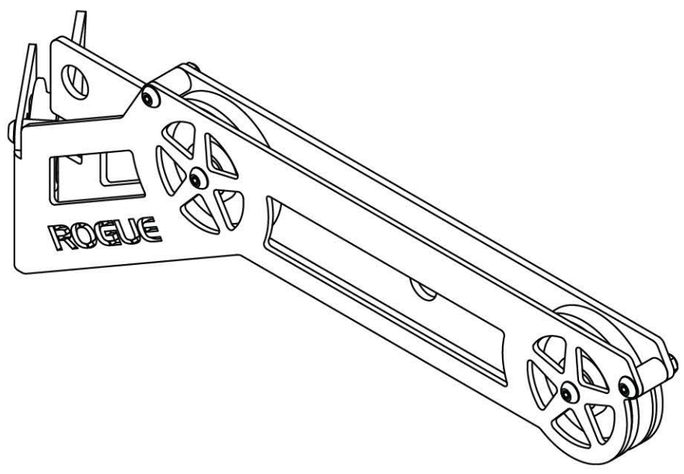

Top Side Pulley Assembly - LH

30 Qty: **1x**

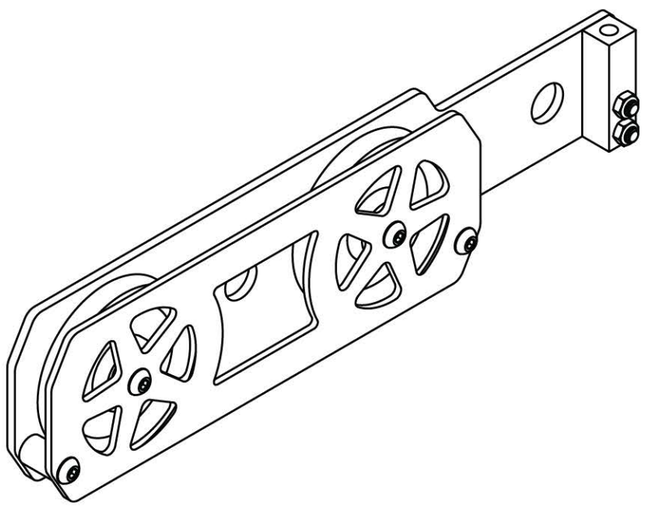

Bottom Side Pulley Assembly - RH

31 Qty: **1x**

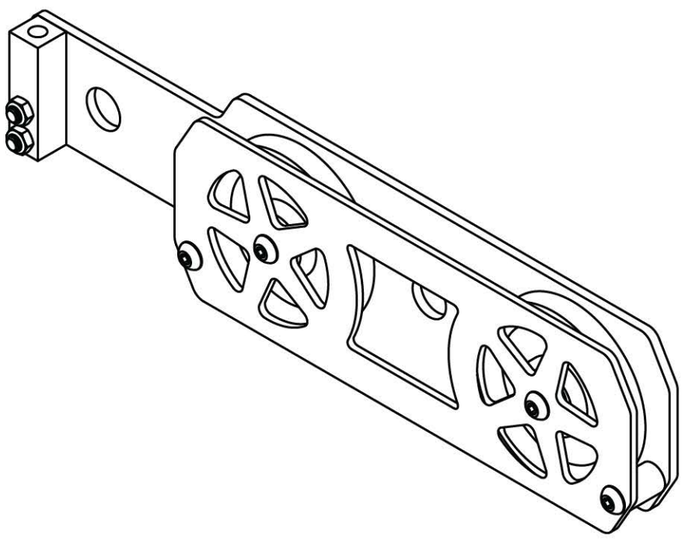

Bottom Side Pulley Assembly - LH

32 Qty: **1x**

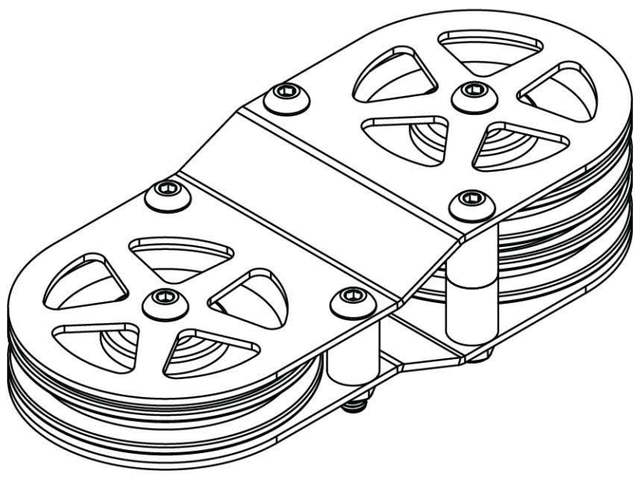

Rear Peanut Pulley

33 Qty: **2x**

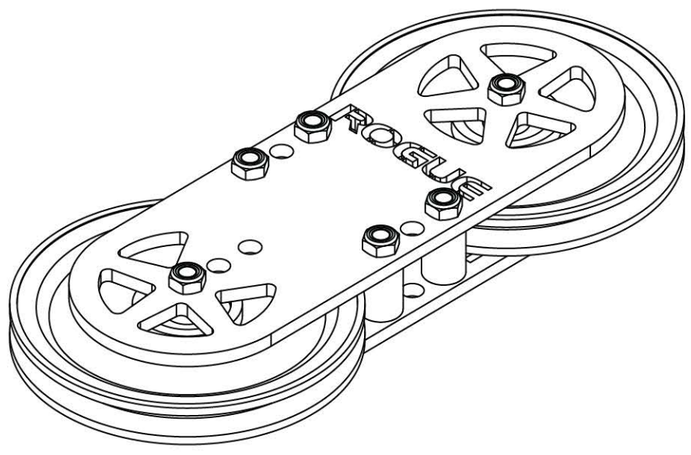

Side Peanut Pulley

34 Qty: **1x**

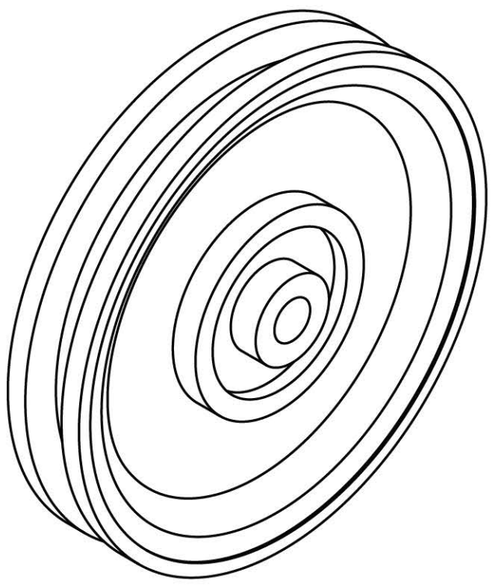

4.5” Pulley

35 Qty: **1x**

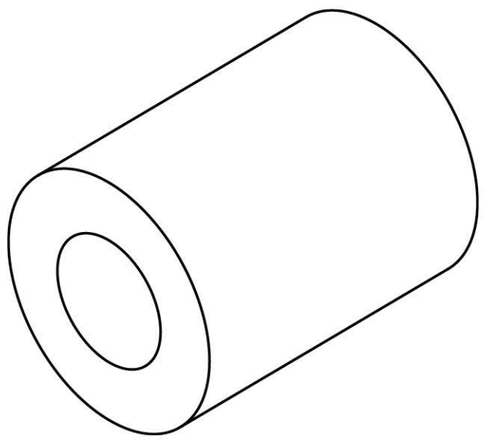

3/4” x 1” Cable Retainer

36 Qty: **1x**

10 LB. /4.50kg	85 LB. /38.6kg	20 LB. /9.10kg	170 LB. /77.3kg
15 LB. /6.80kg	90 LB. /40.9kg	30 LB. /13.6kg	180 LB. /81.8kg
20 LB. /9.10kg	95 LB. /43.1kg	40 LB. /18.2kg	190 LB. /86.4kg
25 LB. /11.3kg	100 LB. /45.5kg	50 LB. /22.7kg	200 LB. /90.9kg
30 LB. /13.6kg	105 LB. /47.6kg	60 LB. /27.2kg	210 LB. /95.5kg
35 LB. /15.9kg	110 LB. /50.5kg	70 LB. /31.8kg	220 LB. /100kg
40 LB. /18.2kg	115 LB. /52.2kg	80 LB. /36.4kg	230 LB. /104.5kg
45 LB. /20.4kg	120 LB. /54.5kg	90 LB. /40.9kg	240 LB. /109.1kg
50 LB. /22.7kg	125 LB. /56.7kg	100 LB. /45.5kg	250 LB. /113.6kg
55 LB. /24.9kg	130 LB. /59.1kg	110 LB. /50.5kg	260 LB. /118.2kg
60 LB. /27.2kg	135 LB. /61.2kg	120 LB. /54.5kg	270 LB. /122.7kg
65 LB. /29.5kg	140 LB. /63.6kg	130 LB. /59.1kg	280 LB. /127.3kg
70 LB. /31.8kg	145 LB. /65.8kg	140 LB. /63.6kg	290 LB. /131.8kg
75 LB. /34.0kg	150 LB. /68.2kg	150 LB. /68.2kg	300 LB. /136.4kg
80 LB. /36.4kg		160 LB. /72.7kg	

Weight Stack Number Label Sheet

INCLUDED PARTS: FM-HR

Note: Images not shown at scale.

37 Qty: **1x**

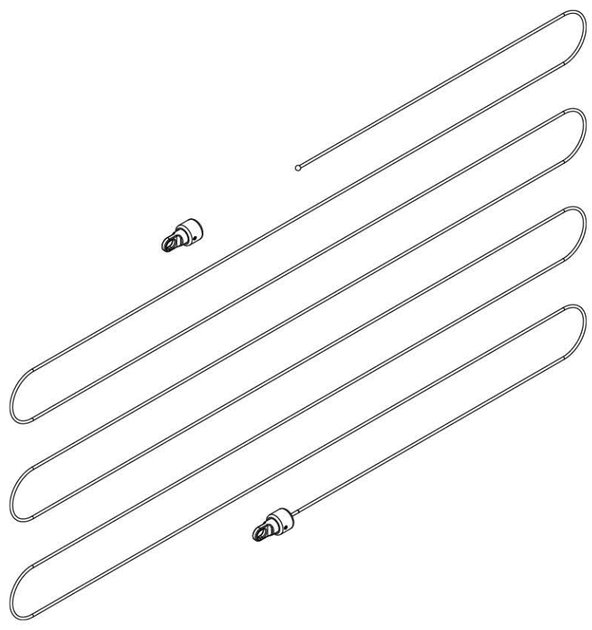

Trolley/Trolley Cable (Blue Tag)

38 Qty: **1x**

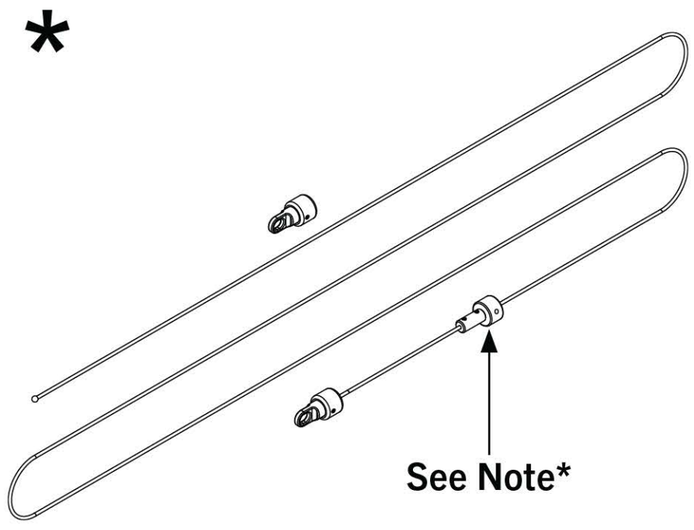

Lat Pull/Low Row Cable (Yellow Tag)

39 Qty: **2x**

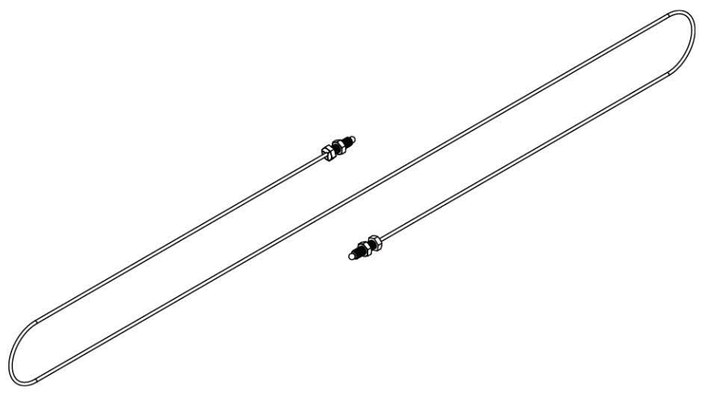

Low Side Cable (Red Tag)

40 Qty: **8x**

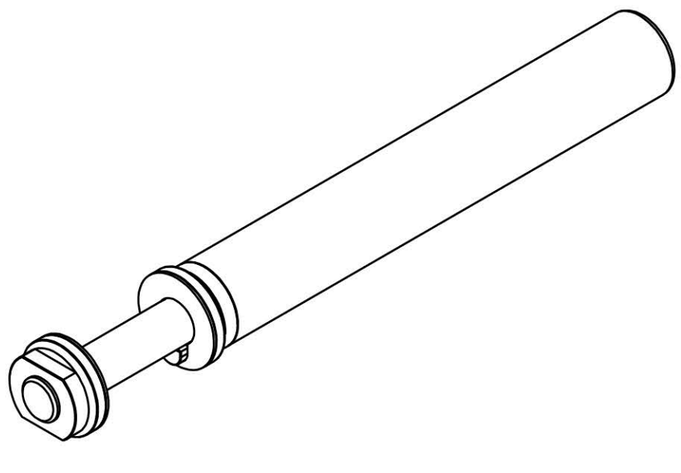

Monster Plate Storage Pin

41 Qty: **8x**

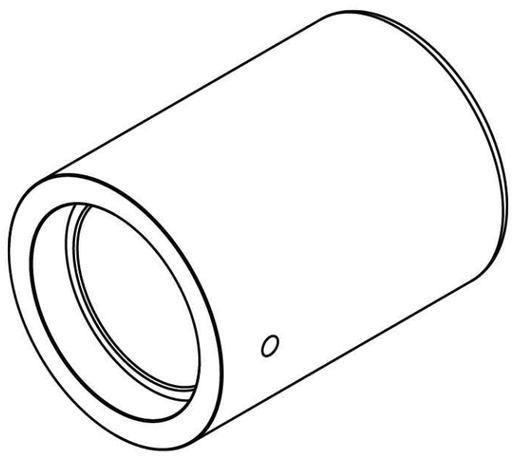

Plate Storage Spacer

42 Qty: **1x**

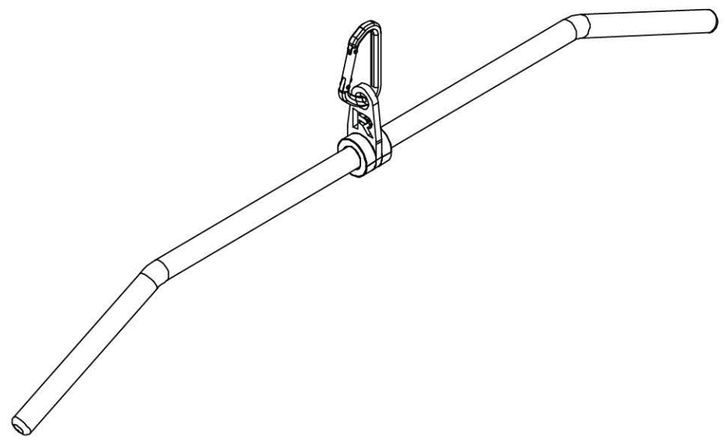

Stainless Lat Bar

43 Qty: **1x**

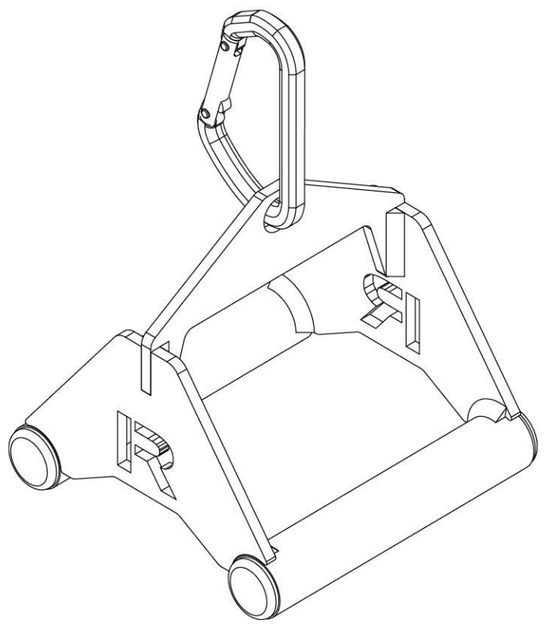

Standard Grip Triangle

44 Qty: **2x**

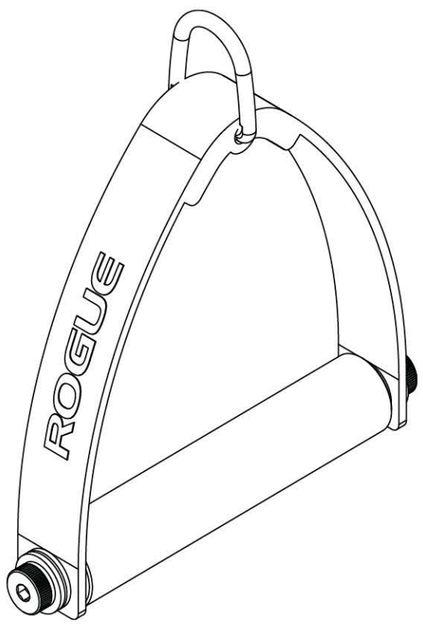

Single Handle Cable Attachment

45 Qty: **1x**

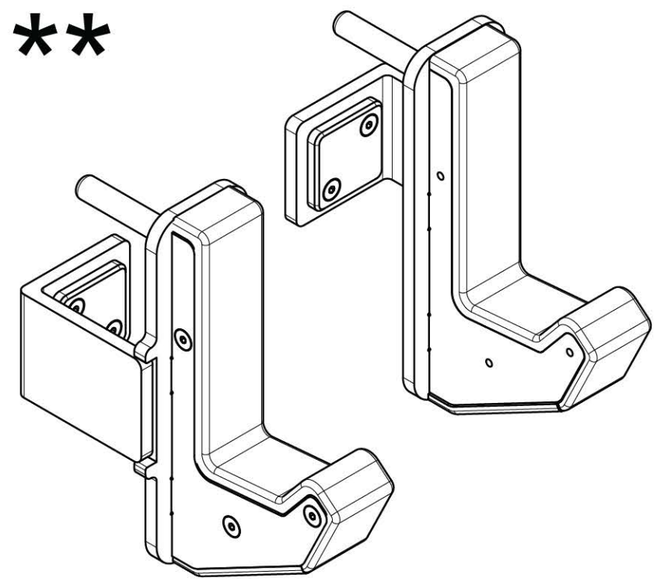

Pair of Monster J-cups

46 Qty: **2x**

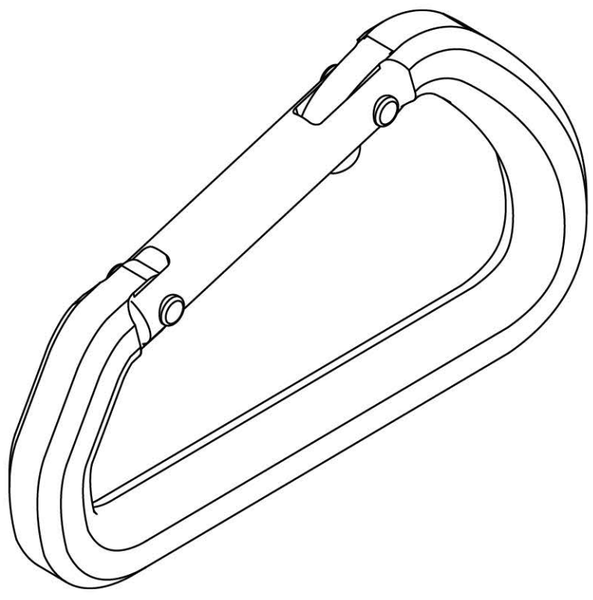

D Carabiner

47 Qty: **2x**

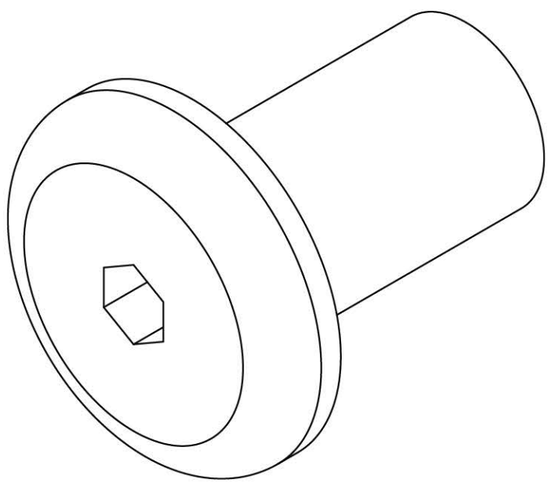

1” Shoulder Bolt - Female

48 Qty: **2x**

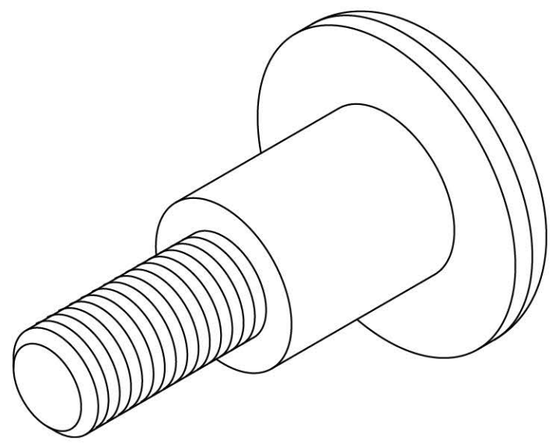

1” Shoulder Bolt - Male

* Extra “retainer” hardware shown is not included on Lat Pull/Low Row Cable for 90” Racks.
** Items may look different than drawings shown. Style depends on selection made at checkout.

INCLUDED PARTS: FM-HR

Note: Images not shown at scale.

49 Qty: **12x**

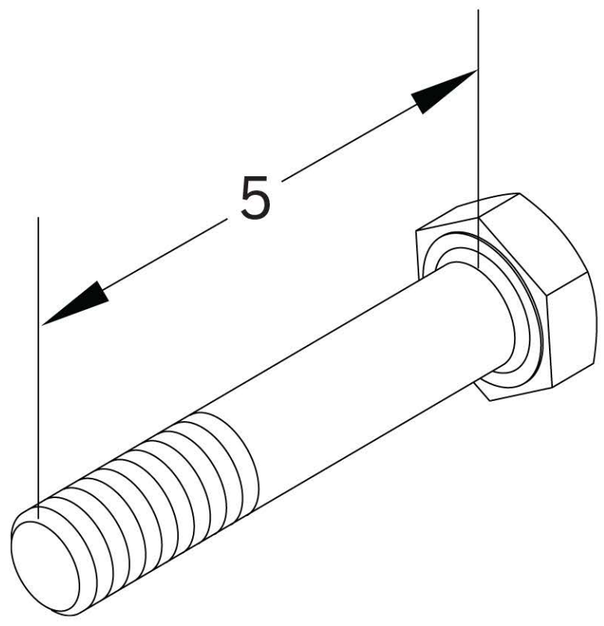

1” x 5” Hex Bolt

50 Qty: **18x**

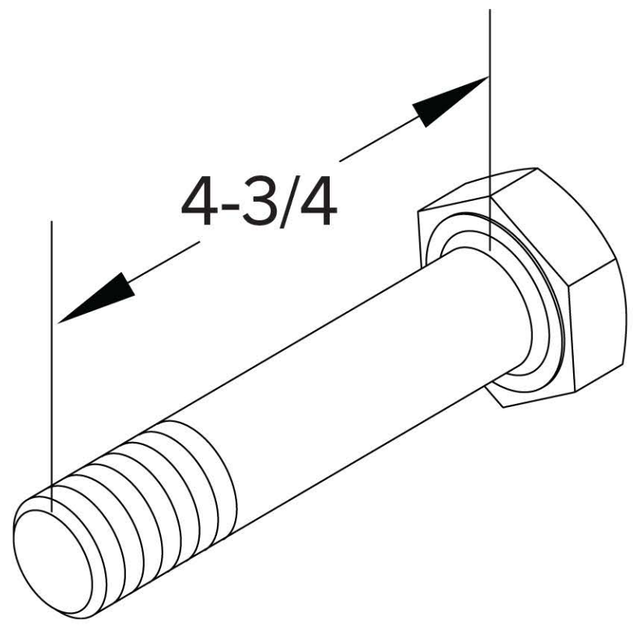

1” x 4-3/4” Hex Bolt

51 Qty: **8x**

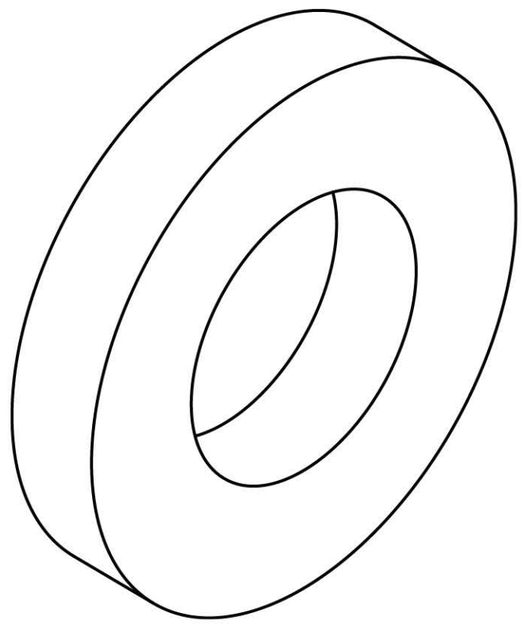

1” x 3/8” Pulley Bracket Spacer

52 Qty: **26x**

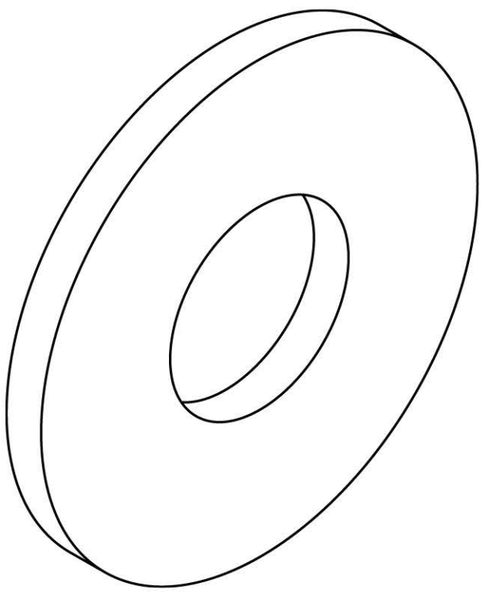

1” Flat Washer

53 Qty: **30x**

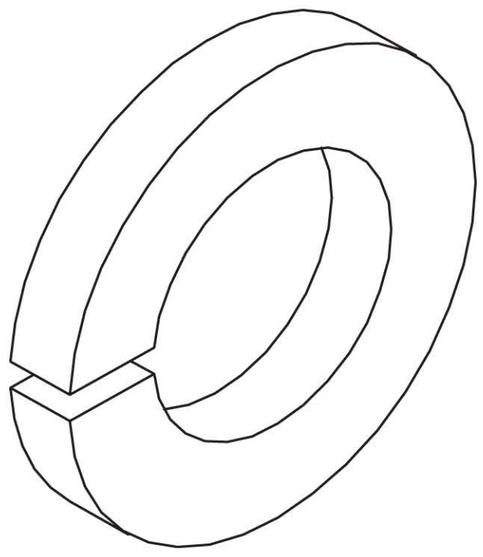

1” Lock Washer

54 Qty: **30x**

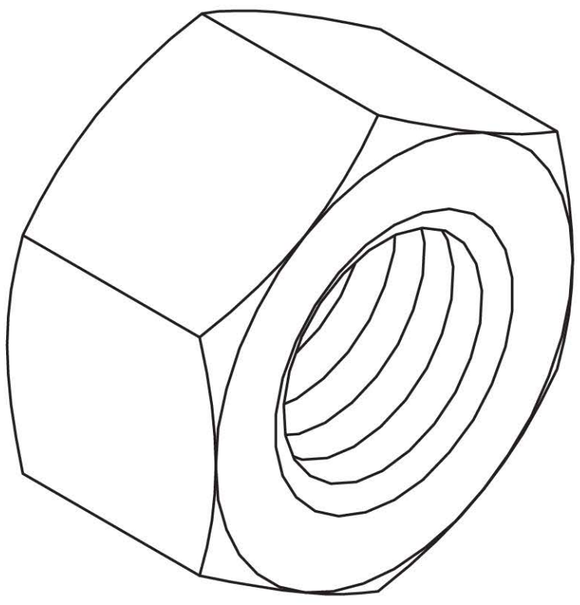

1” Hex Nut

55 Qty: **2x**

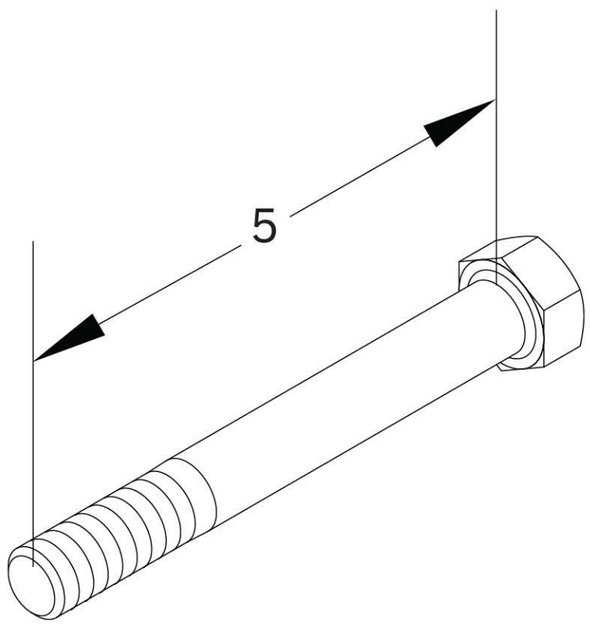

5/8” x 5” Hex Bolt

56 Qty: **11x**

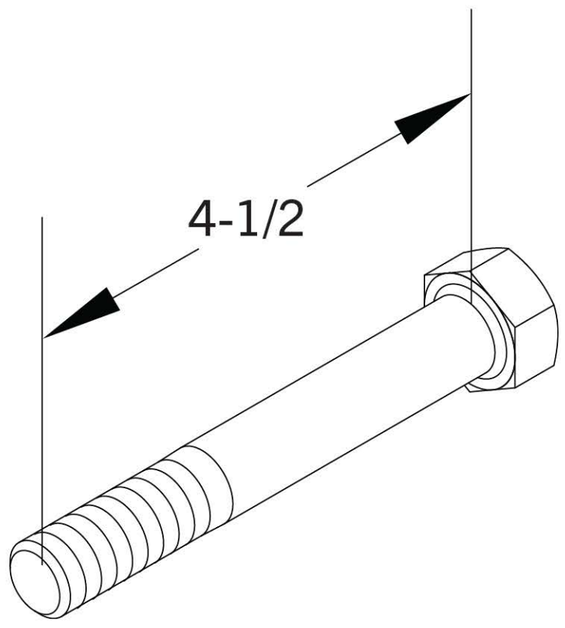

5/8” x 4-1/2” Hex Bolt

57 Qty: **13x**

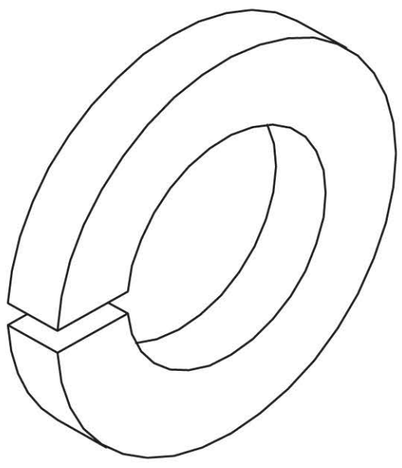

5/8” Lock Washer

58 Qty: **13x**

5/8” Hex Nut

59 Qty: **2x**

1/2” x 1-1/2” Button Head Screw

60 Qty: **2x**

1/2” Lock Washer

INCLUDED PARTS: FM-HR

Note: Images not shown at scale.

61 Qty: **2x**

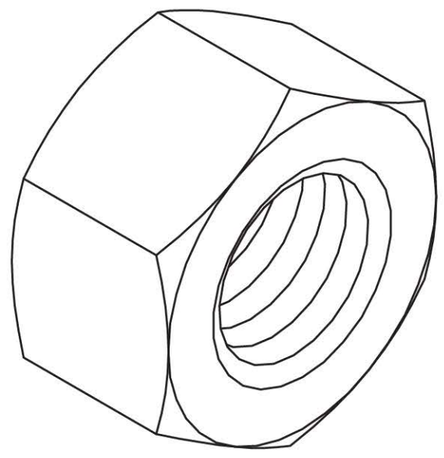

1/2” Hex Nut

62 Qty: **2x**

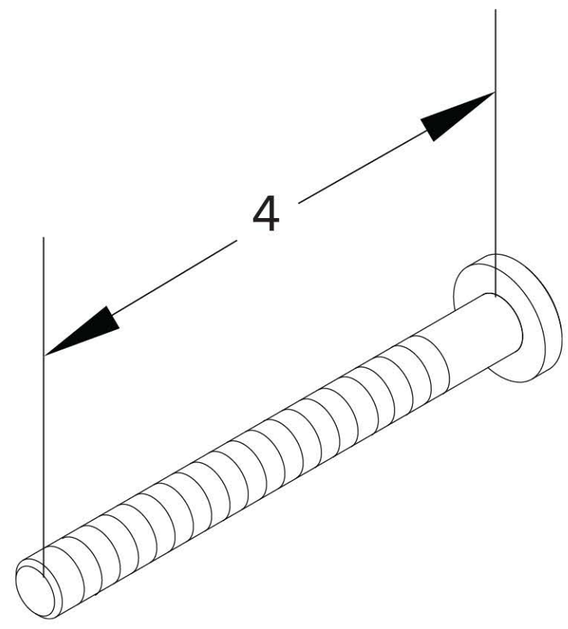

3/8” x 4” Button Head Screw

63 Qty: **4x**

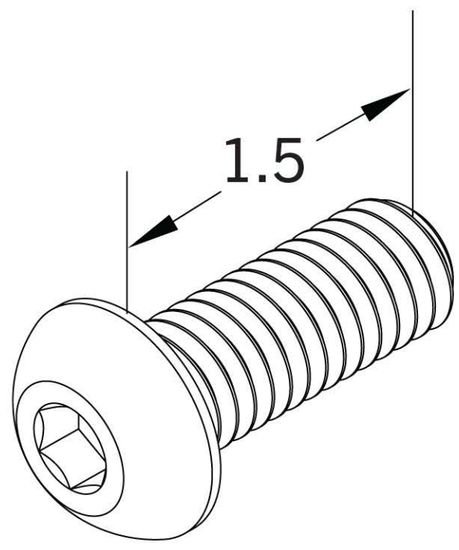

3/8” x 1.5” Button Head Screw

64 Qty: **6x**

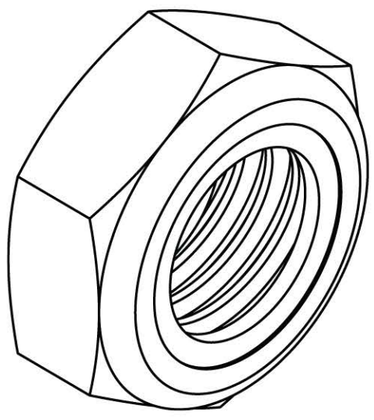

3/8” Thin Nylock Nut

65 Qty: **2x**

*

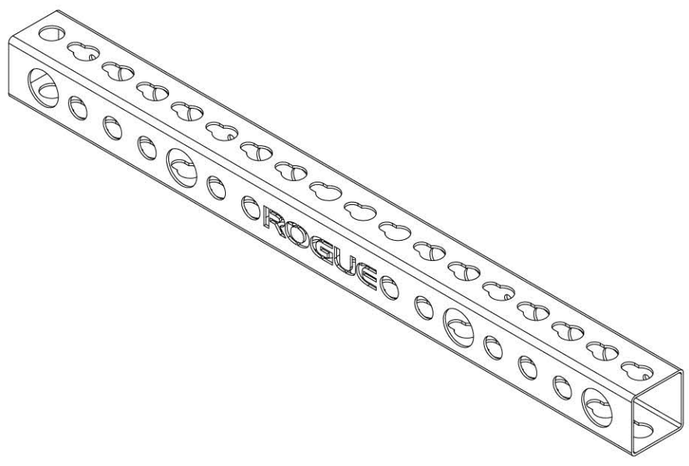

Monster Strip

* Complimentary Monster Strips included with hardware kits. See page 49 for Monster Strip assembly.

INCLUDED PARTS: SHROUD KIT

Note: Images not shown at scale.

66 Qty: **1x**

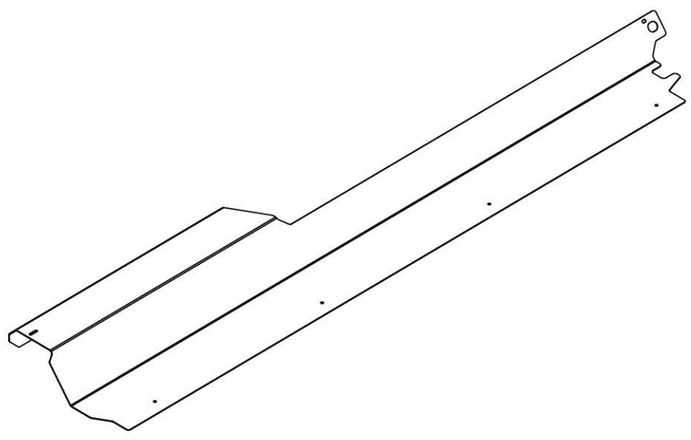

Weight Stack Shroud - RH

67 Qty: **1x**

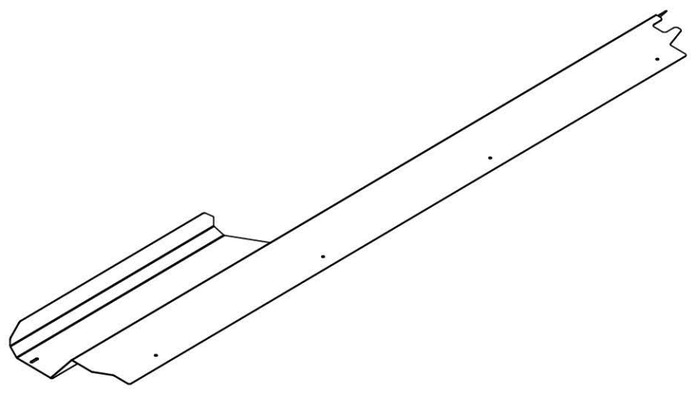

Weight Stack Shroud - LH

68 Qty: **1x**

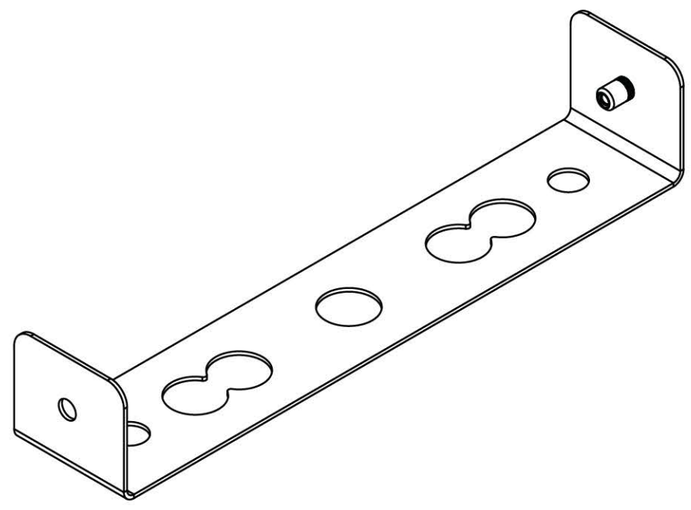

Weight Stack Shroud Bottom Bracket

69 Qty: **1x**

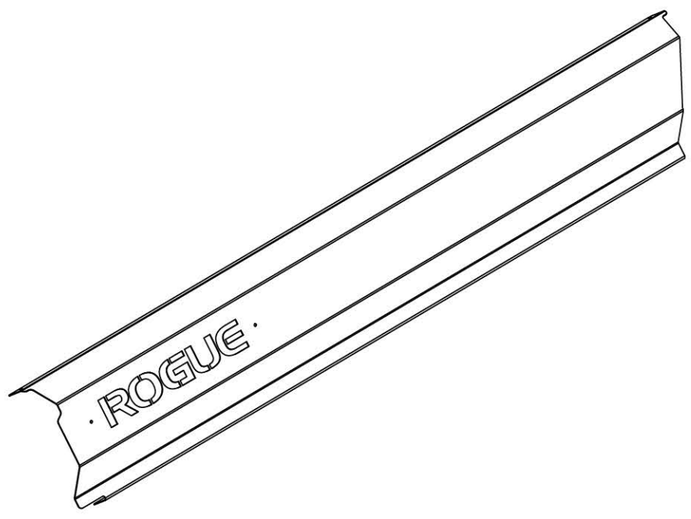

Side Shroud - RH

70 Qty: **1x**

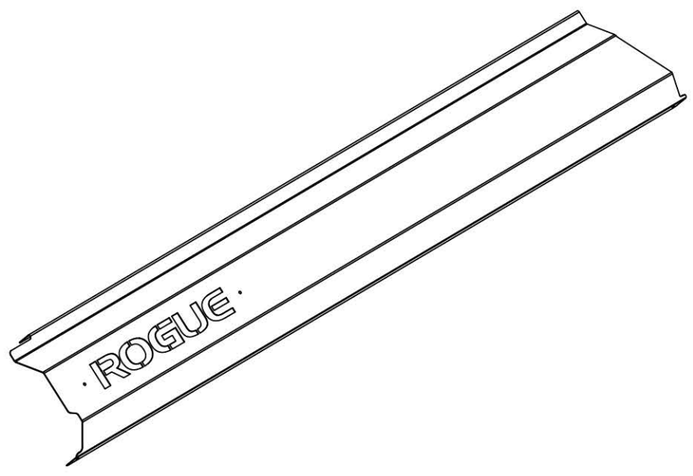

Side Shroud - LH

71 Qty: **1x**

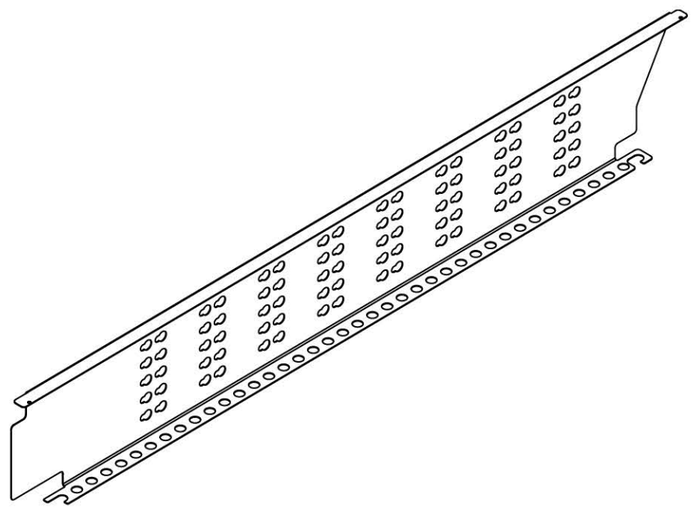

Storage Panel - RH

72 Qty: **1x**

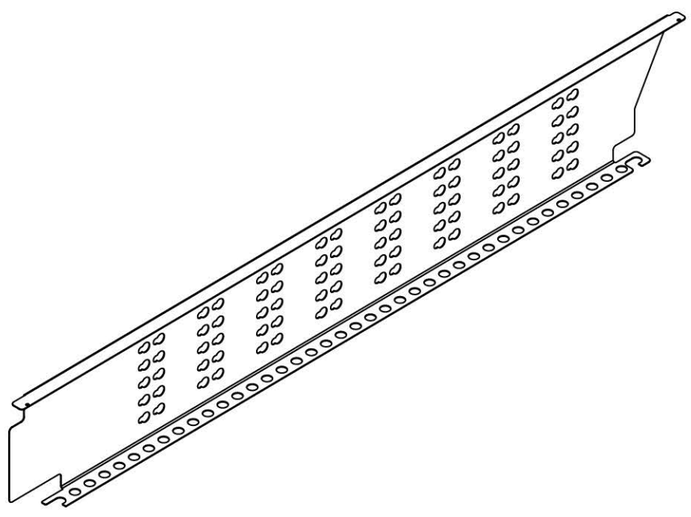

Storage Panel - LH

73 Qty: **2x**

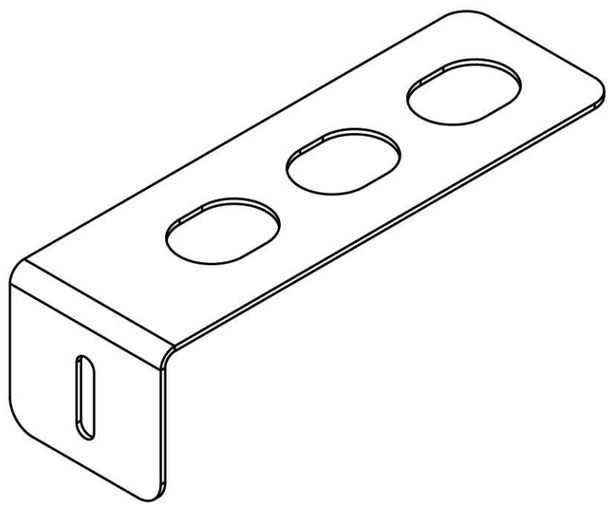

Side Shroud Top Bracket

74 Qty: **2x**

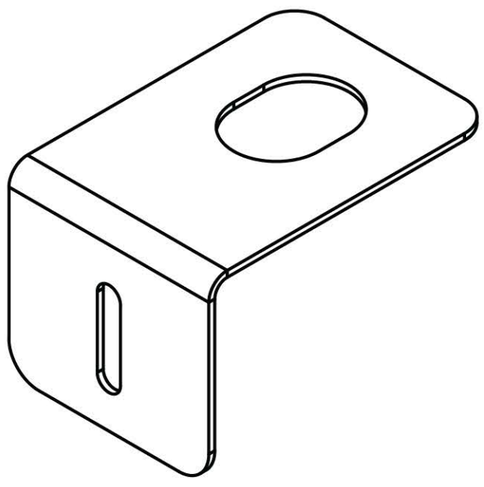

Side Shroud Bottom Bracket

75 Qty: **6x**

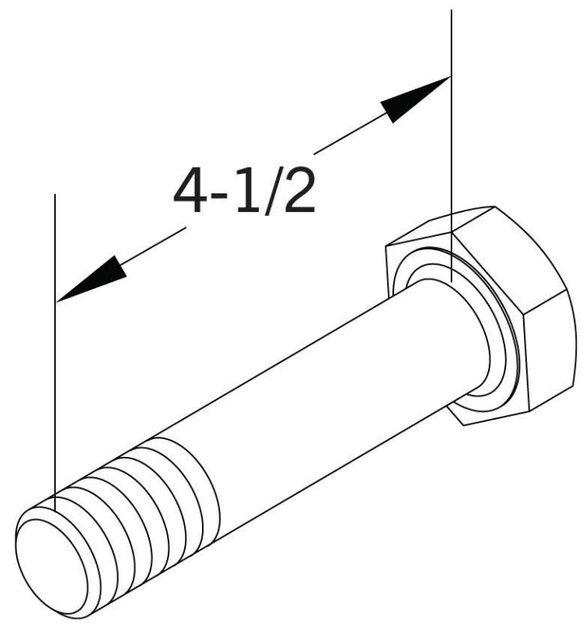

1” x 4-3/4” Hex Bolt

76 Qty: **6x**

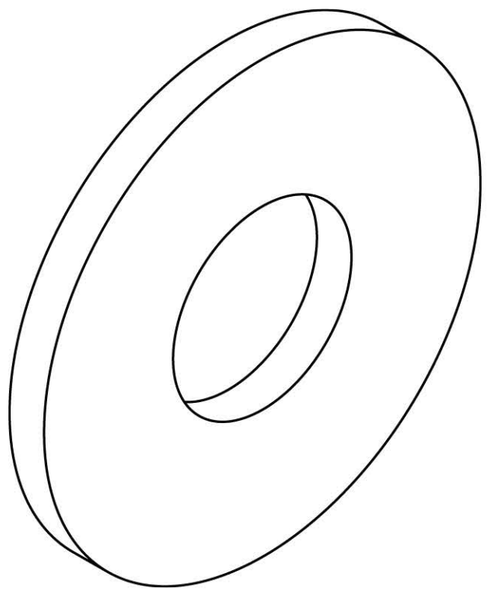

1” Flat Washer

77 Qty: **6x**

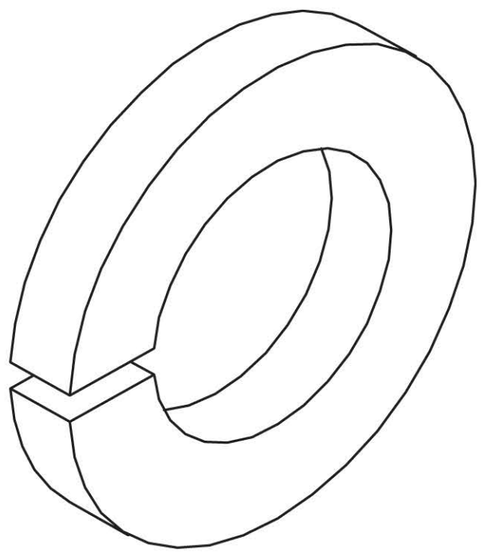

1” Lock Washer

INCLUDED PARTS: SHROUD KIT

Note: Images not shown at scale.

78 Qty: **6x**

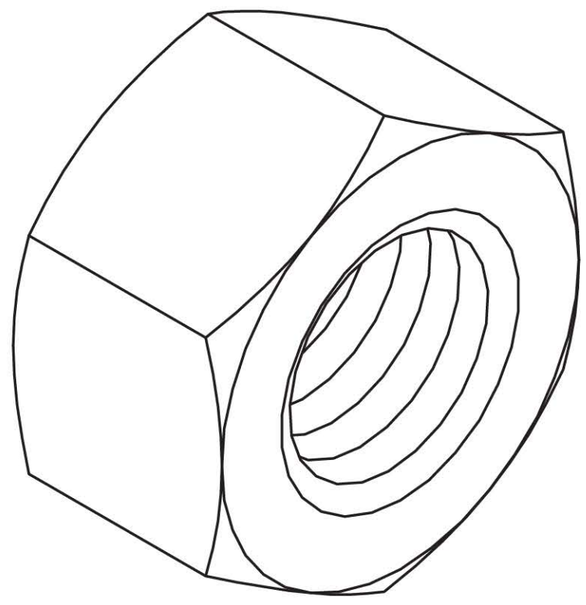

1” Hex Nut

79 Qty: **6x**

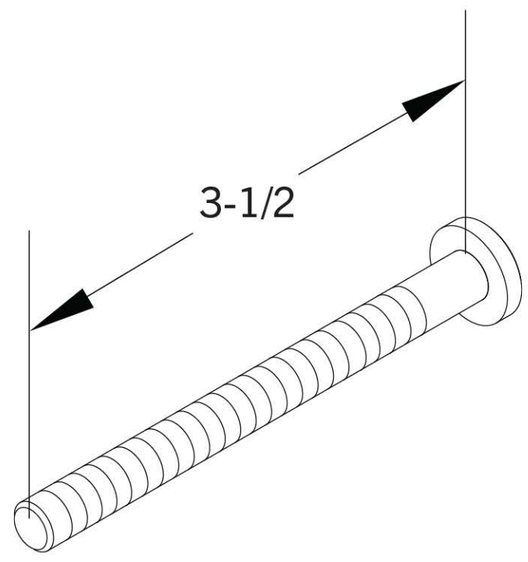

1/4” x 3-1/2” Button Head Screw

80 Qty: **6x**

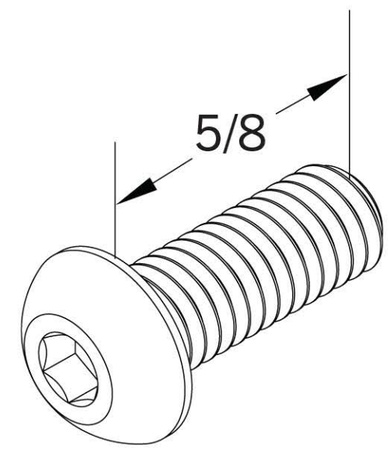

1/4” x 5/8” Button Head Screw

81 Qty: **6x**

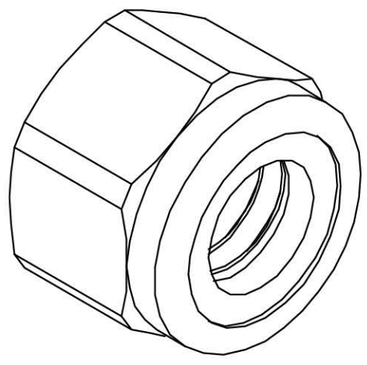

1/4” Nylock Nut

82 Qty: **4x**

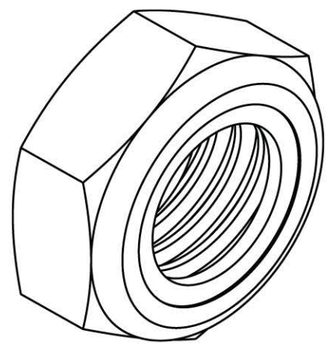

1/4” Thin Nylock Nut

83 Qty: **4x**

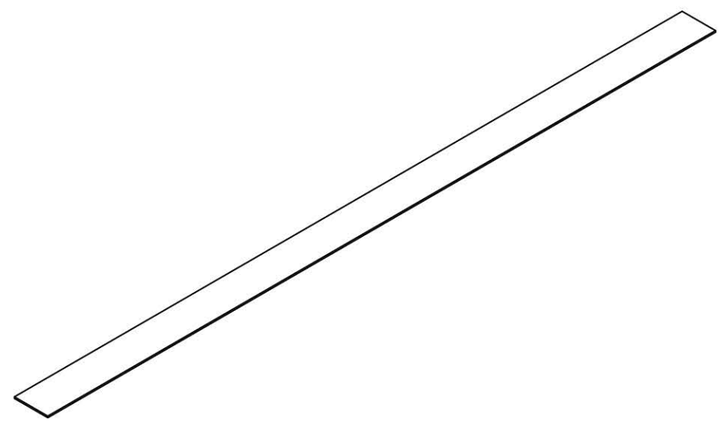

3” Foam Panel

84 Qty: **2x**

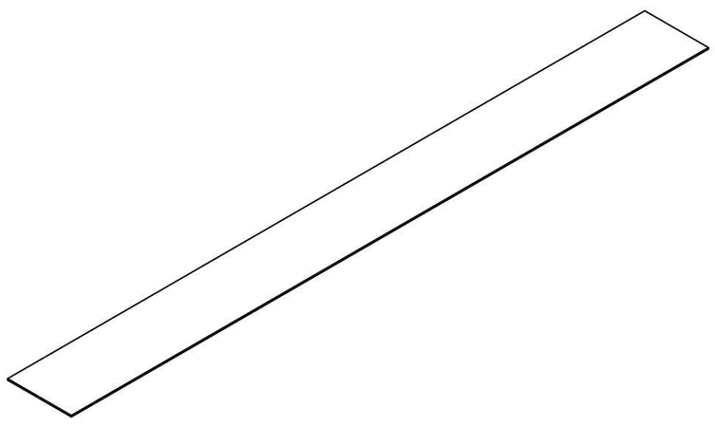

6” Foam Panel

1” HARDWARE LENGTH GUIDE

Note:

- 1” x 5” [**49**] and 1” x 4-3/4” [**50**] Bolts shown to scale below to help differientate variations in length.

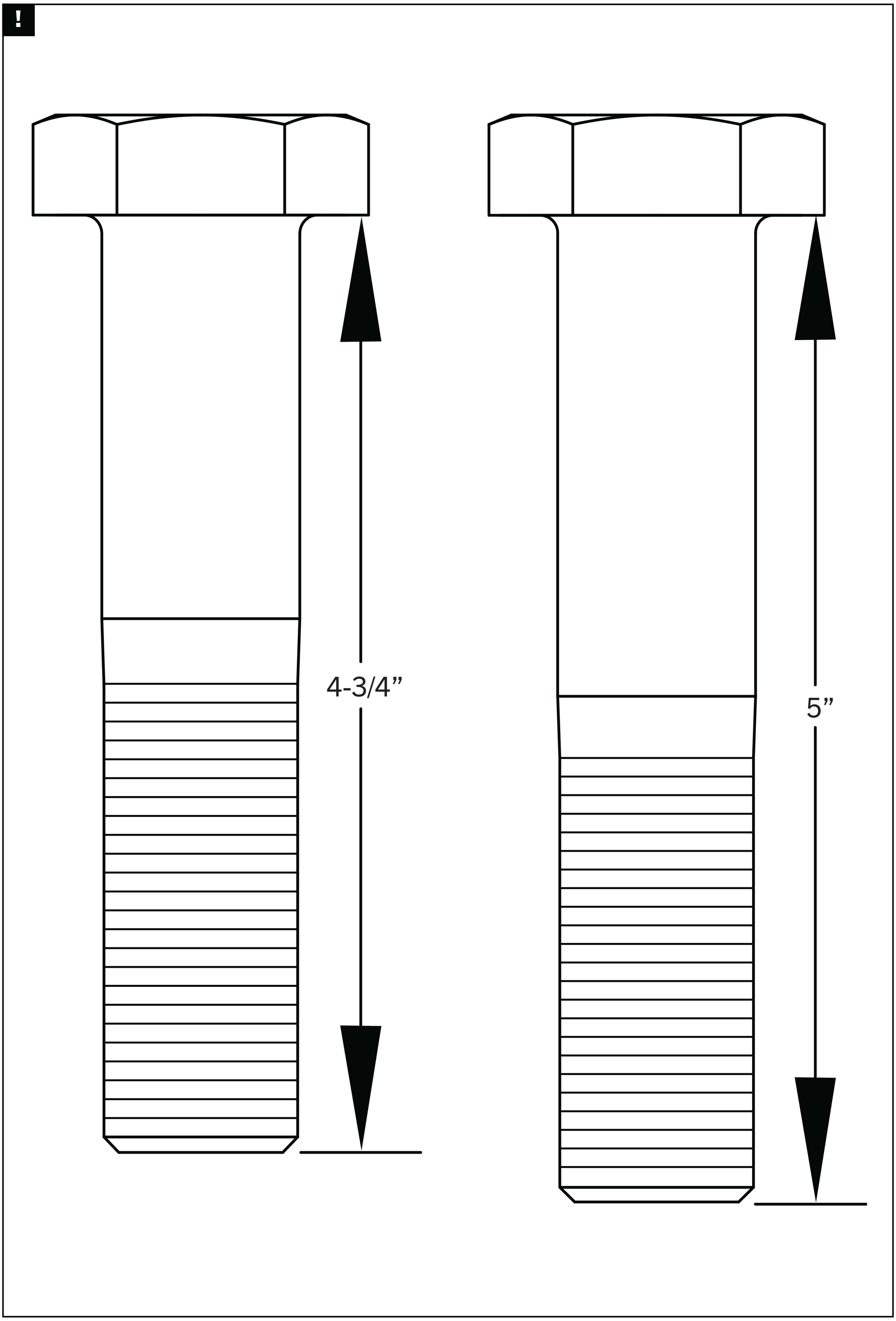

STEP 1

IMPORTANT:

- **DO NOT USE TOOLS TO TIGHTEN THROUGHOUT ASSEMBLY UNLESS OTHERWISE SPECIFIED.**
- While pulling the handle triggers, slide Swivel Trolley RH [**7**] and Swivel Trolley LH [**8**] onto two Monster Uprights [**1**].
- Note the orientation of Swivel Trolleys in relation to the feet at bottom of uprights.
- Slide Trolleys about halfway down Upright and release triggers to lock pop pins in place when the viewing window is showing the number 23.

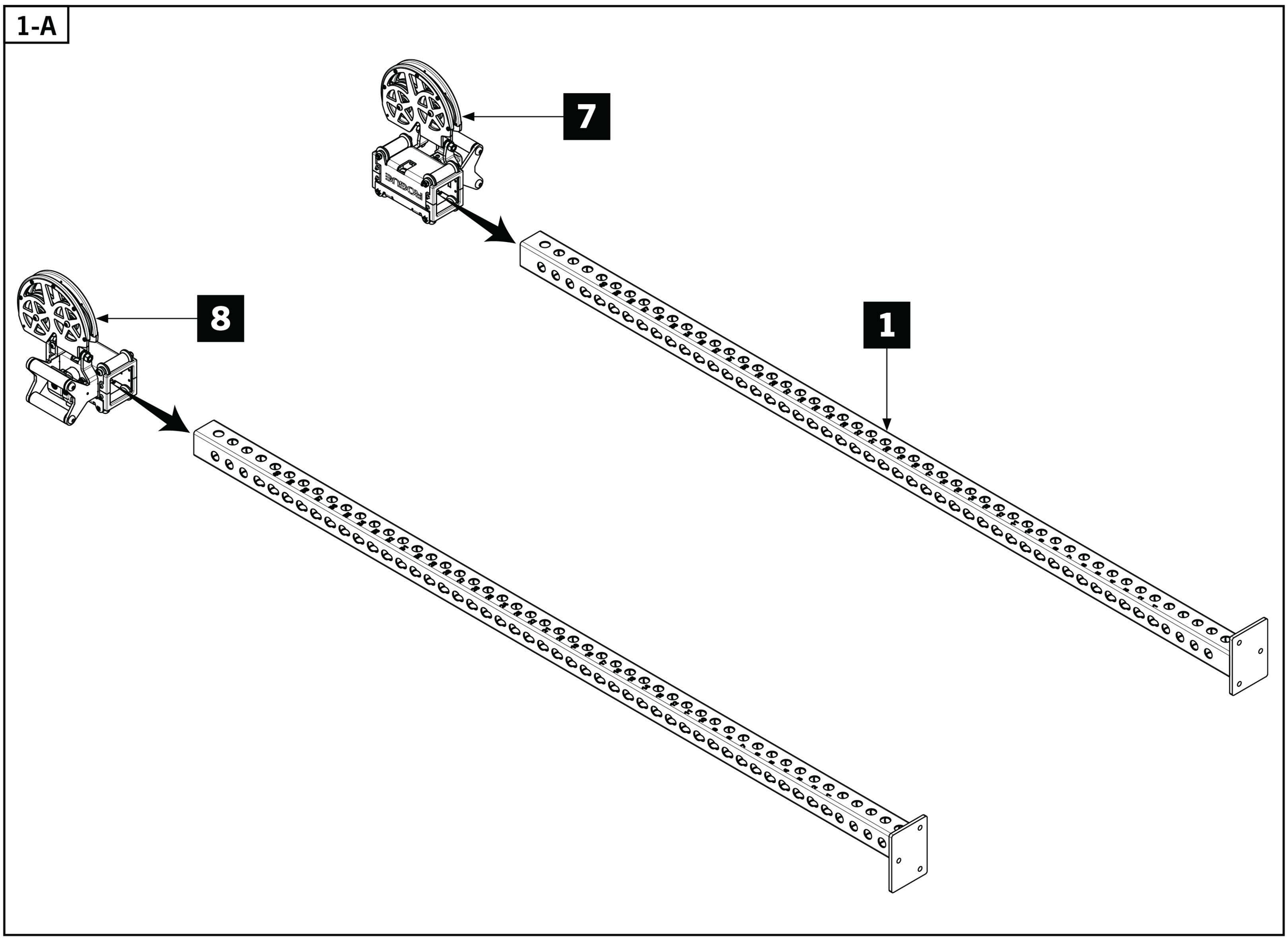

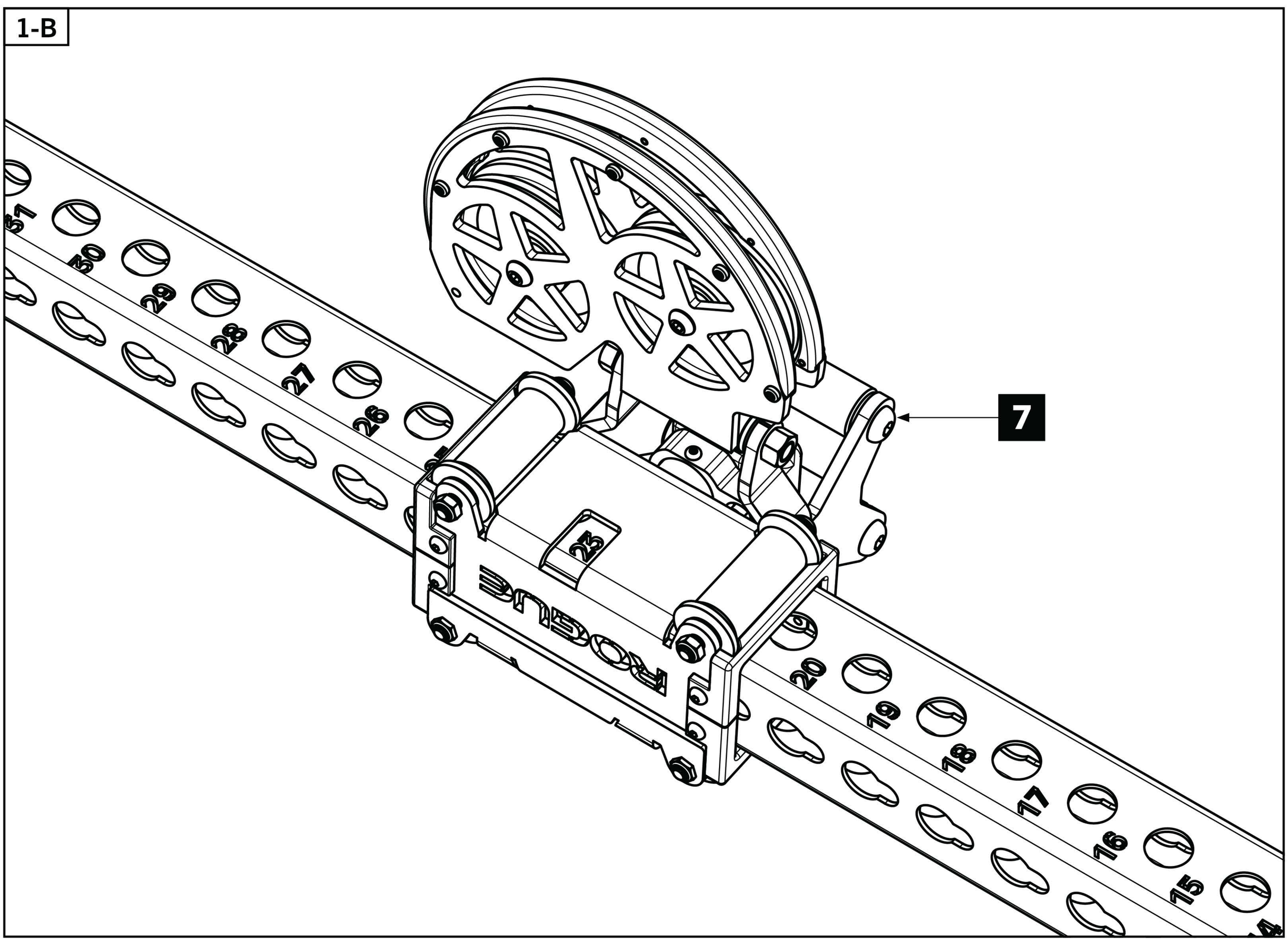

STEP 2

- Refer to overview image to plan assembly and ensure ample floor space is alloted.
- Lay down all parts on a non-abrasive surface in the orientation shown below.
- Position the footplates of uprights approximately 55” apart.
- Note orientation of Swivel Trolleys and Upright feet in relation to the ground.
- Connect Uprights to Crossmembers using 1” x 4-3/4” Hex Bolts [**50**], 1” Flat Washers [**52**], 1” Lock Washers [**53**], and 1” Hex Nuts [**54**].
- If Half Rack Feet [**9**] were purchased, install them in place of Flat Washers on bottom of Uprights as shown in Detail views.
- HAND-TIGHTEN ONLY

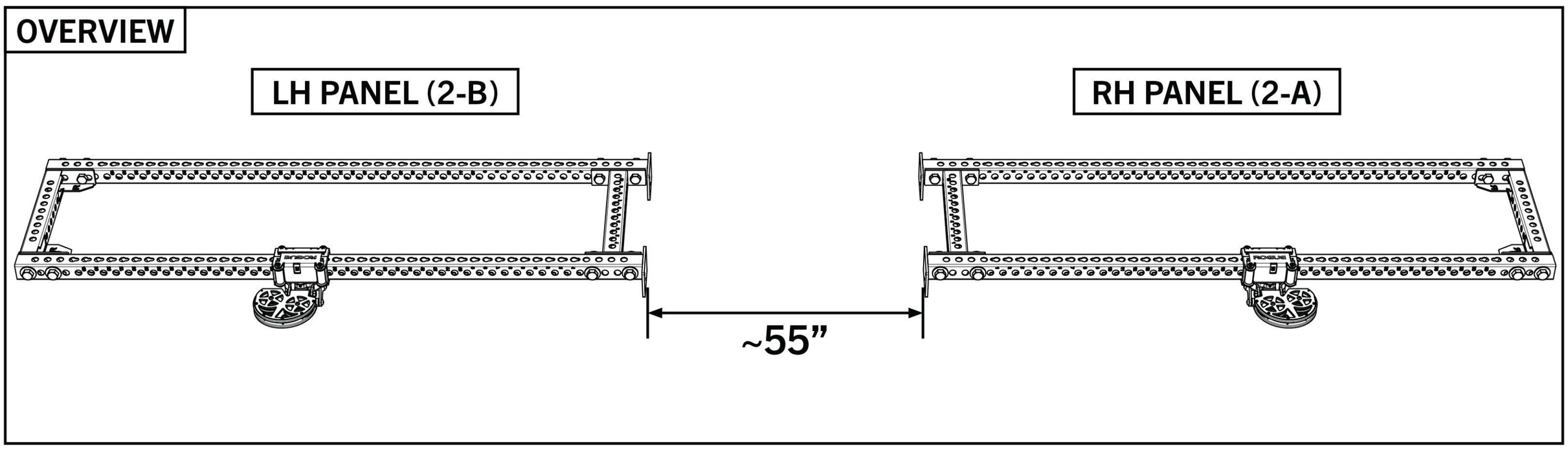

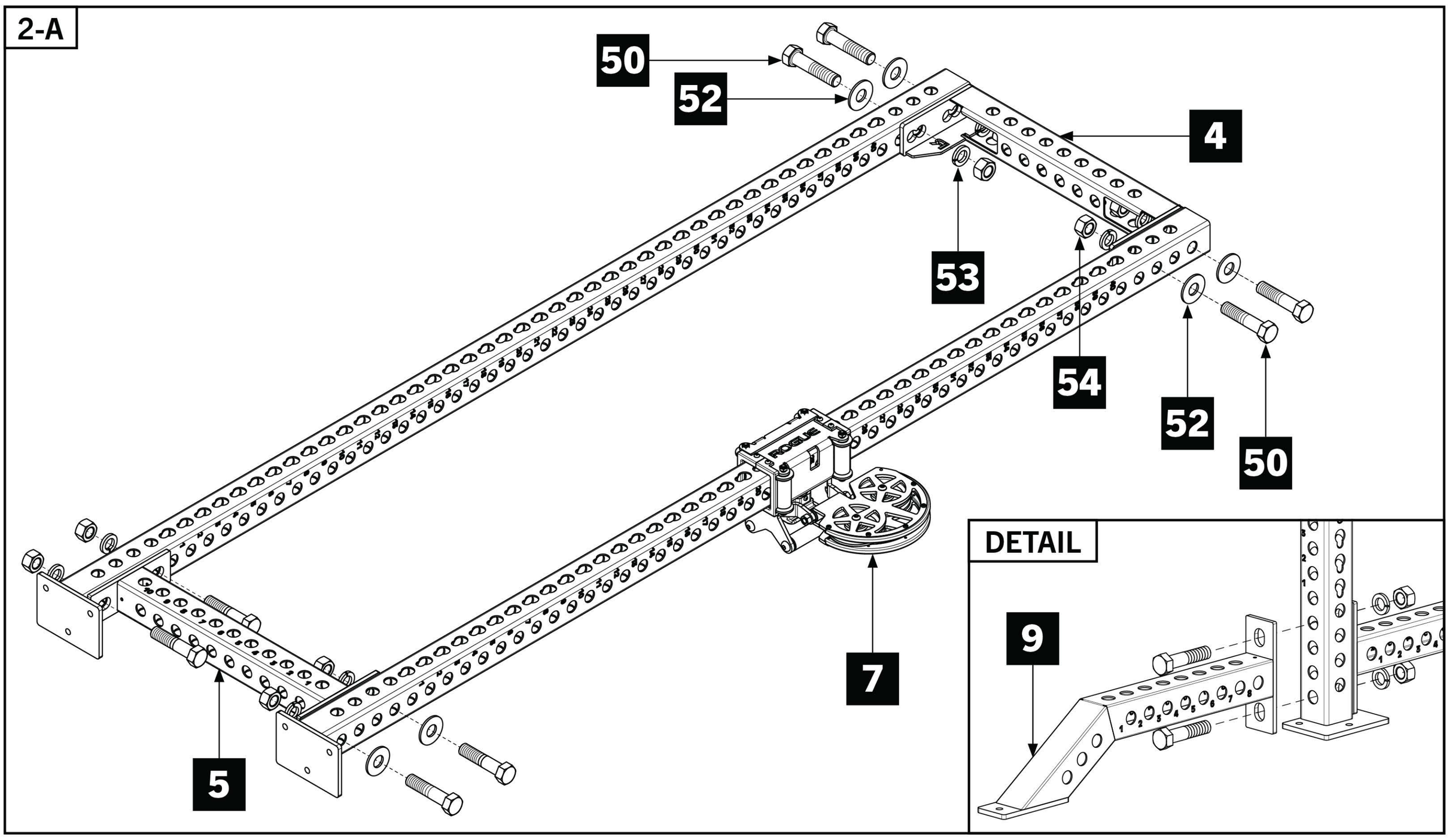

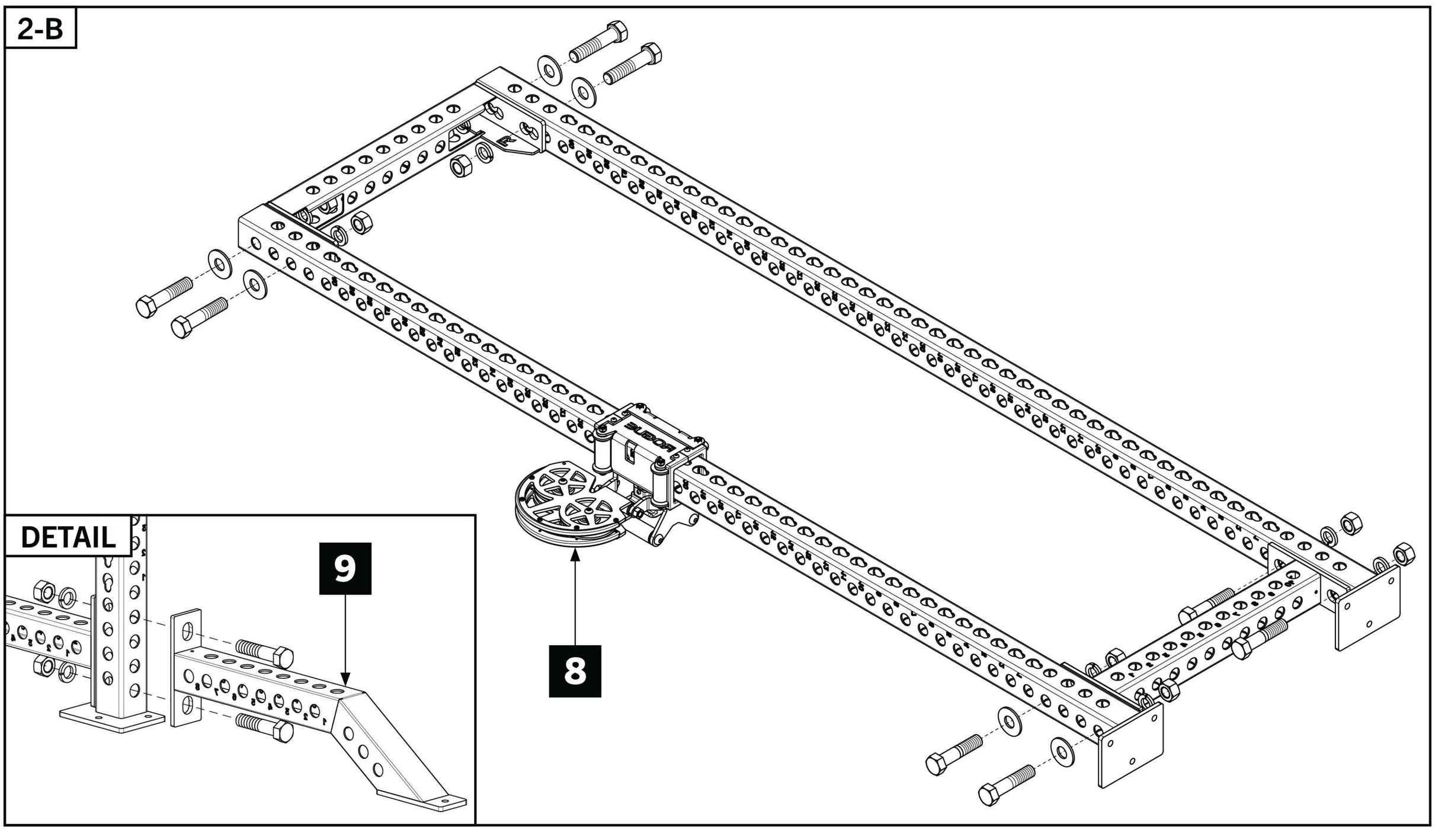

STEP 3

IMPORTANT:

- For safety, we recommend the remainder of these instructions be completed by **2 or 3 people**.
- Have two people stand one assembled panel up first.
- One person stabilizes the first panel while the other stands up the second panel.
- One or two people should stabilize both panels, ensuring panels don't fall while another person assembles the spanning Crossmember in **STEP 4**.

OVERVIEW

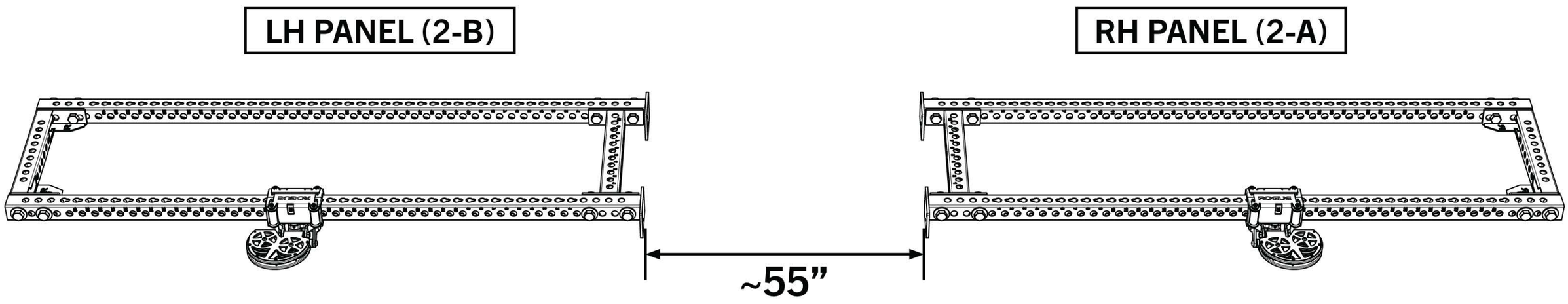

3-A

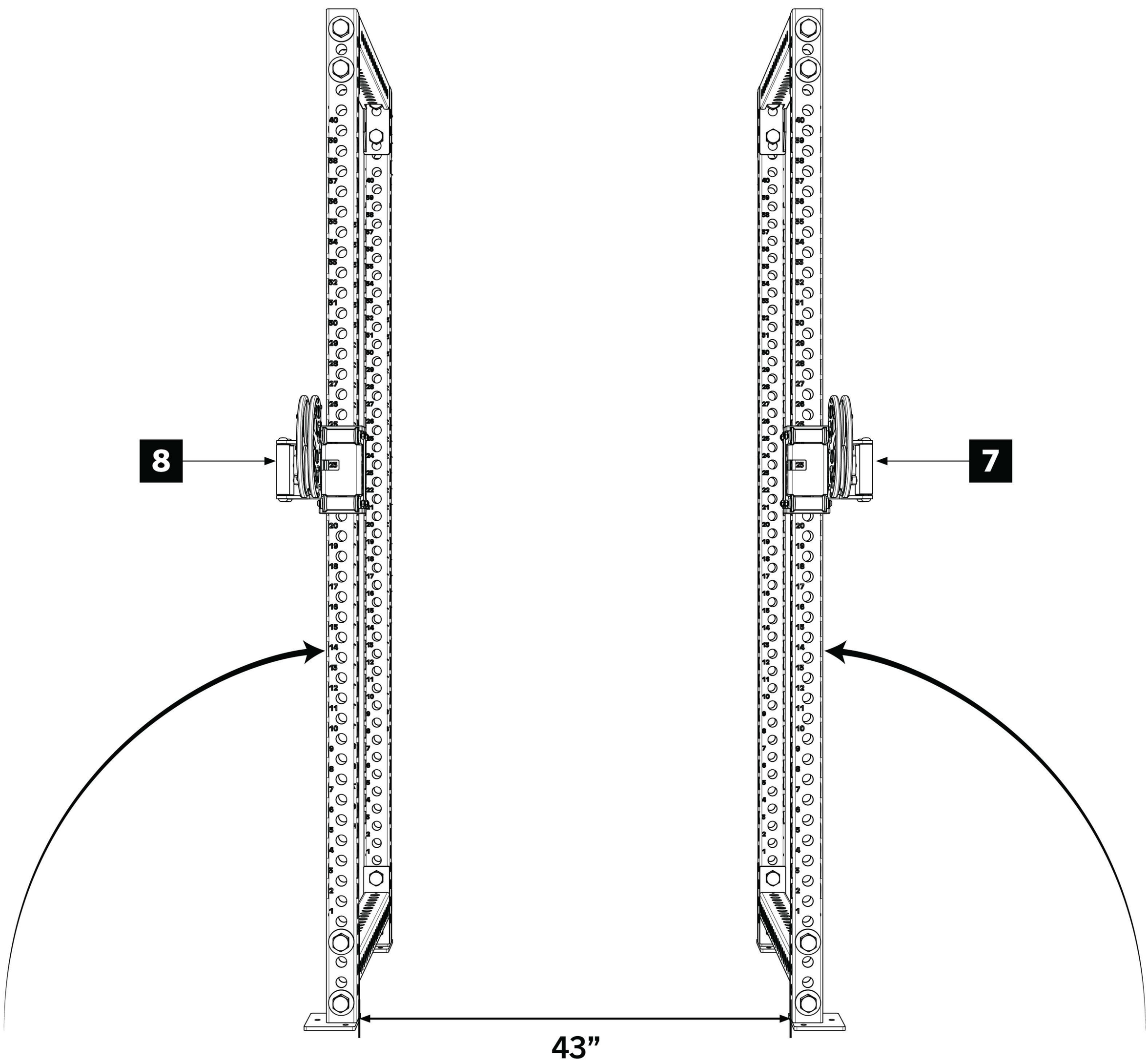

STEP 4

Tools Required:

- 3/8” Allen Key
- Attach 43” Spanning Crossmember [**3**] to middle Uprights using 1” x 4-3/4” Hex Bolt [**50**], 1” Flat Washers [**52**], 1” Lock Washers [**53**], and 1” Hex Nuts [**54**].
- [!] Fully tighten 1” Shoulder Bolts using 3/8” Allen Key. **DO NOT TIGHTEN HEX BOLTS.**

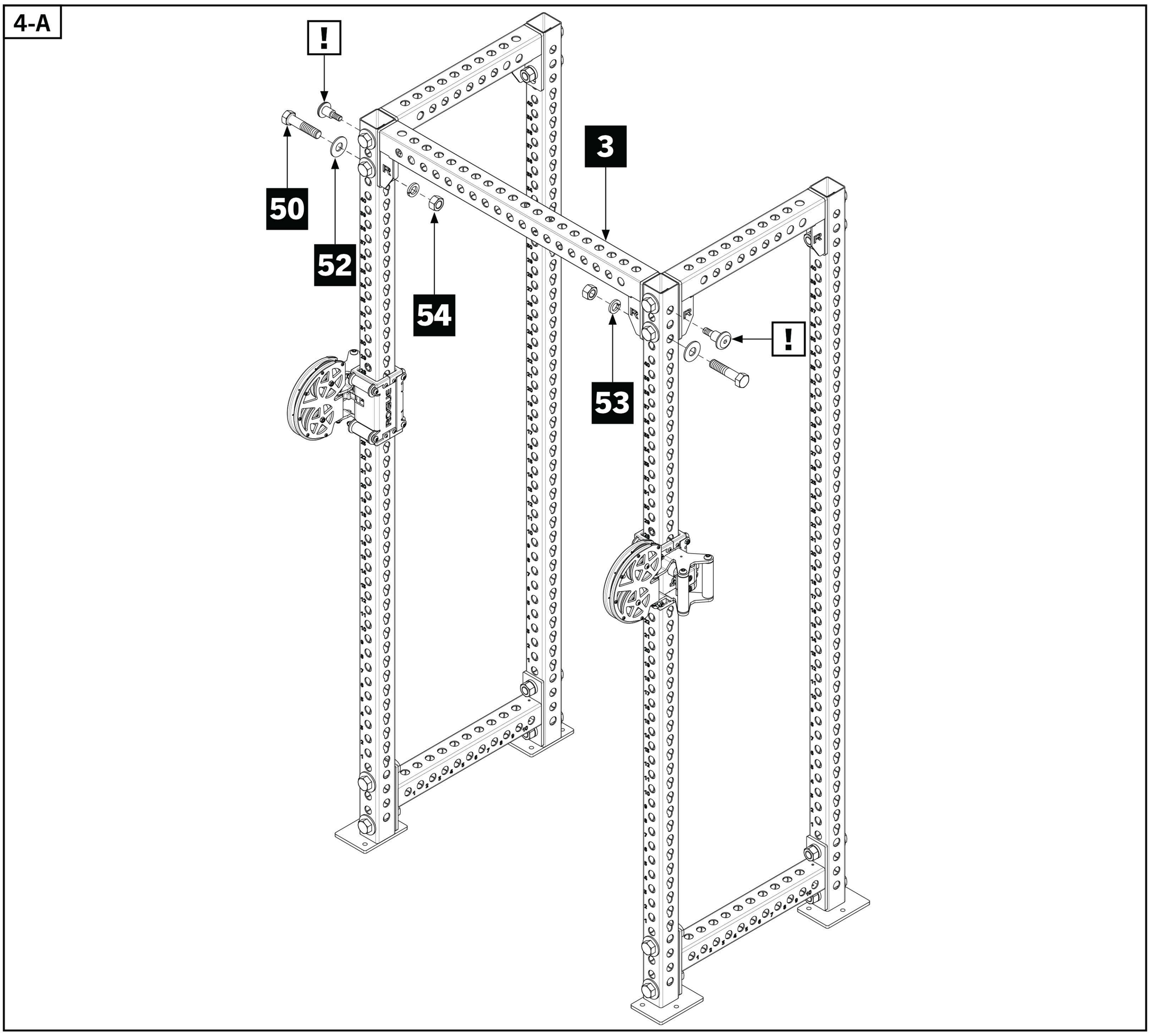

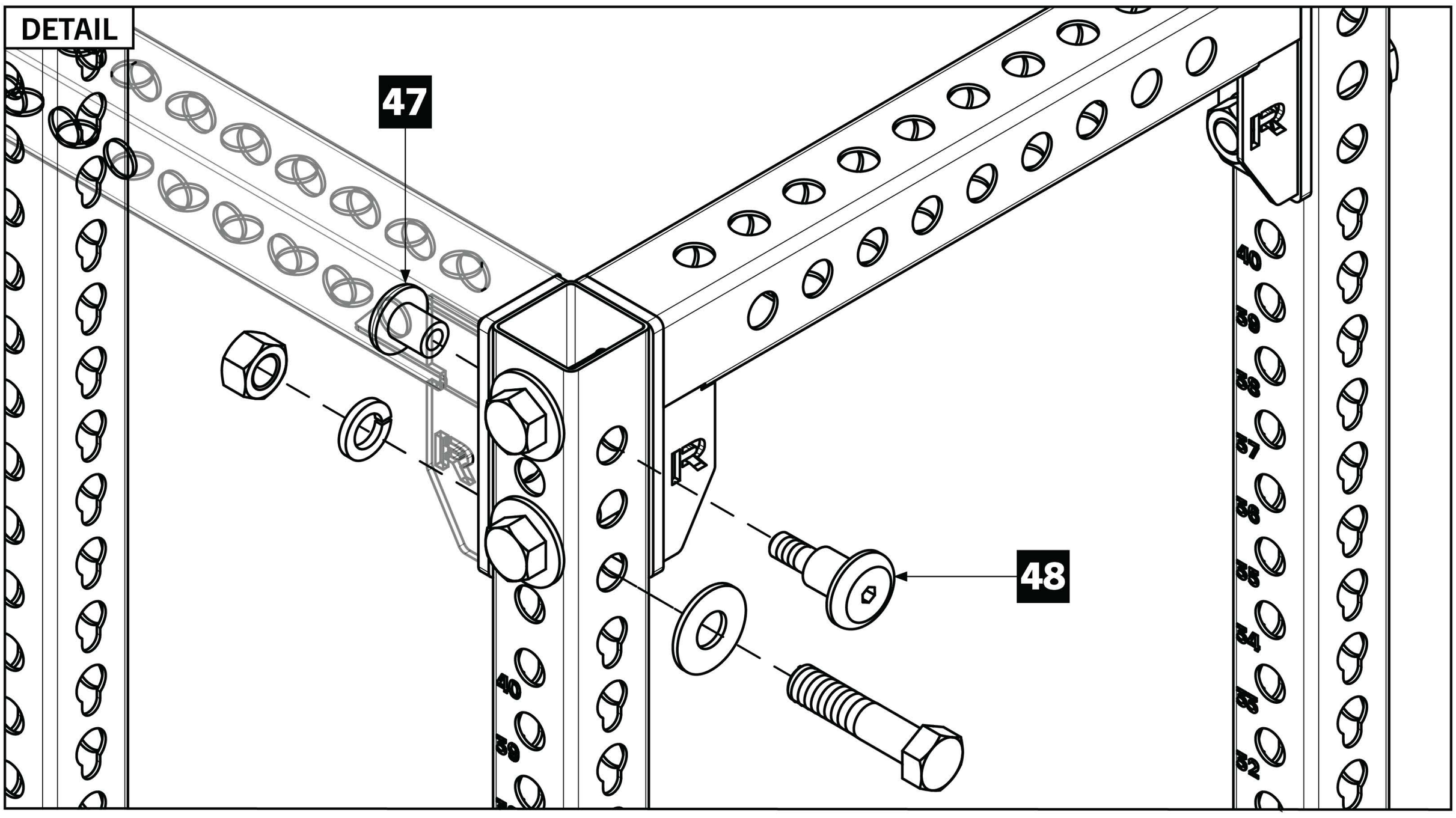

STEP 5

- Leaving 1” x 4-3/4” Hex Bolts in place, remove all four lower Lock Washers and Hex Nuts from rear Uprights as shown in **5-A**.
- Attach Low Row Crossmember [**6**] and re-assemble the hardware removed above.

Note:
- [!] “X” cutout on Low Row Crossmember should be facing down towards the ground.

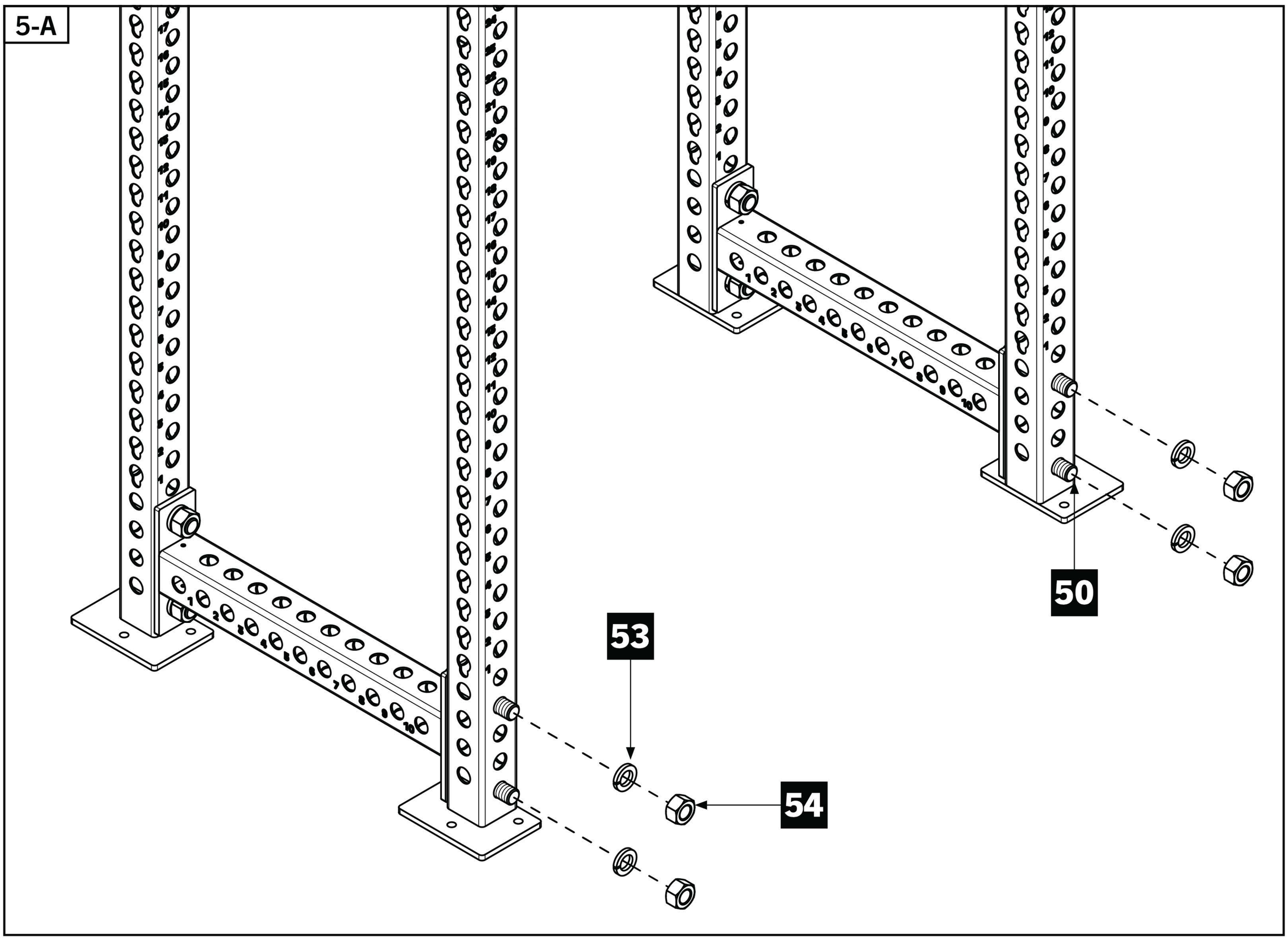

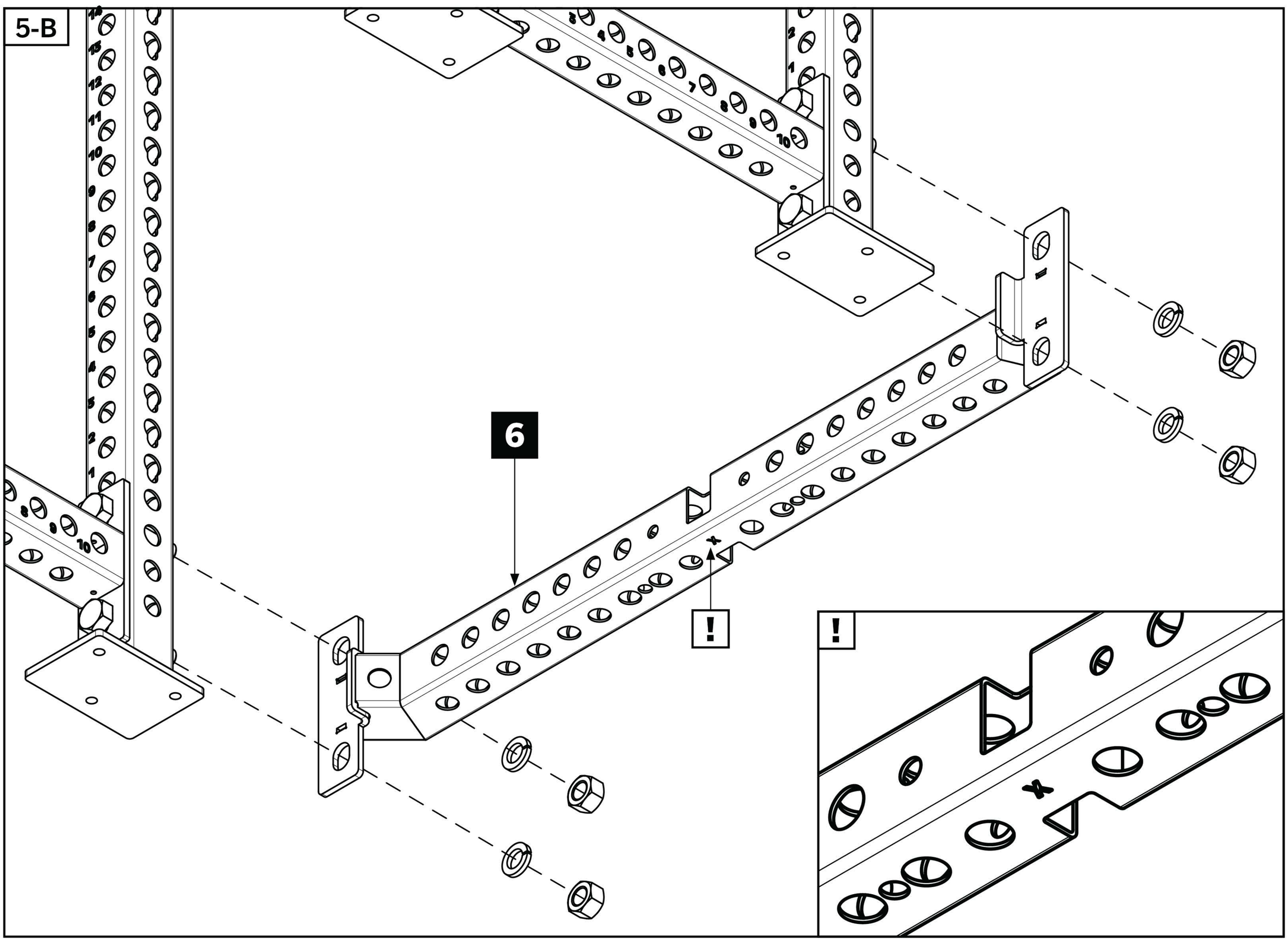

STEP 6

Tools Required:

- 7/32” Allen Key, 9/16” Wrench
- Swivel Trolleys [**7,8**] need to be calibrated for your specific rack.
- Keeping the Swivel Trolleys locked in place, tighten the Button Head Screws shown in **6-A** using 7/32” Allen Key until looseness or “wobble” is gone.
- Unlock pop pins and roll Trolleys up and down Upright several inches to feel tightness. If wobble persists, tighten the Screws in **6-A** again. If any friction is felt, Trolleys are too tight and Screws should be loosened a quarter turn.
- Once calibrated, tighten both rollers on rear of Trolleys using Allen Key and Wrench.

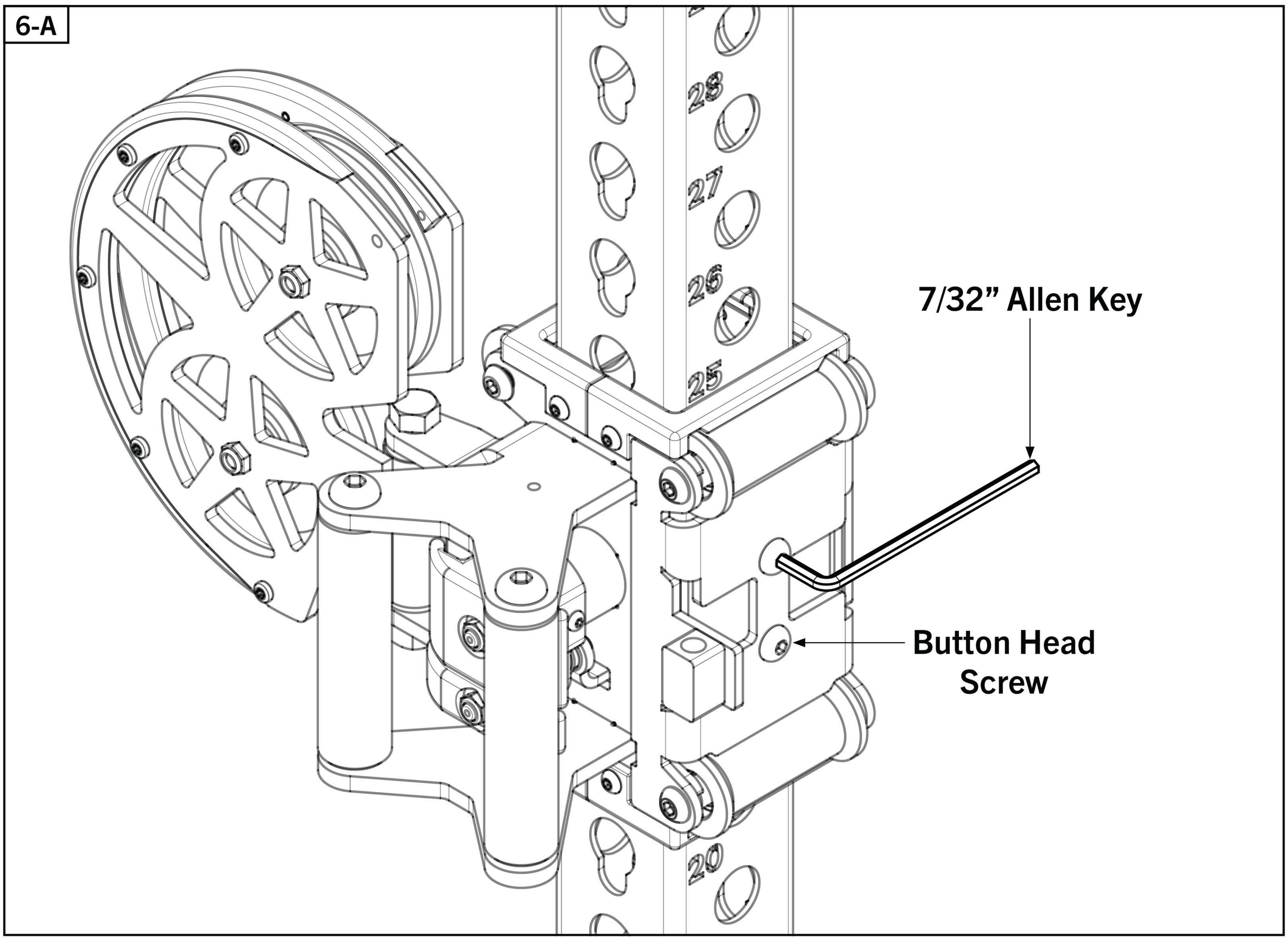

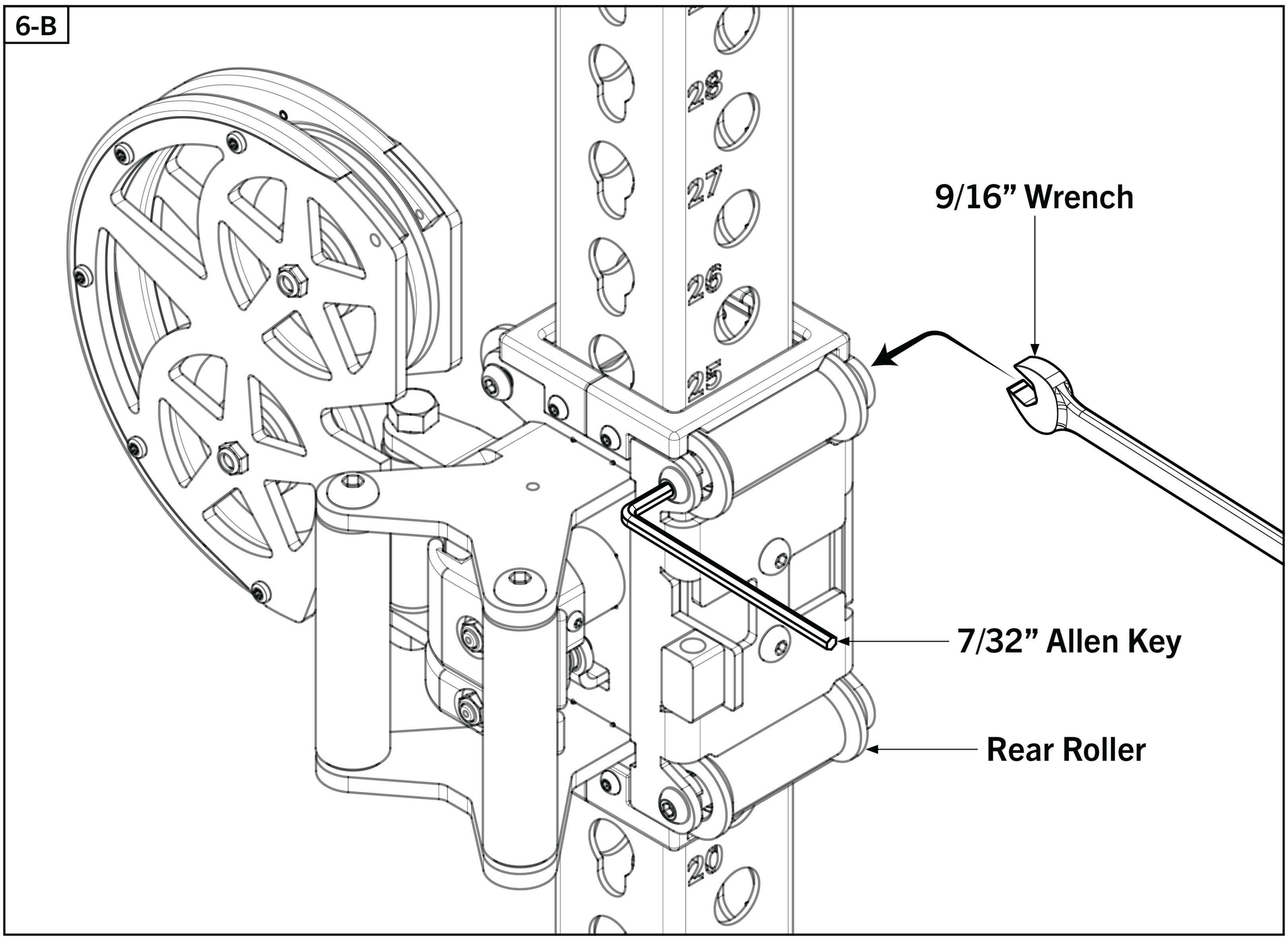

STEP 7

- For ease of assembly, pull the pop-pin and remove Foot Catch from Low Row Foot Plate Assembly as shown in detail view (right).
- Attach Foot Plate Assembly [**17**] and Low Rear Pulley Assembly [**18**] to Low Row Crossmember [**6**] using indicated 5/8” and 1/2” hardware below.

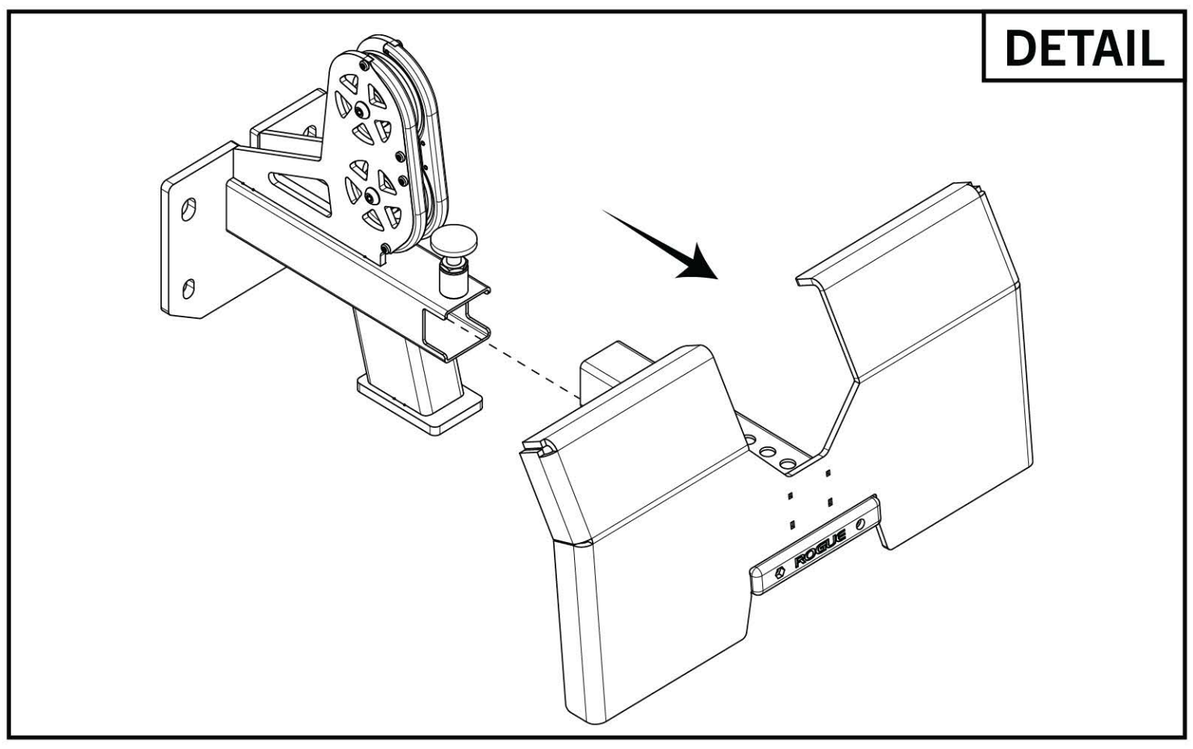

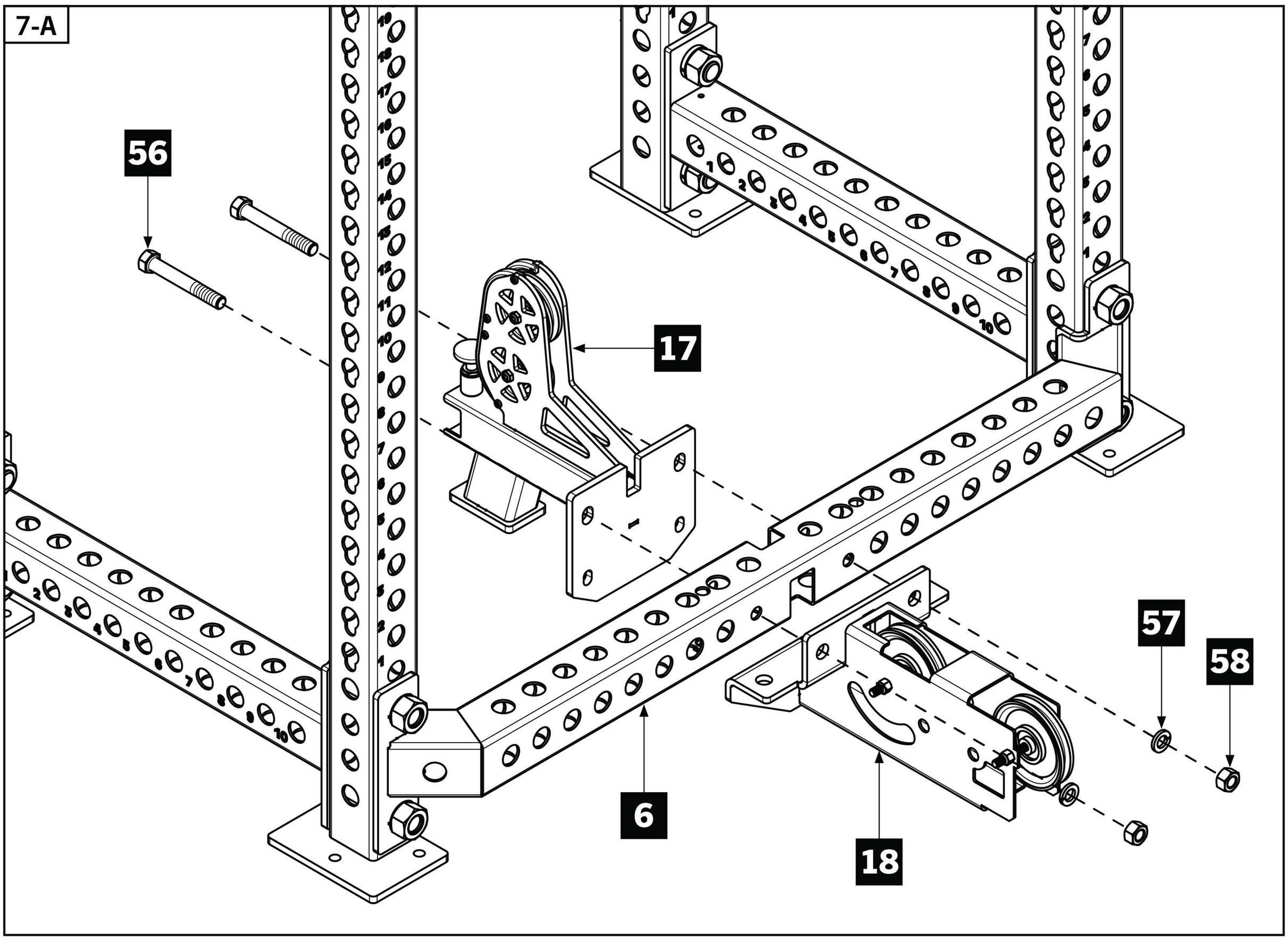

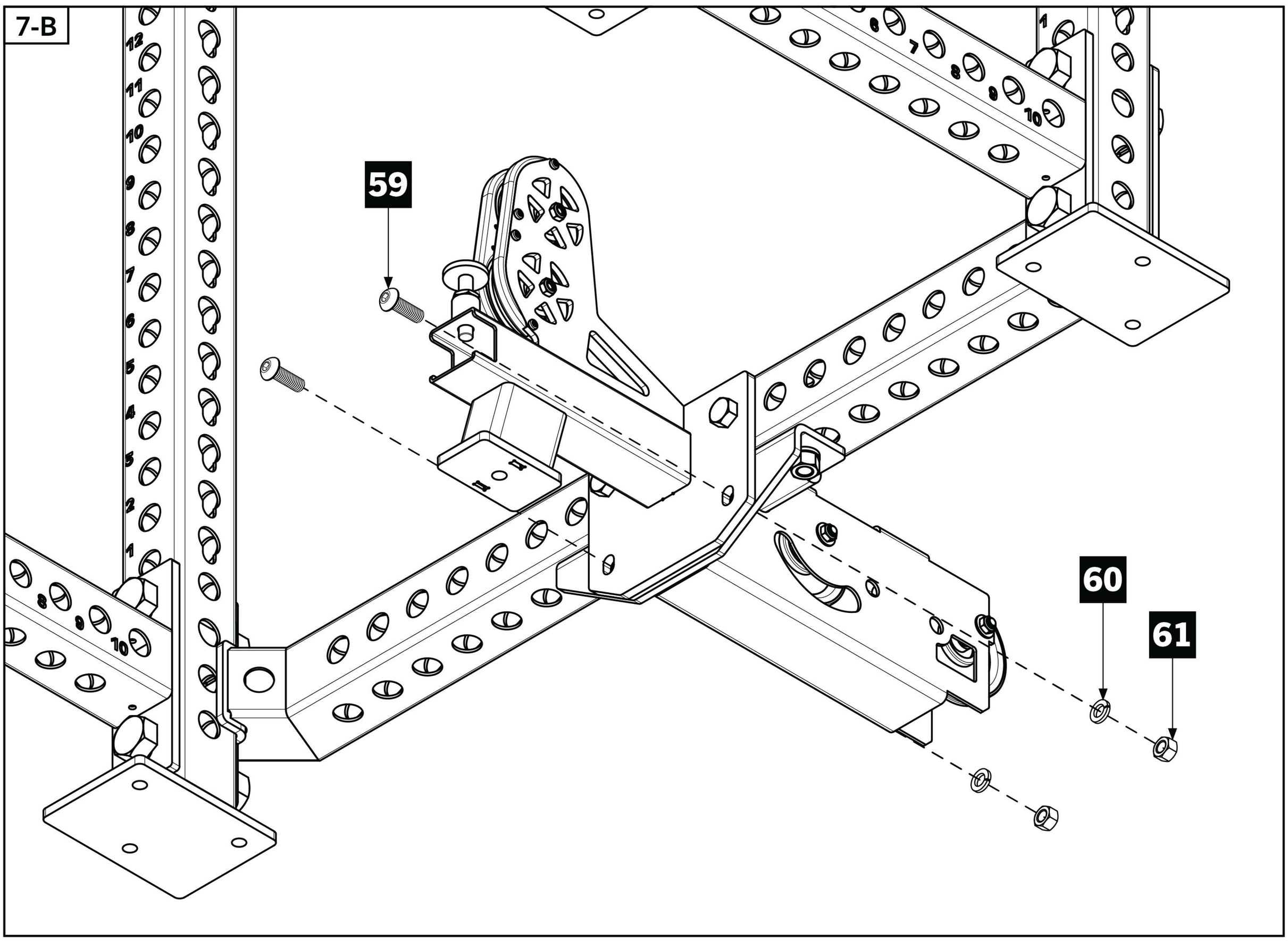

STEP 8

- Align Rear 3X3 Upright [**2**] to back of Low Rear Pulley Assembly [**18**]**.** Footplate should slide under the cutout at the bottom of Pulley Assembly.
- Secure Upright to Pulley Assembly by attaching 5/8” x 4-1/2” Hex Bolts [**56**], Rear Connector Plates [**19**], 5/8” Lock Washers [**57**], and 5/8” Hex Nuts [**58**]**.**

Note:

- Ensure Rear Connector Plates are installed with the arrow indicator stickers facing outward as shown in **8-B**.

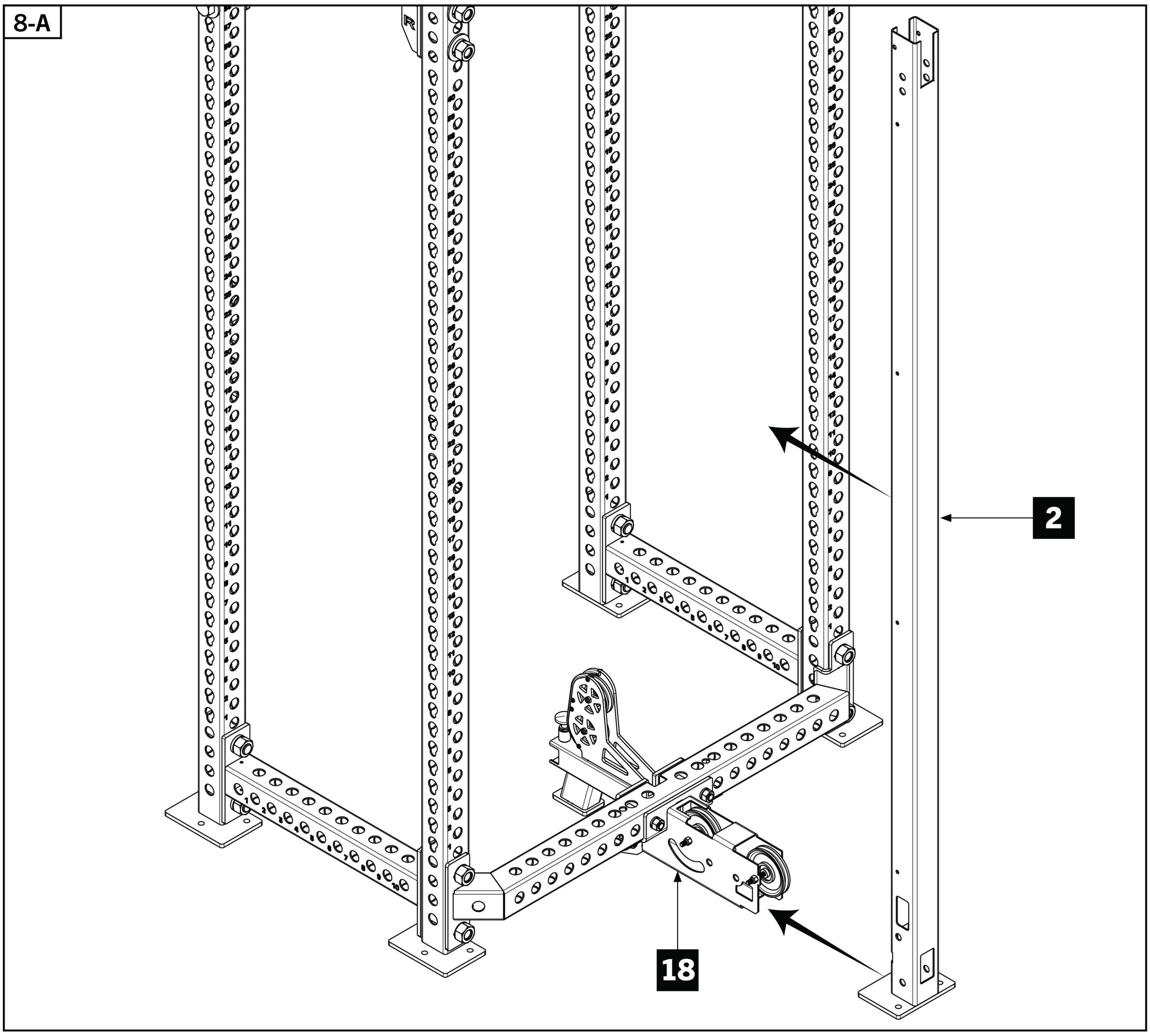

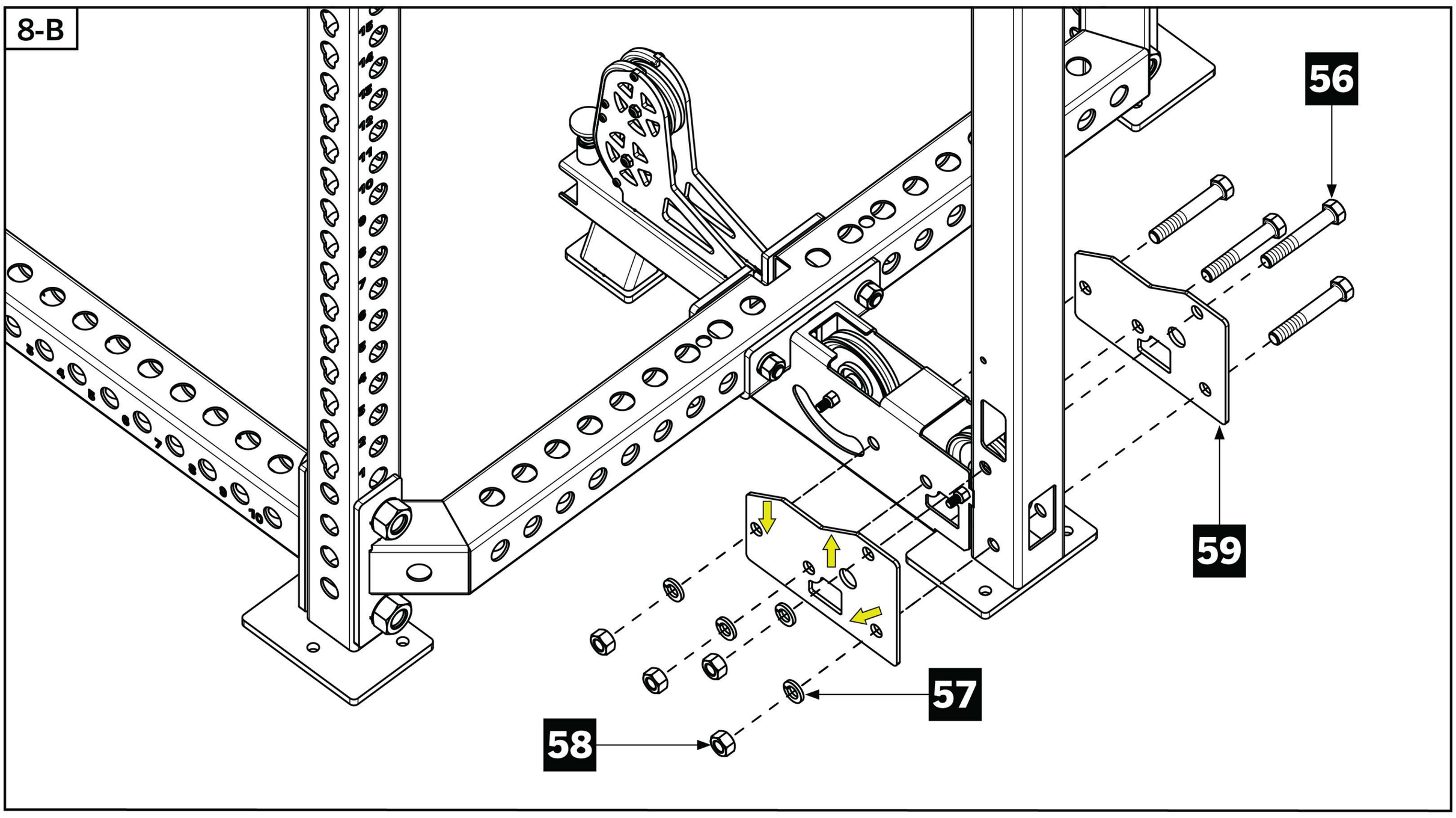

STEP 9

Tools Required:

- 15/16” Socket / Wrench
- Attach Weight Stack Shroud Bottom Bracket [**67**] and Weight Stack Spacer [**24**] to middle of Low Row Crossmember [**6**] by using 5/8” x 5” Hex Bolts [**55**], 5/8” Lock Washers [**57**], and 5/8” Hex Nuts [**58**].
- **Fully tighten** 5/8” vertical hardware in **9-A**.
- Place Weight Stack Bumpers [**26**] over outer 1” holes on the Weight Stack Spacer and insert Guide Rods [**20**] until they rest on top of the Low Row Crossmember.

Note:

- Shroud Bracket [**67**] only included if shroud kit was purchased. **Simply bolt the Weight Stack Spacer using hardware shown if shrouds were not purchased.**

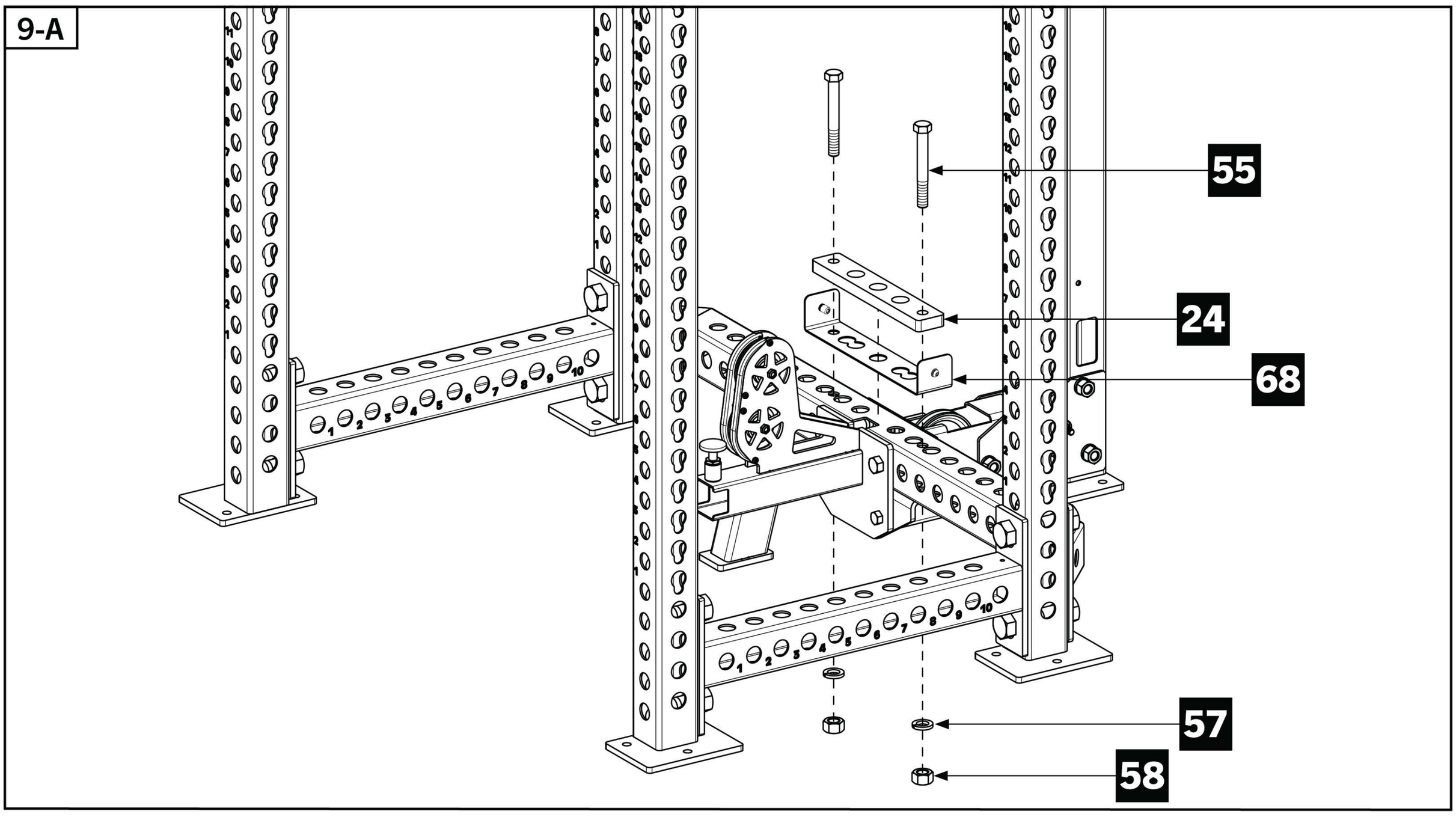

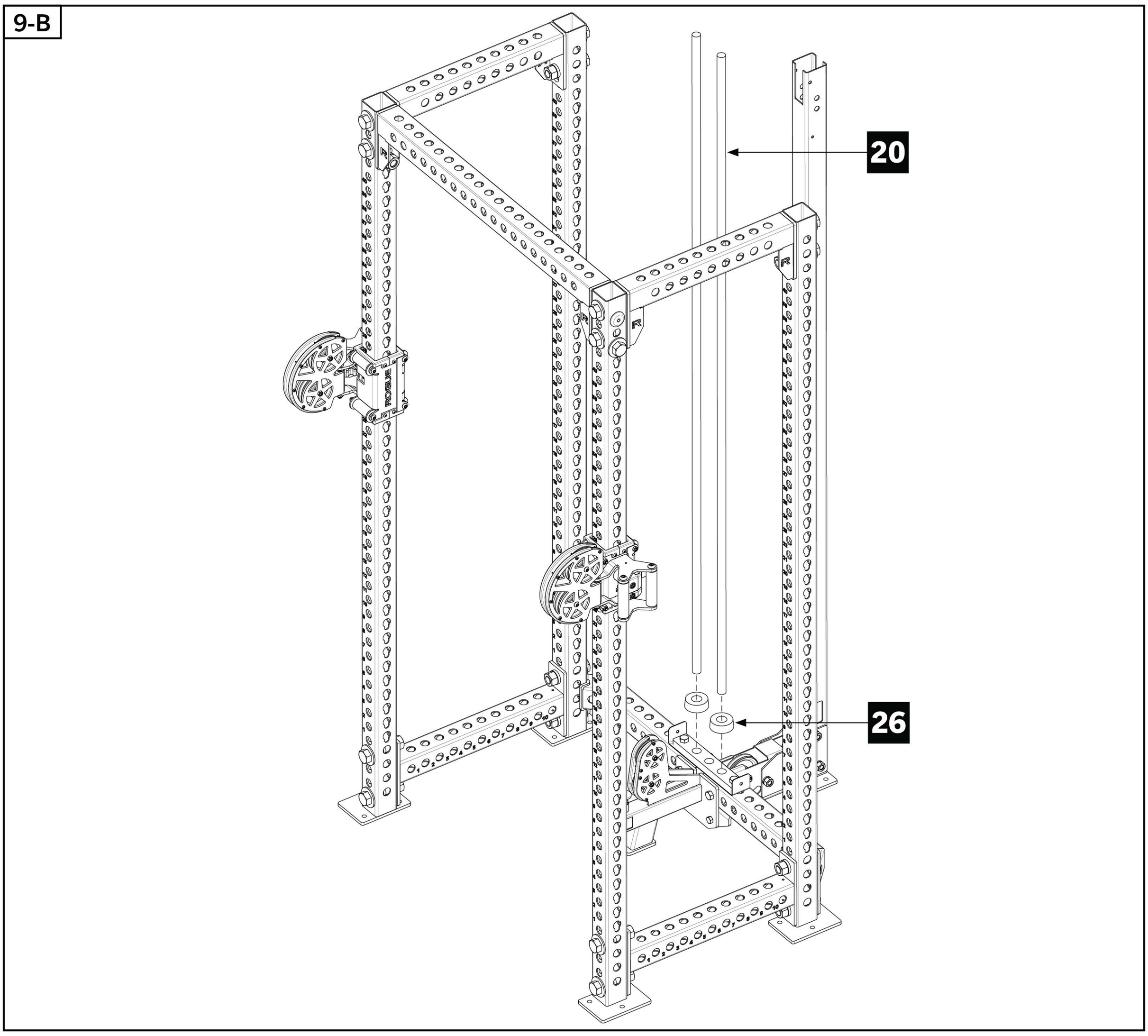

STEP 10

- Angle the Guide Rods toward the front of the rack.
- One at a time, carefully stack all included 10LB Weight Stack Plates [**22**] down the Guide Rods [**20**], ensuring not to drop them.
- **Note:** this is best accomplished with two or three people.
- Once all weights are stacked, slide the Weight Stack Stem [**21**] down the Guide Rods until resting on top of weight stack.
- Ensure 20LB Weight Stack Sticker on the top Plate of the stack is facing towards the front of rack as shown in Detail view.

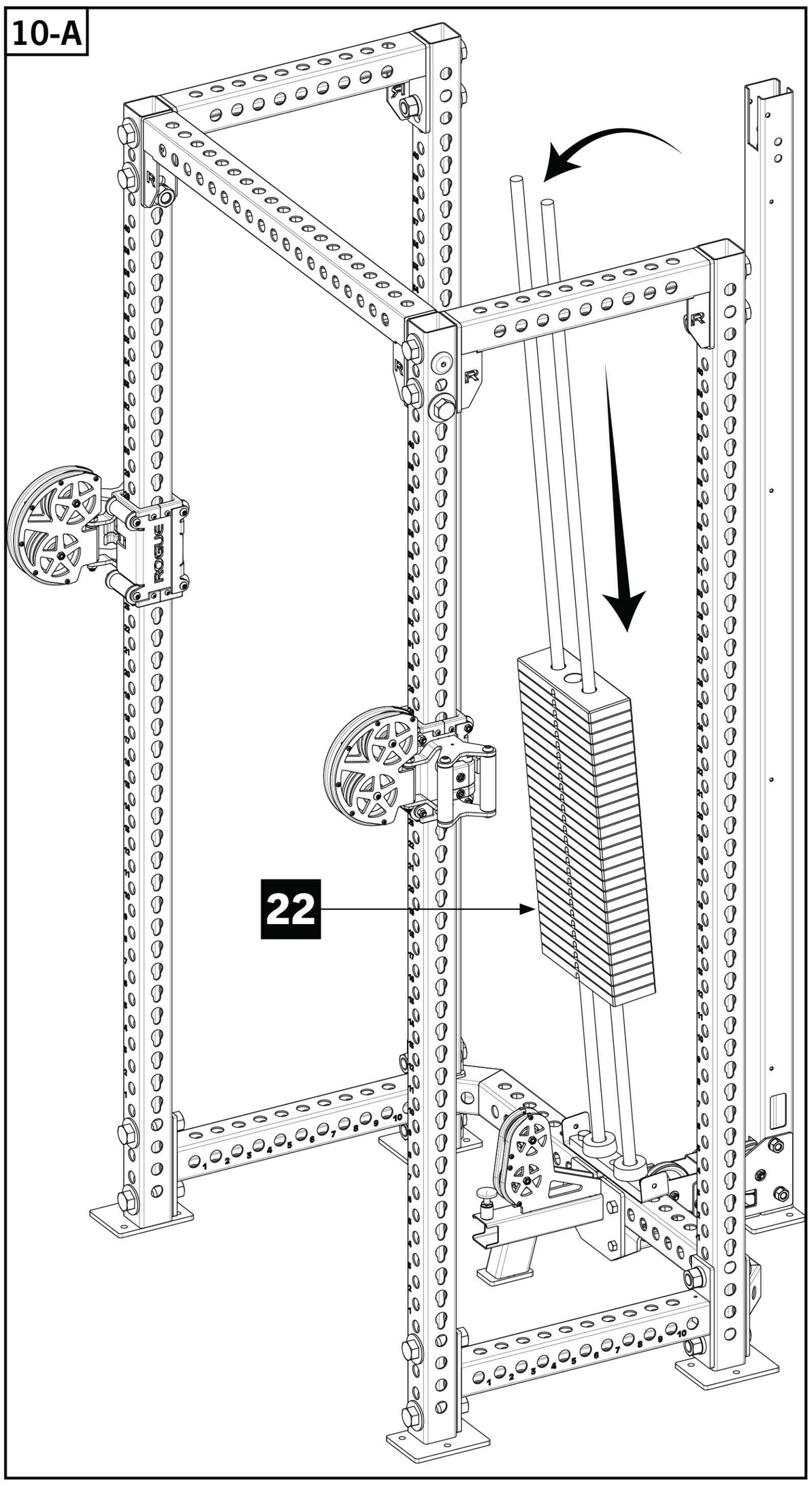

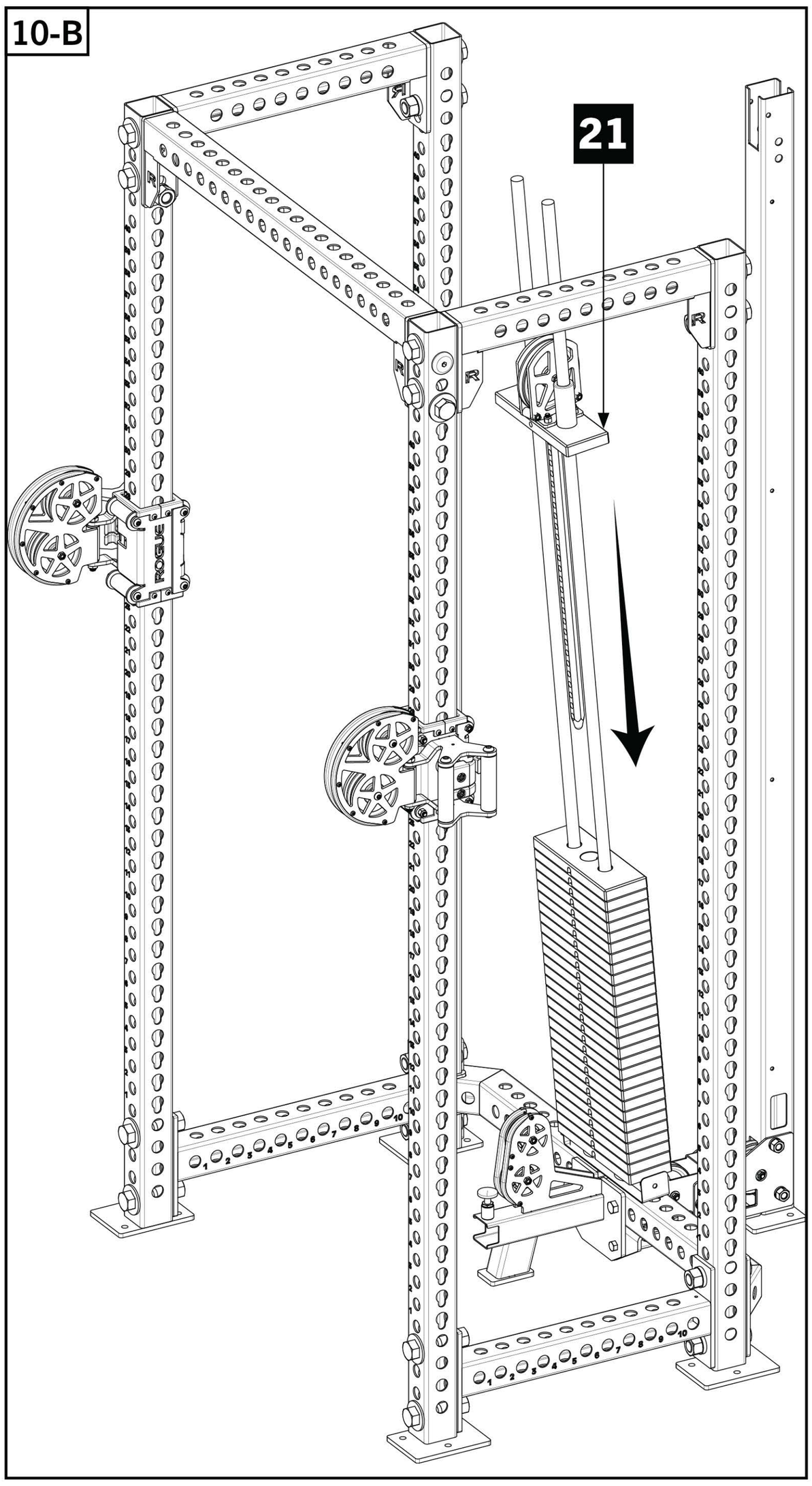

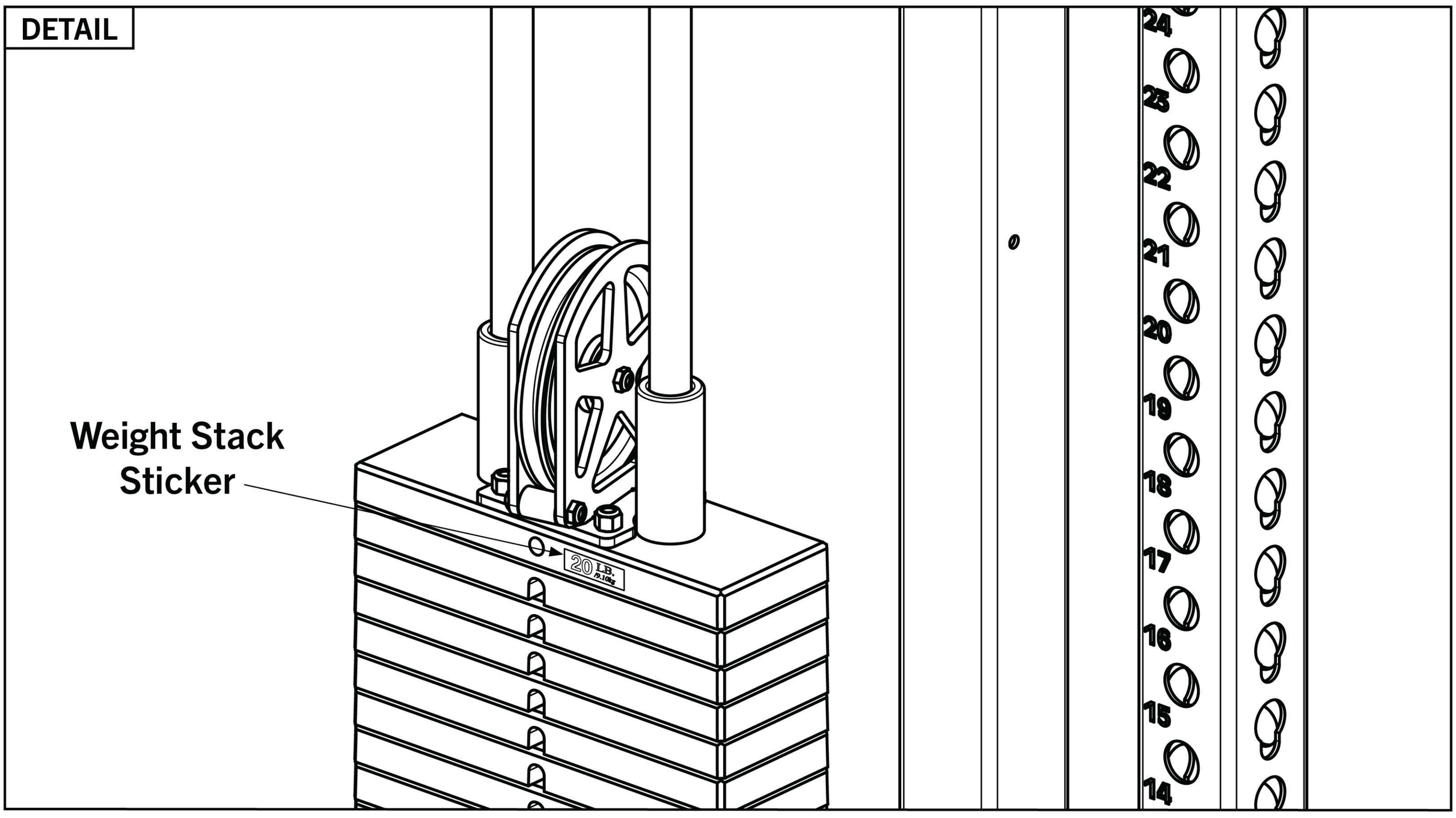

STEP 11

- Slide Top Weight Stack Stop Block [**25**] and Guide Rod Spacers [**27**] down guide rods and rest on top of Weight Stack Stem Pulley as shown.

11-A

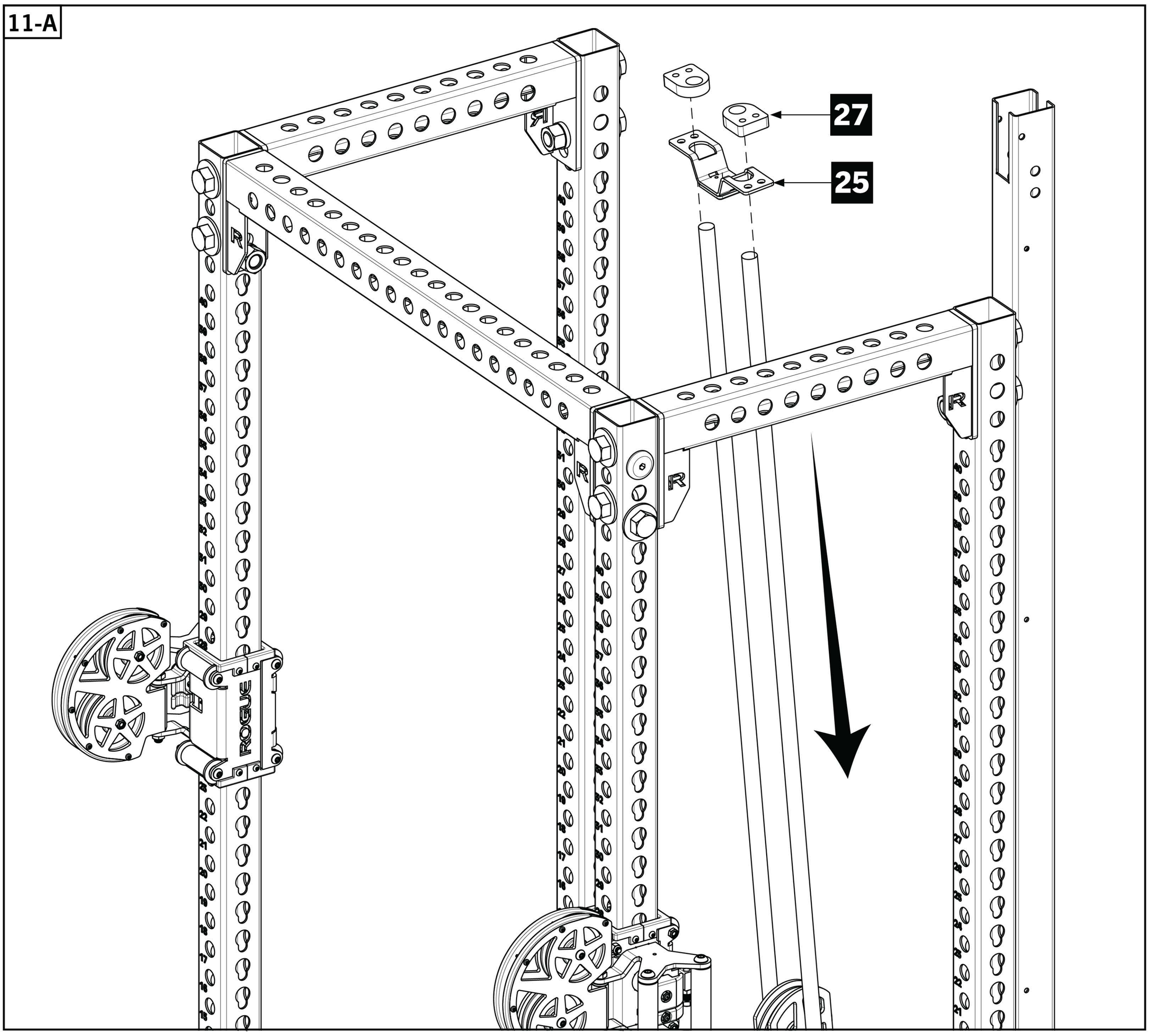

DETAIL

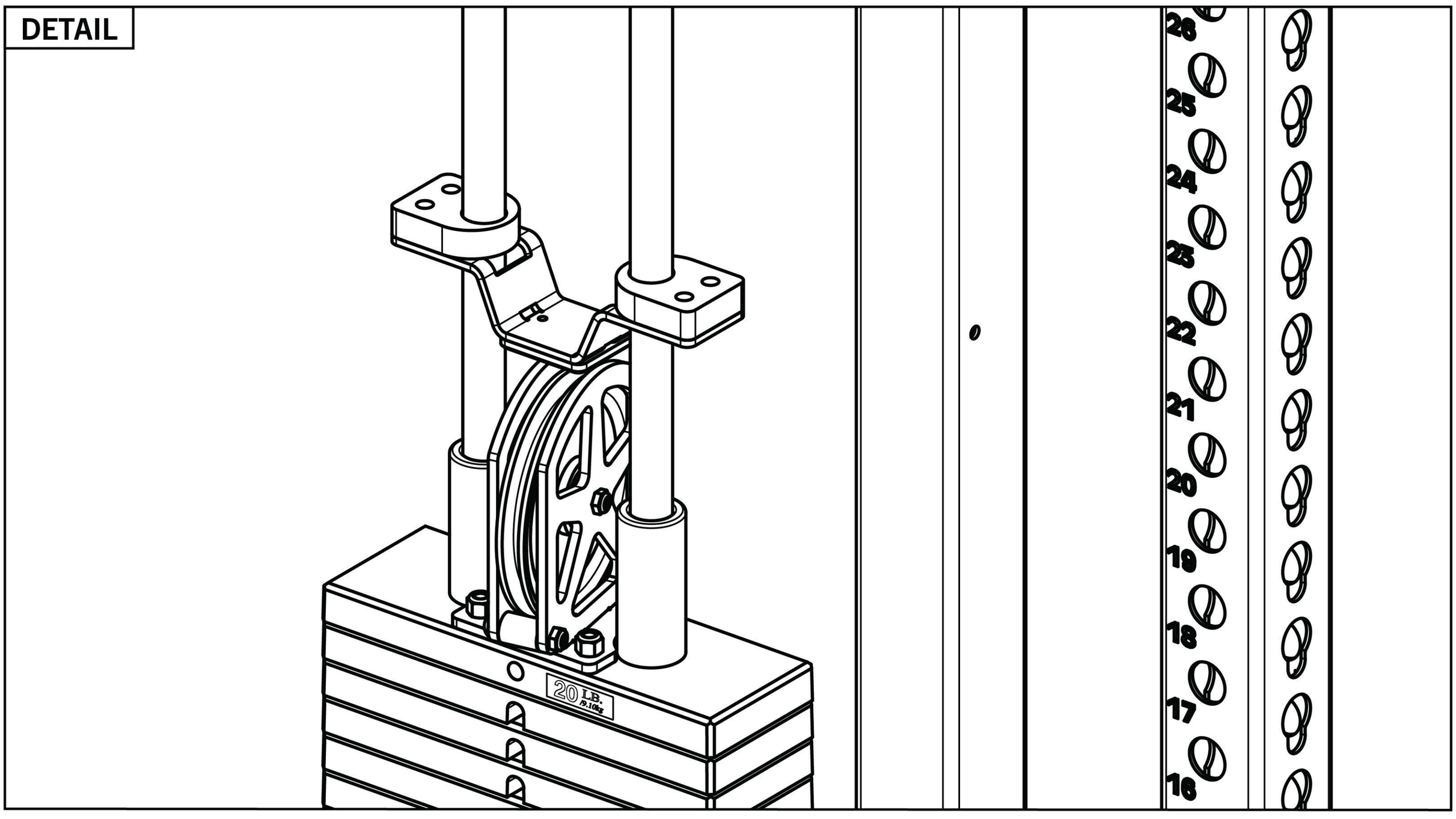

STEP 12

- Assemble Top Rear Angle Crossmember - RH [**11**] into position on rear of rack as shown.
- Assemble Top Rear Angle Crossmember - LH [**12**].
- Ensure Angle Crossmembers are properly locked into Rear 3X3 Upright [**2**] as shown on next page.

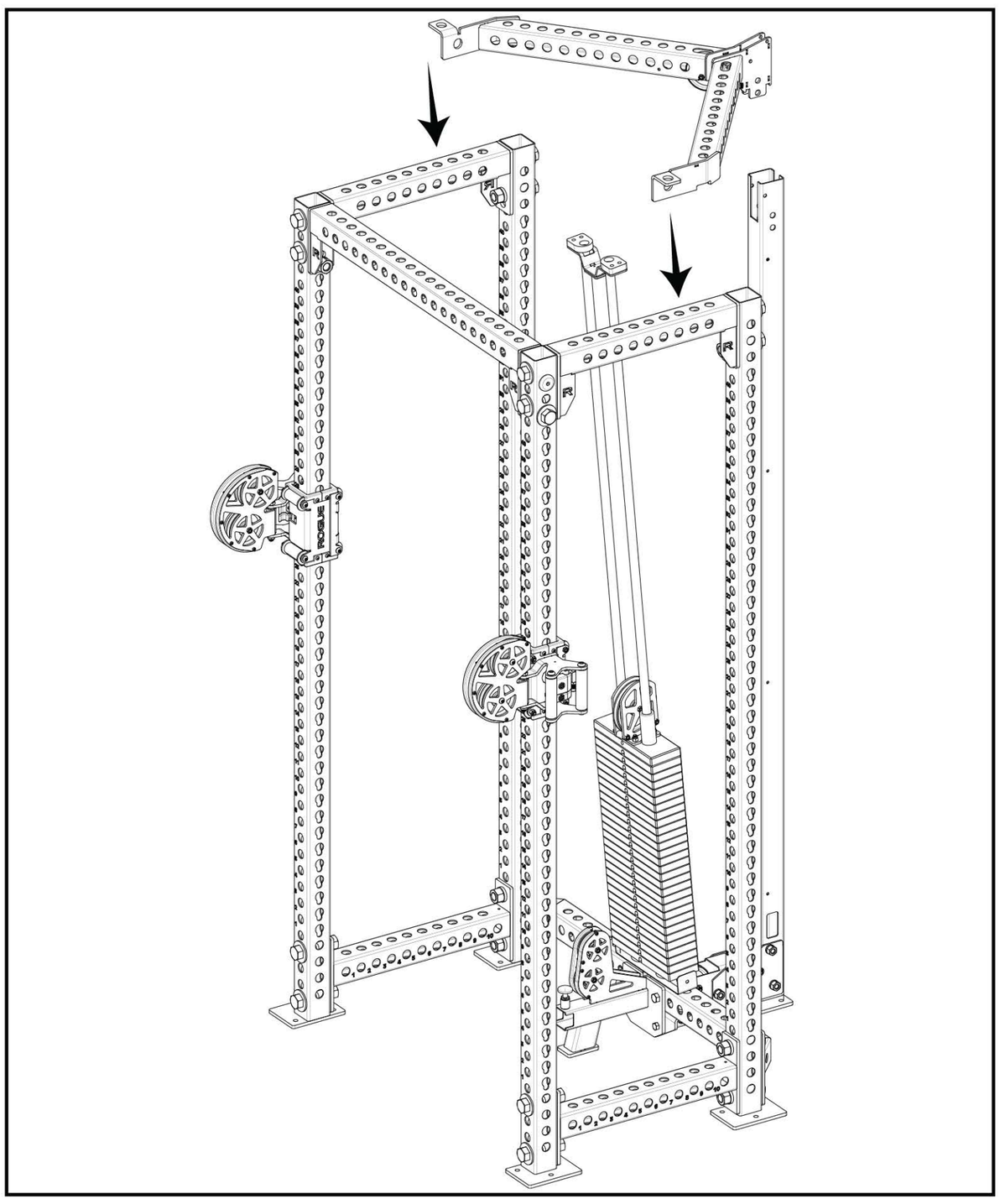

12-A

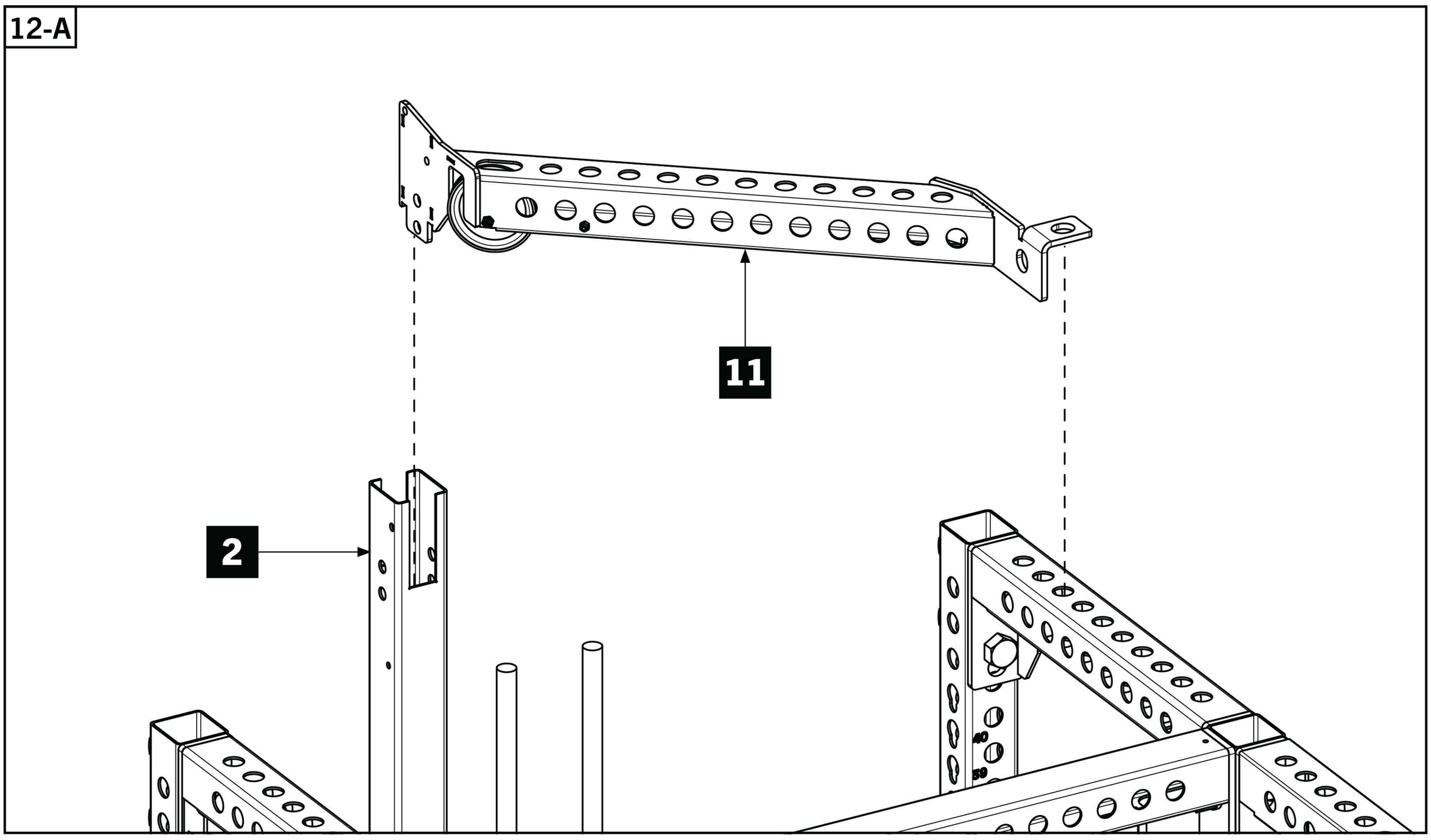

12-B

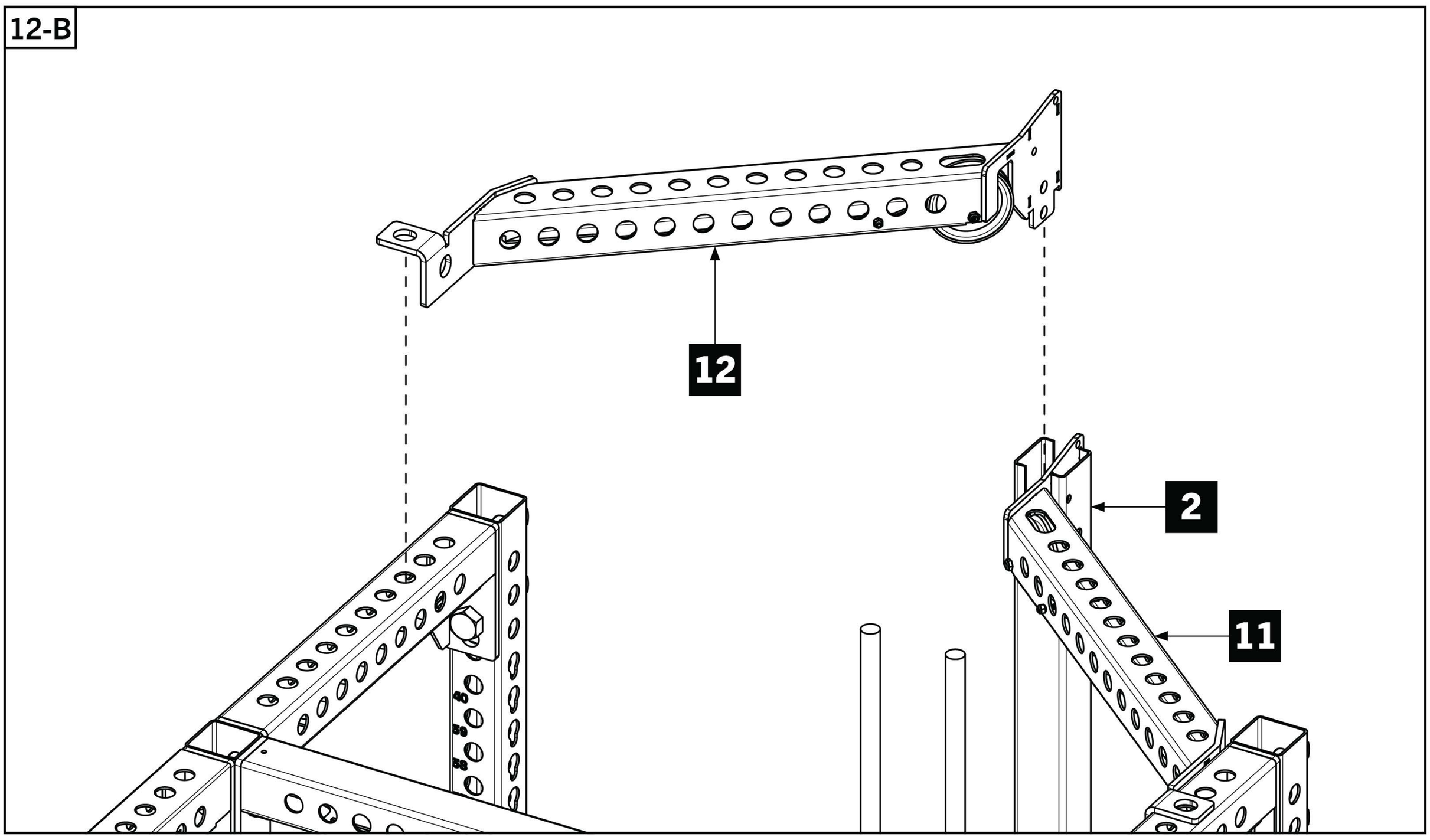

STEP 12 (CONTINUED)

- Secure Angle Crossmembers to Rear Top Crossmembers using 1” x 5” Hex Bolts [**49**], Side Shroud Top Brackets [**72**], 1” Lock Washers [**53**], and 1” Hex Nuts [**54**].

Note:
- Use 1” Flat Washers [**52**] instead of Side Shroud Top Brackets if Shroud Kit was not purchased.

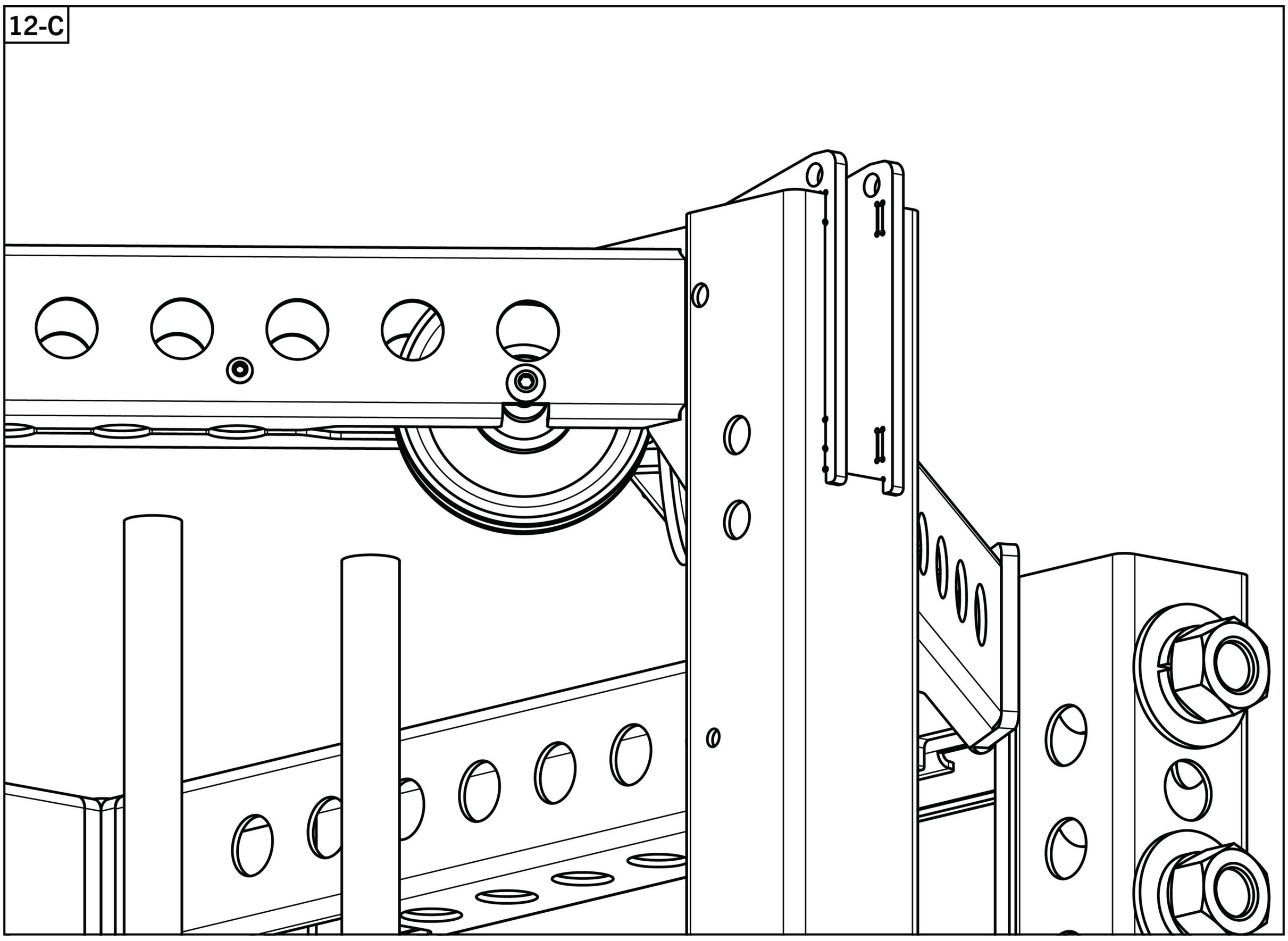

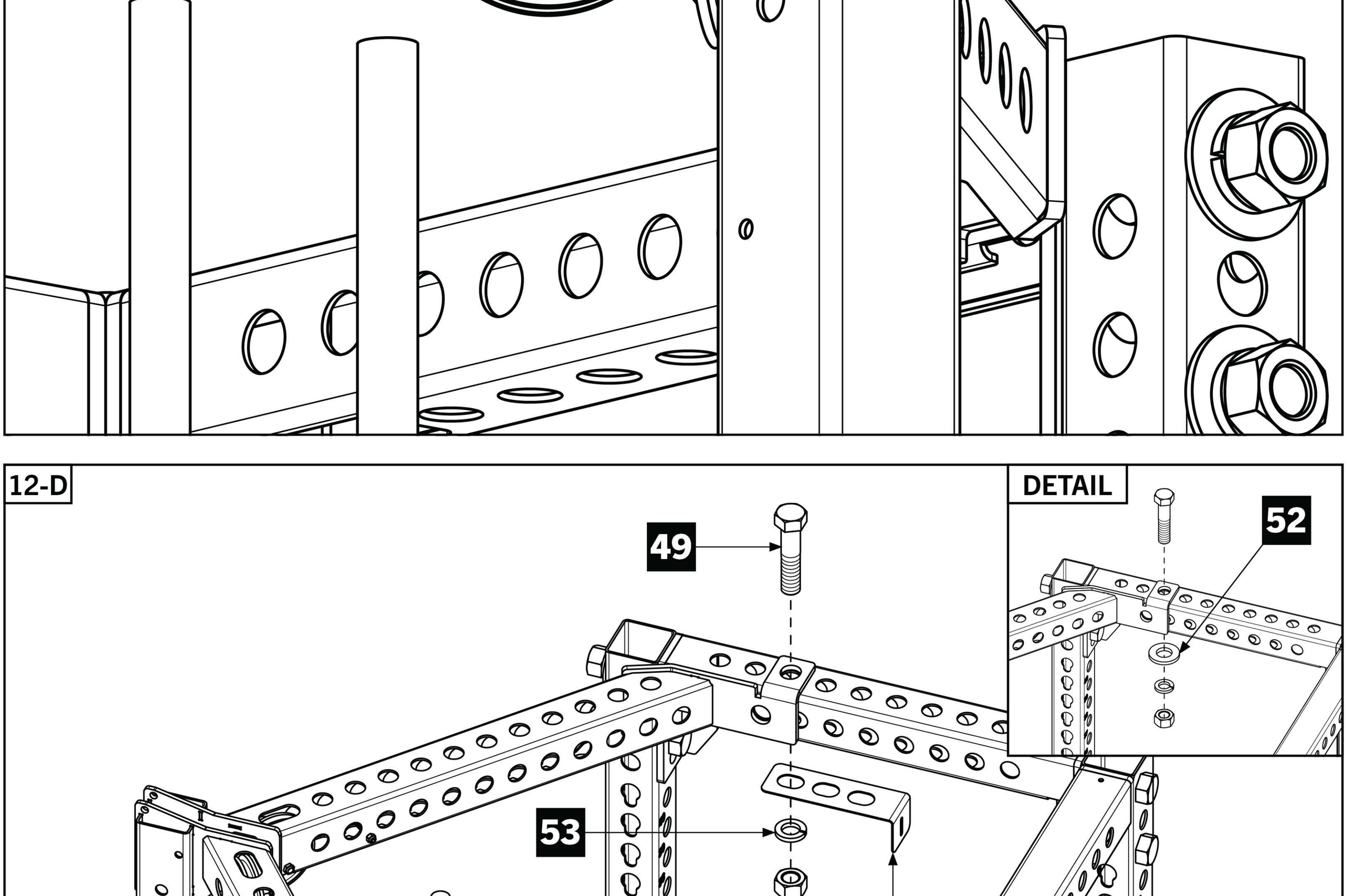

STEP 13

- Bolt Lat Bar Hanger [**16**], Lat Pulldown Pulley Bracket [**15**], and Top Center Crossmember [**10**] to 43” Spanning Crossmember using 1” x 5” Hex Bolts [**49**], 1” Lock Washers [**53**], and 1” Hex Nuts [**54**] as shown in **13-A**.

- Bolt Top Rear Connector Plates RH [**13**] and LH [**14**] to Top Center Crossmember [**10**] and Rear 3X3 Upright [**2**] using 5/8” x 4-1/2” Hex Bolts [**56**], 5/8” Lock Washers [**57**], and 5/8” Hex Nuts [**58**].

13-A

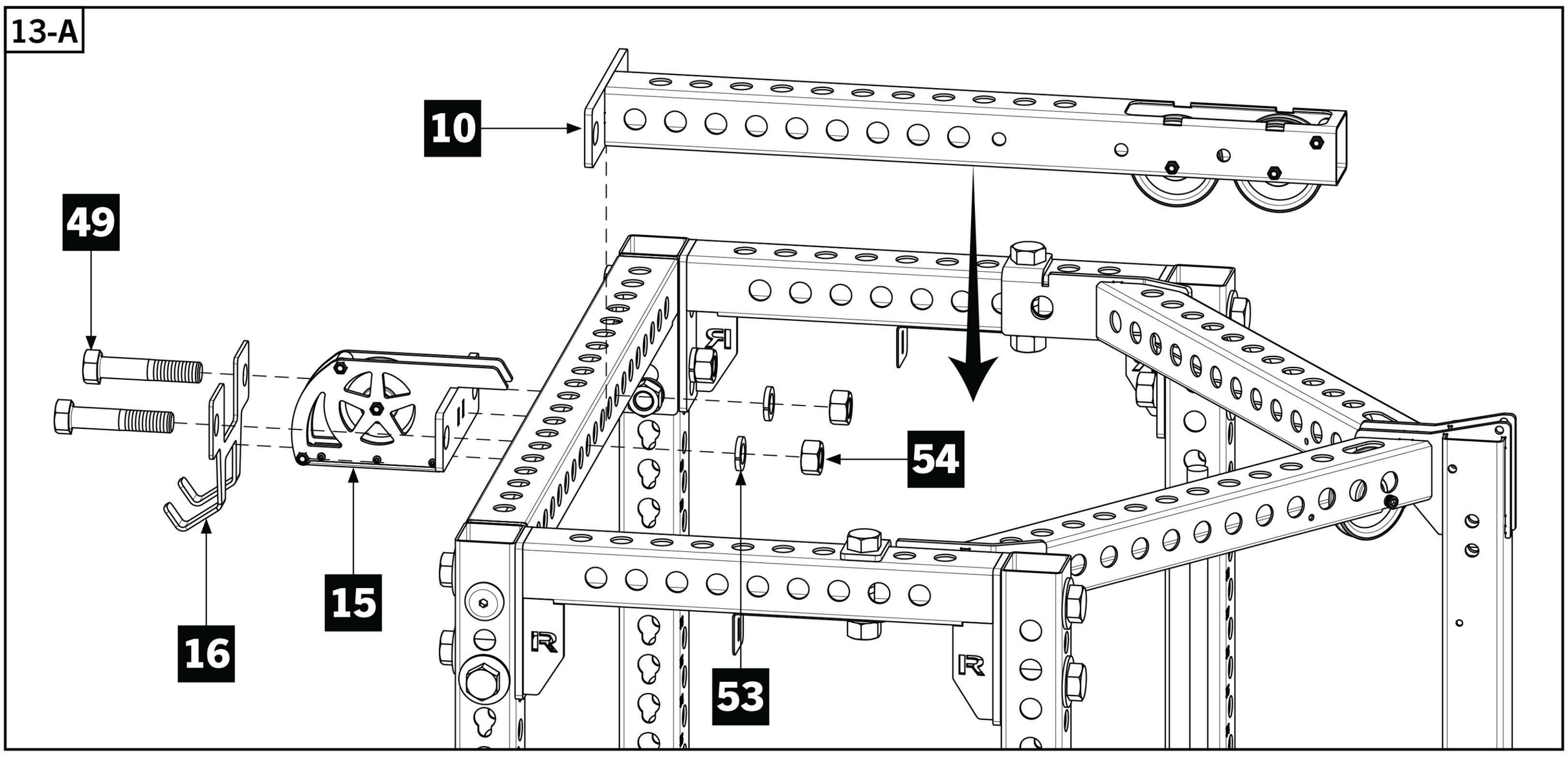

13-B

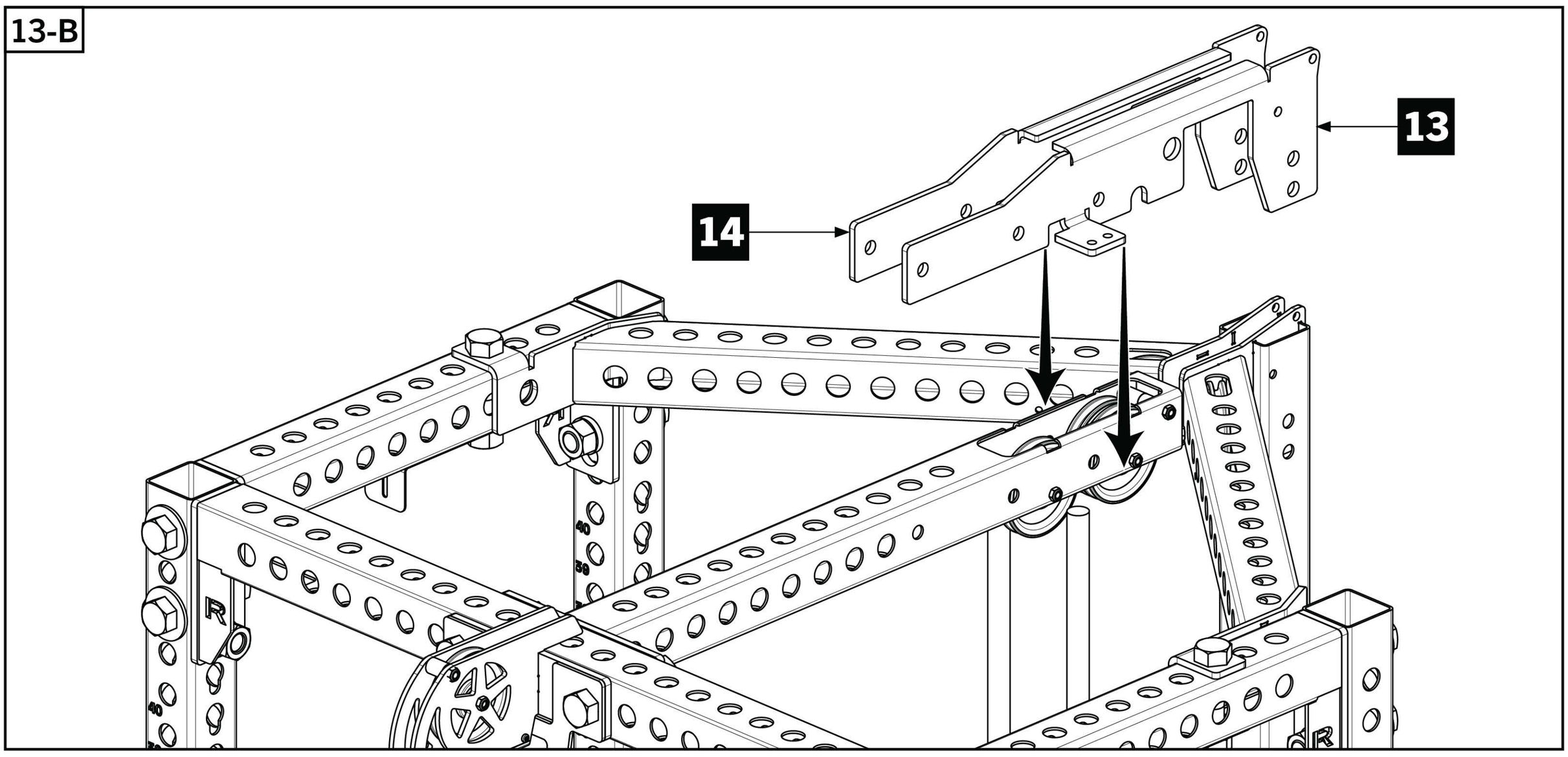

13-C

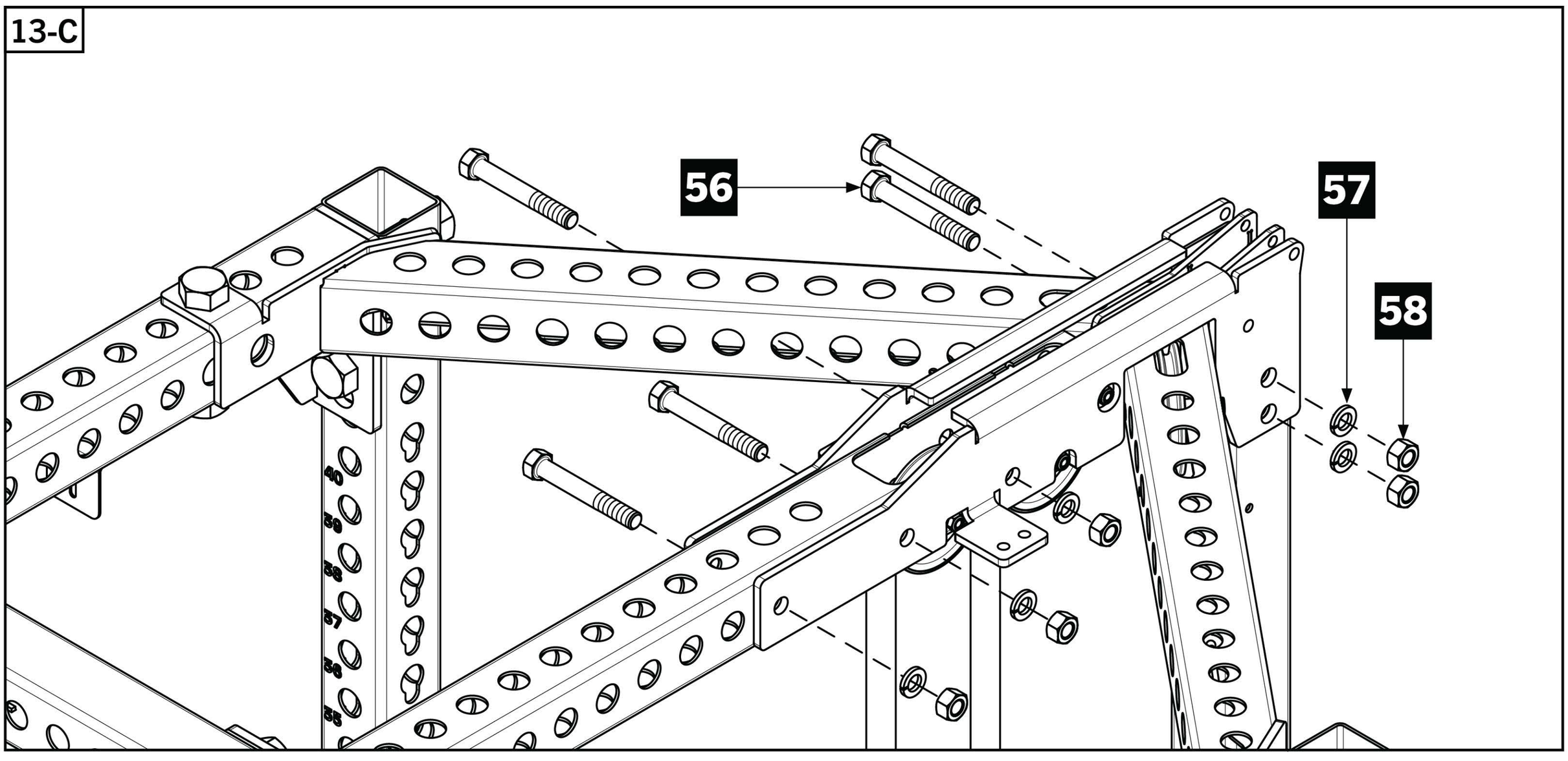

STEP 14

- Secure 4.5” Pulley [**34**] and 3/4” x 1” Cable Retainer [**35**] inside top rear center slot of the of the assembly using 3 /8” x 4” Button Head Screws [**62**] and 3/8” Thin Nylock Nuts [**64**] through the indicated holes.
- Slide parts assembled in **Step 11** back up to the top of the Guide Rods.
- Bolt Stop Block assembly to indicated holes on Top Rear Connector Plates [**13**] and [**14**] using 3/8” x 1.5” Button Head Screws [**63**] and 3/8” Thin Nylock Nuts [**64**].

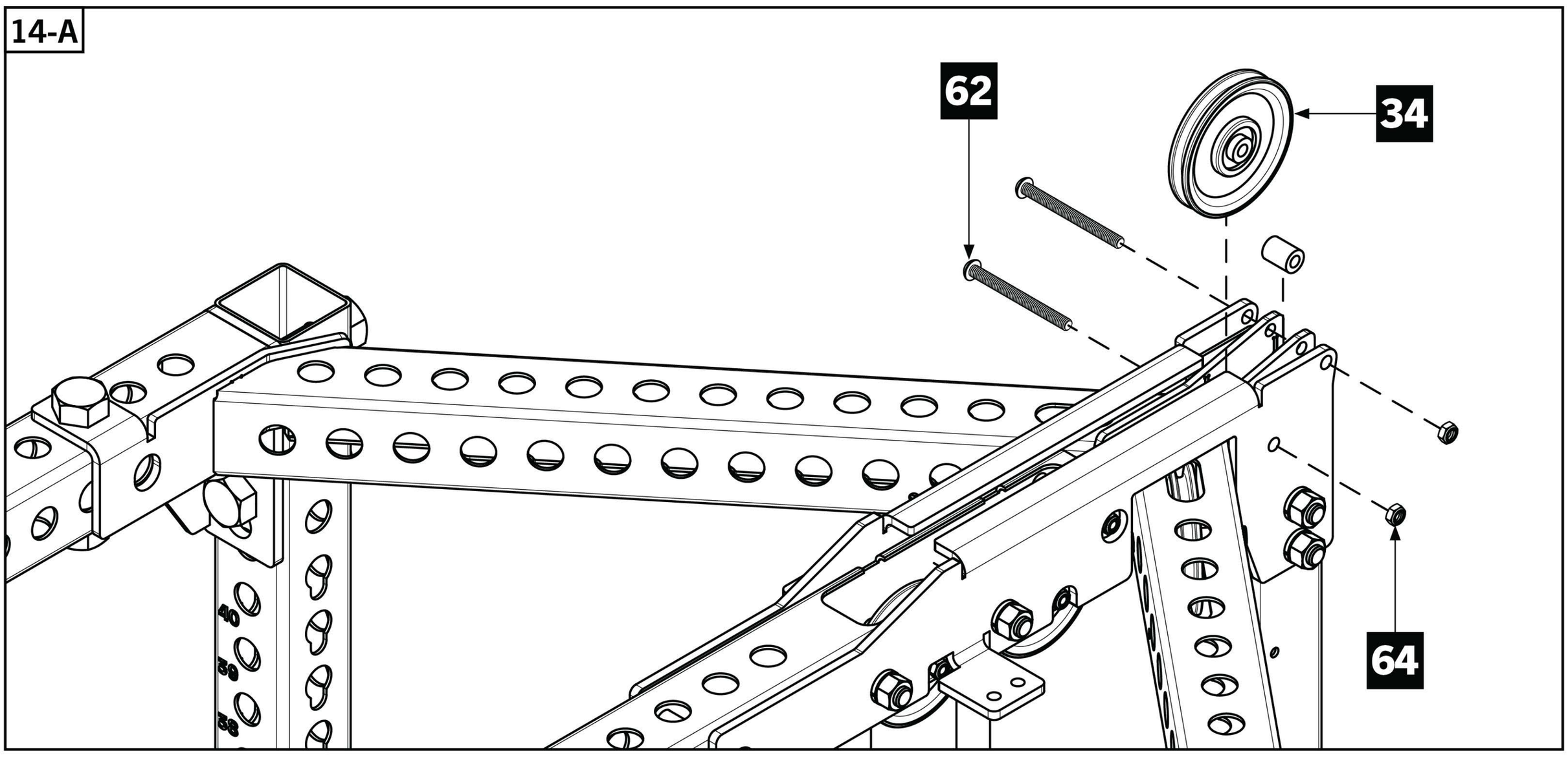

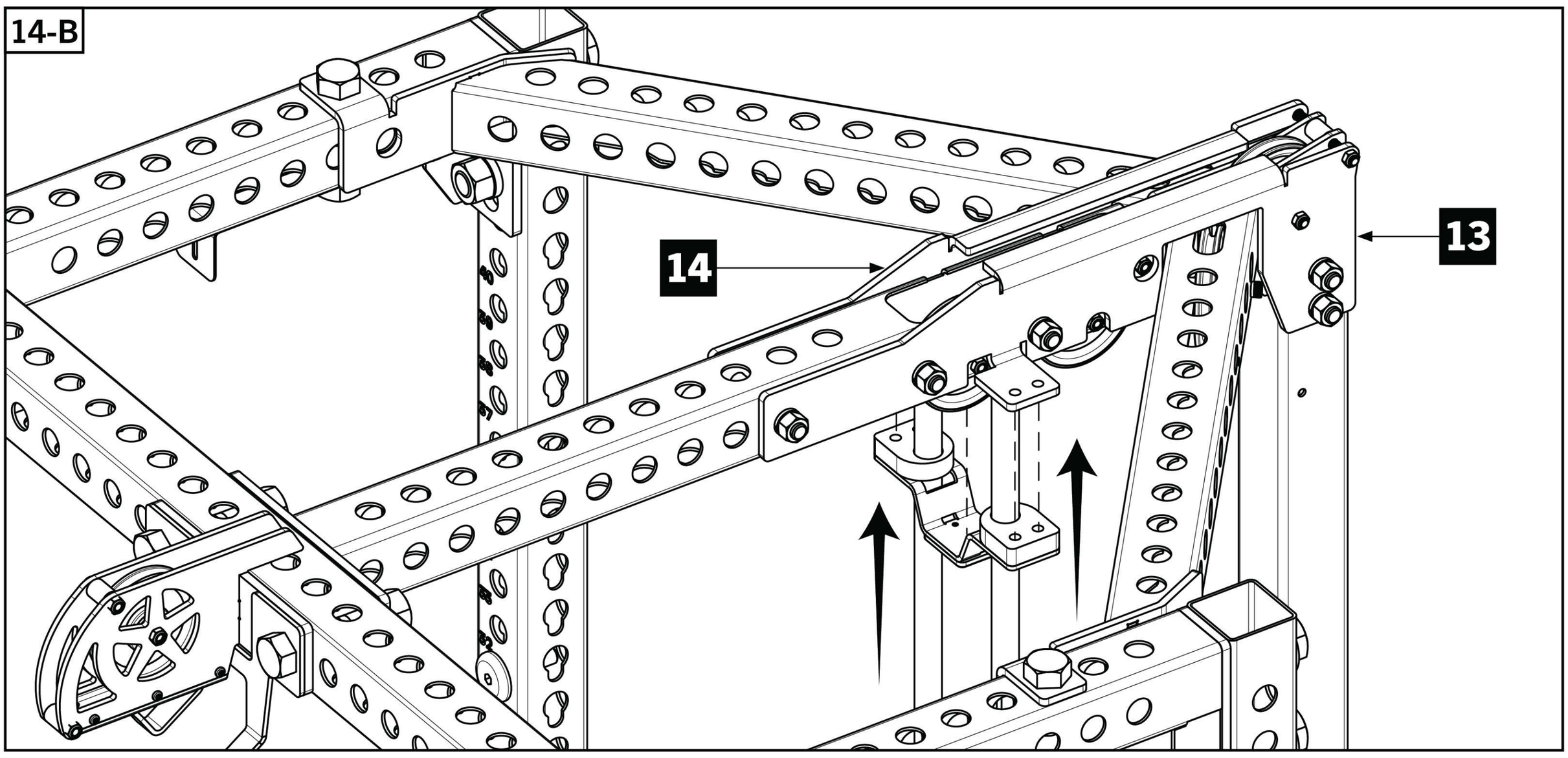

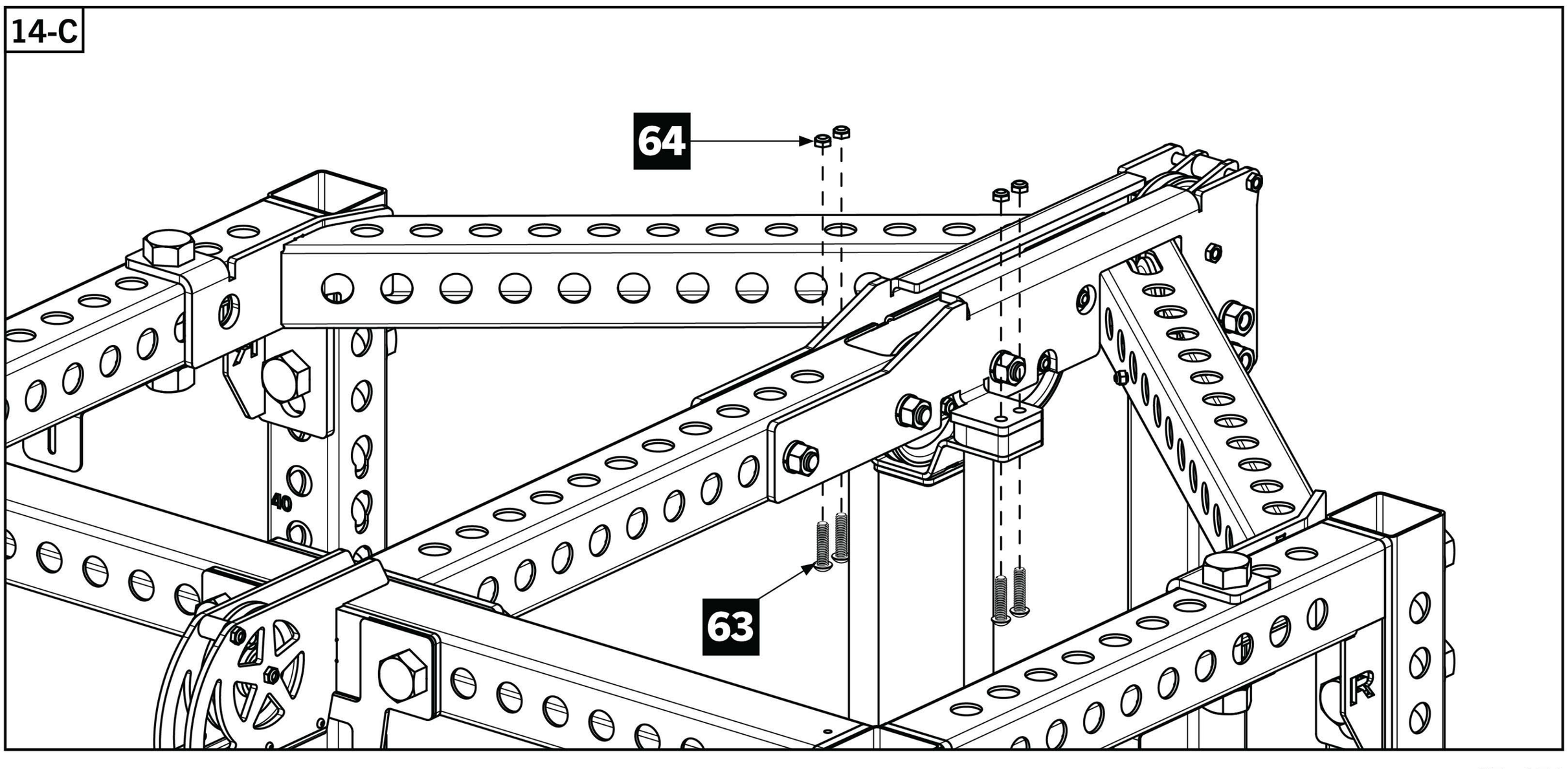

STEP 15

- **15-A**: Bolt Top Side Pulley Assembly - RH [**28**] and -LH [**29**] to the 24” Top Crossmembers [**4**] using 1” x 5” Hex Bolts [**49**], 1” x 3/8” Pulley Bracket Spacers [**51**], 1” Flat Washers [**52**], 1” Lock Washers [**53**], and 1” Hex Nuts [**54**] as shown.
- **Tip:** it is easiest to assemble this step by inserting the front hardware first and then swinging the back of Side Pulley Assemblies up to install the rear hardware.
- **15-B**: Bolt Bottom Side Pulley Assembly - RH [**30**] and -LH [**31**] to the 24” Low Crossmembers [**5**] using same hardware as above. Ensure hardware is installed through holes 4 and 9.

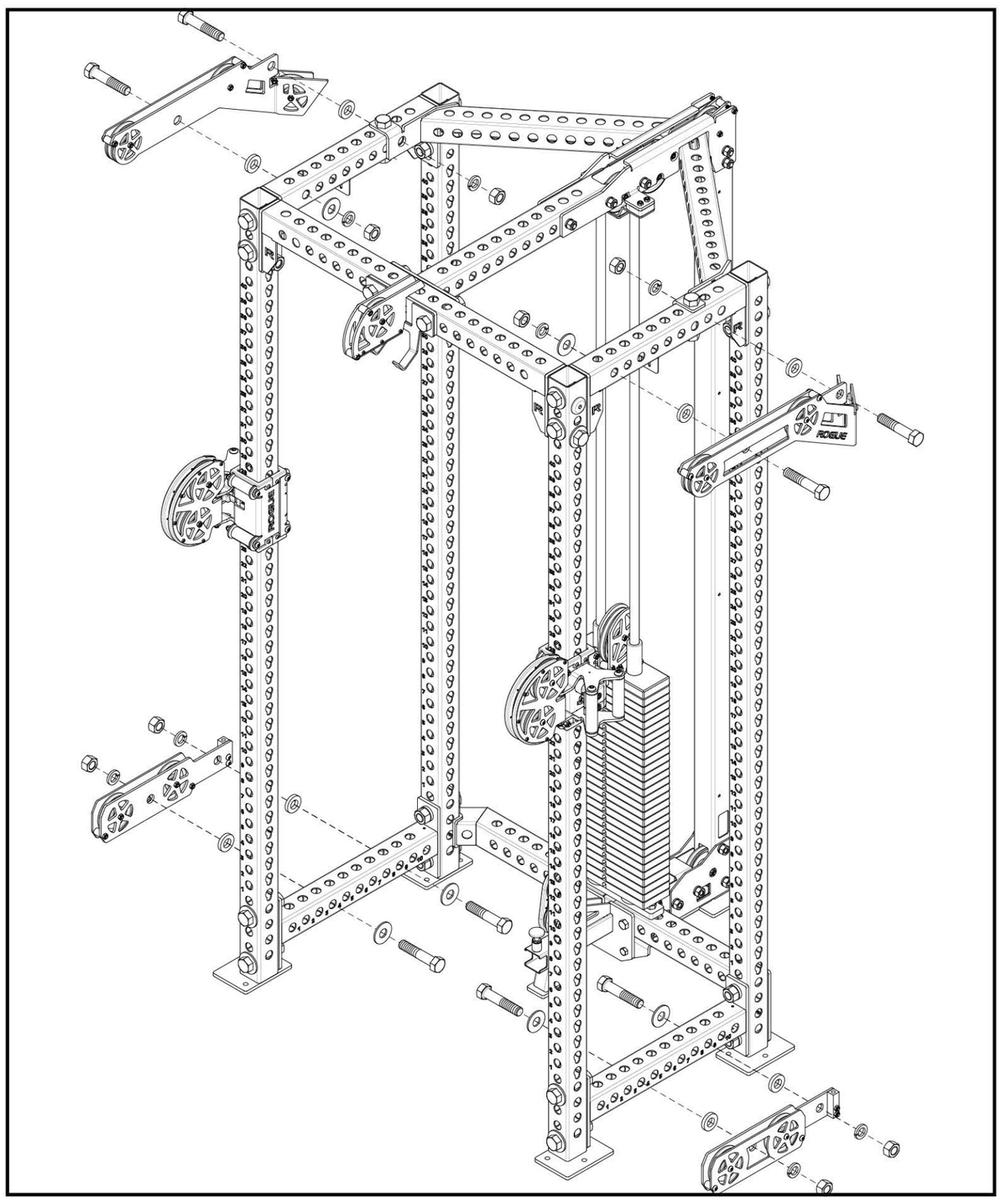

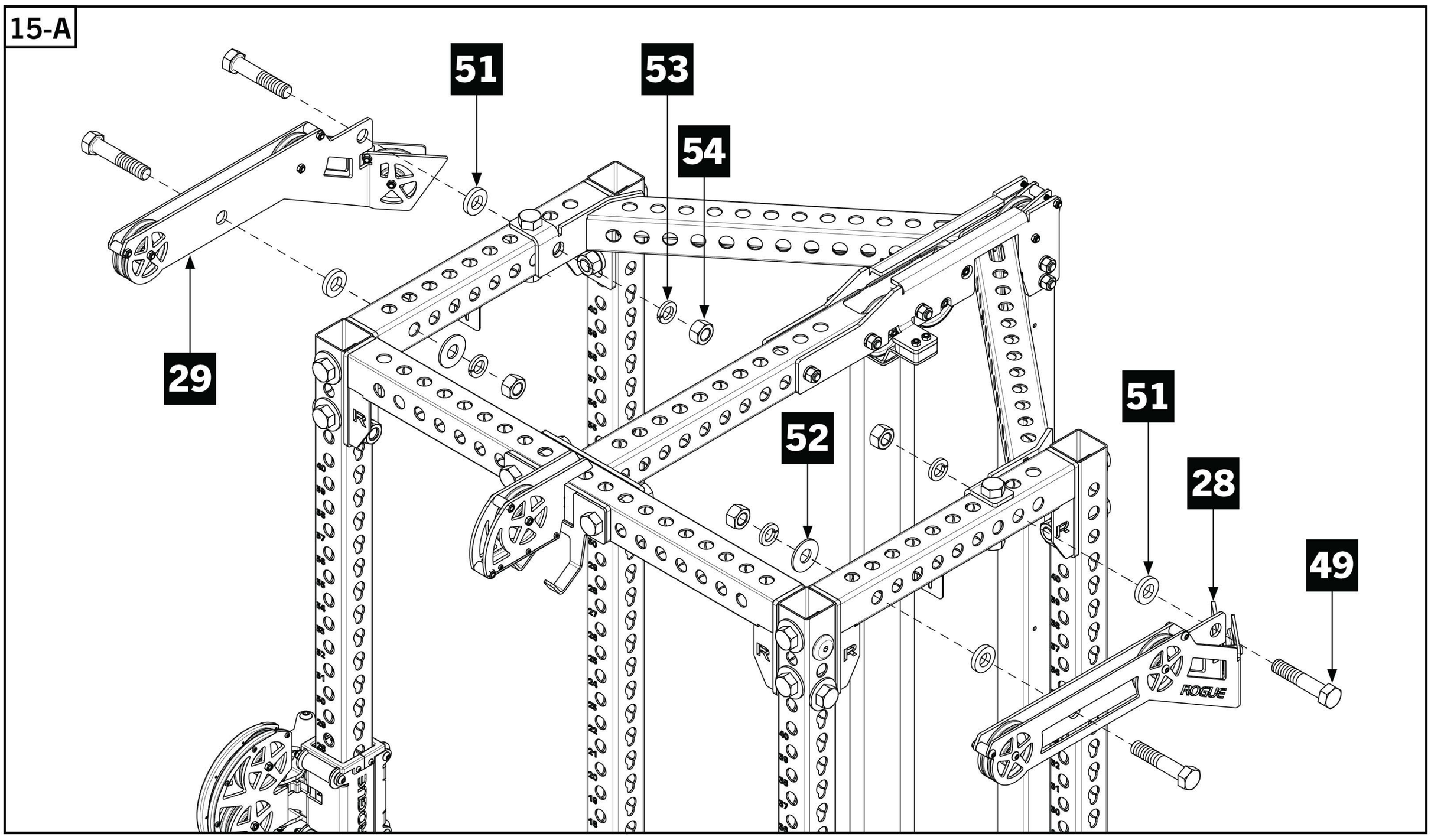

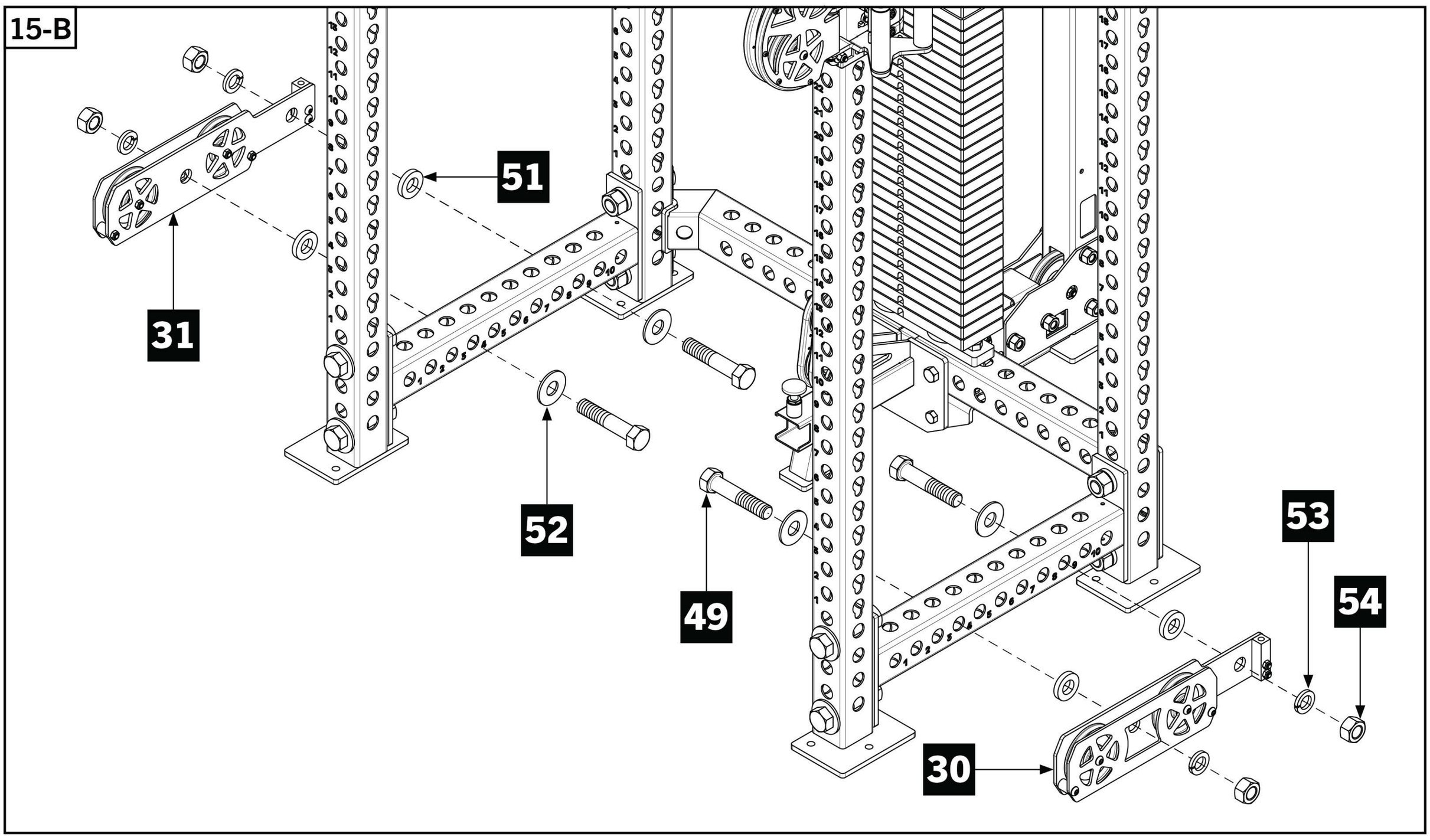

STEP 16

Note:

- Completely unwind and straighten out Trolley/Trolley Cable [**37**] to remove any twists/kinks prior to installation.
- The blue arrows shown in **STEP 16** through **STEP 21** indicate directions for assembling the Trolley/Trolley Cable and correspond with the blue tag on the Ball End of cable.
- Feed the Ball End of Trolley/Trolley Cable [**37**] between the two pulleys inside Swivel Trolley RH [**7**] and continue upward.
- Feed the cable around pulley inside the Top Side Pulley Assembly - RH [**28**] and continue toward the back of the rack.
- Feed cable around the second pulley on the Side Pulley Assembly and then downward.

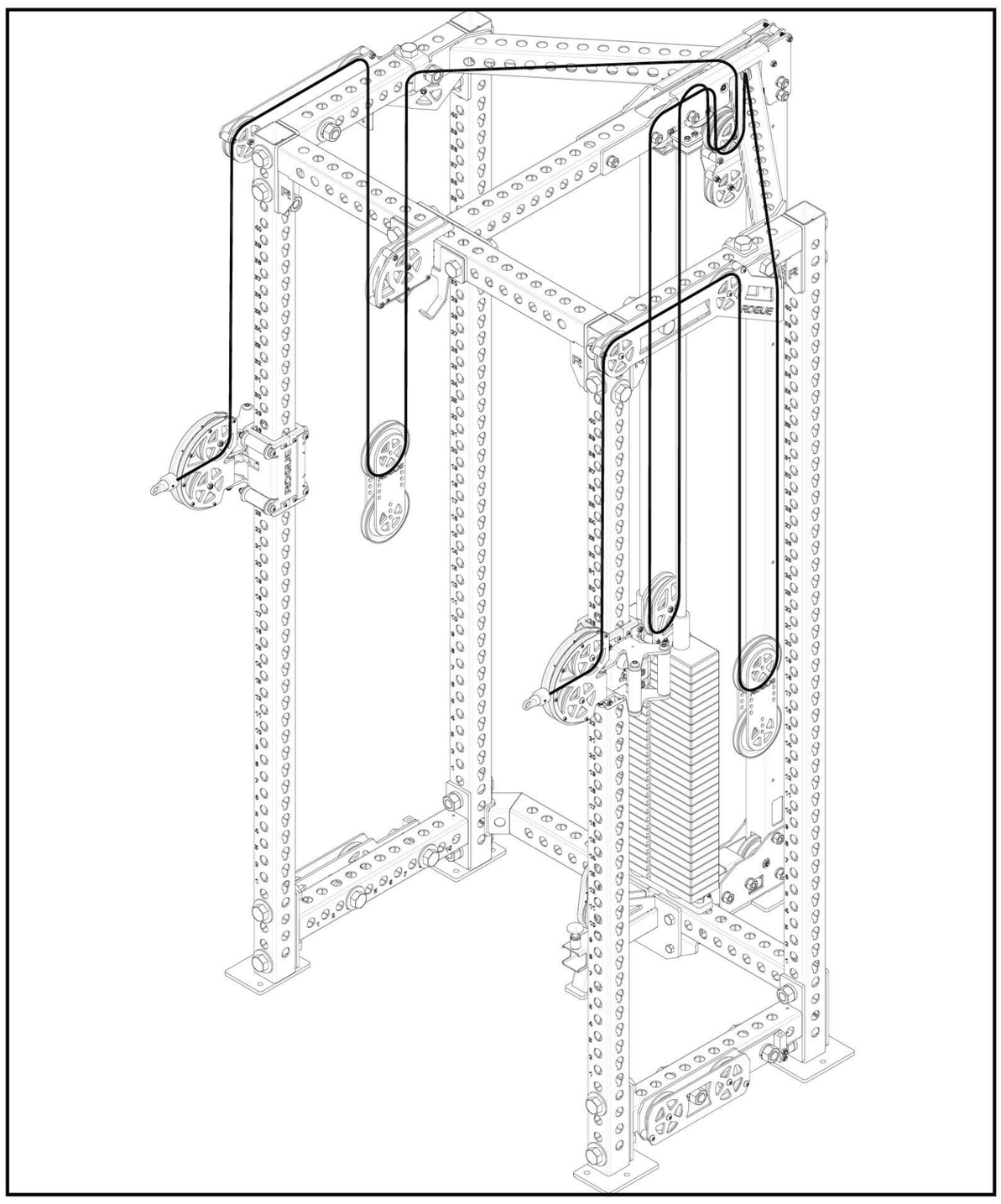

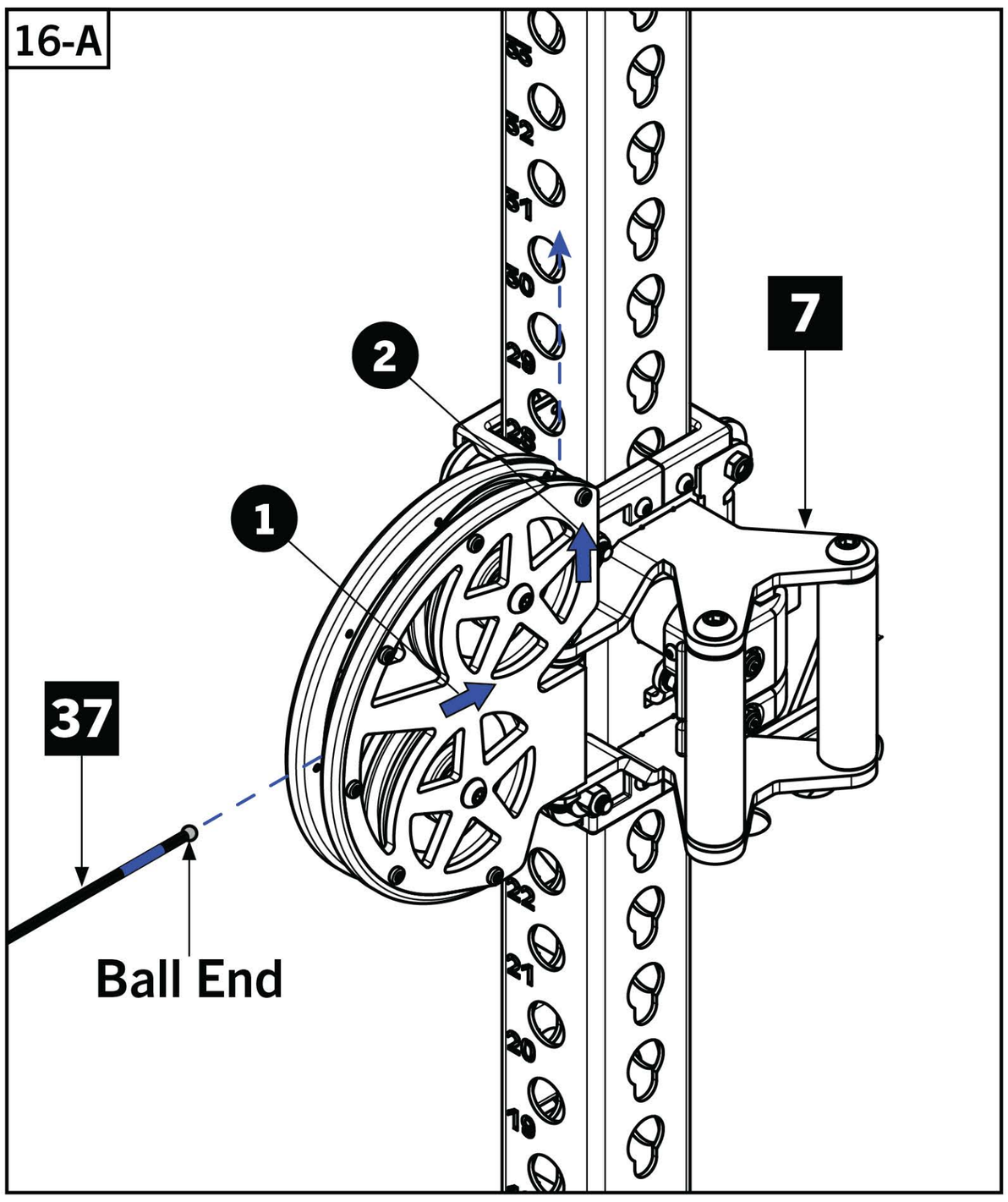

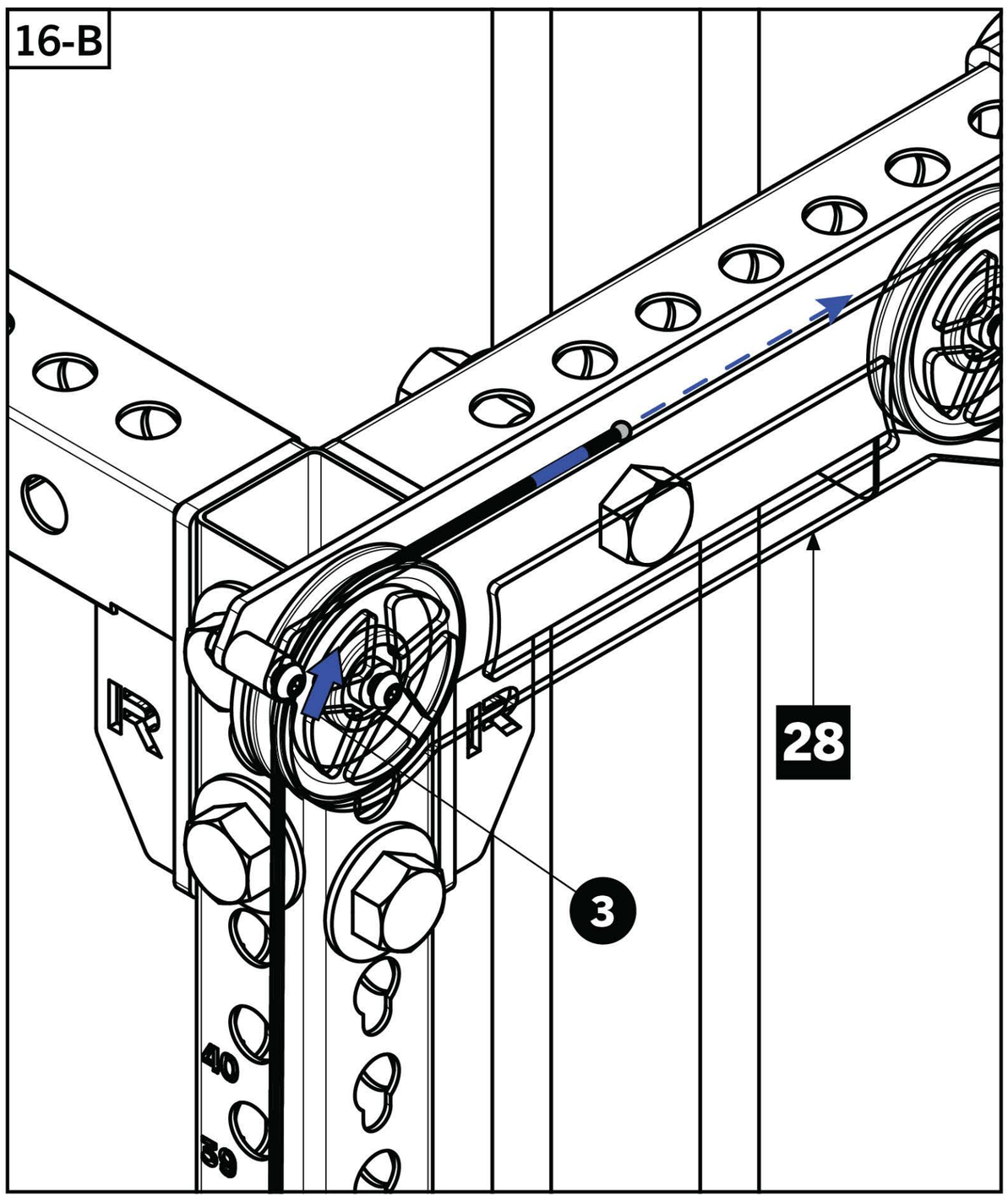

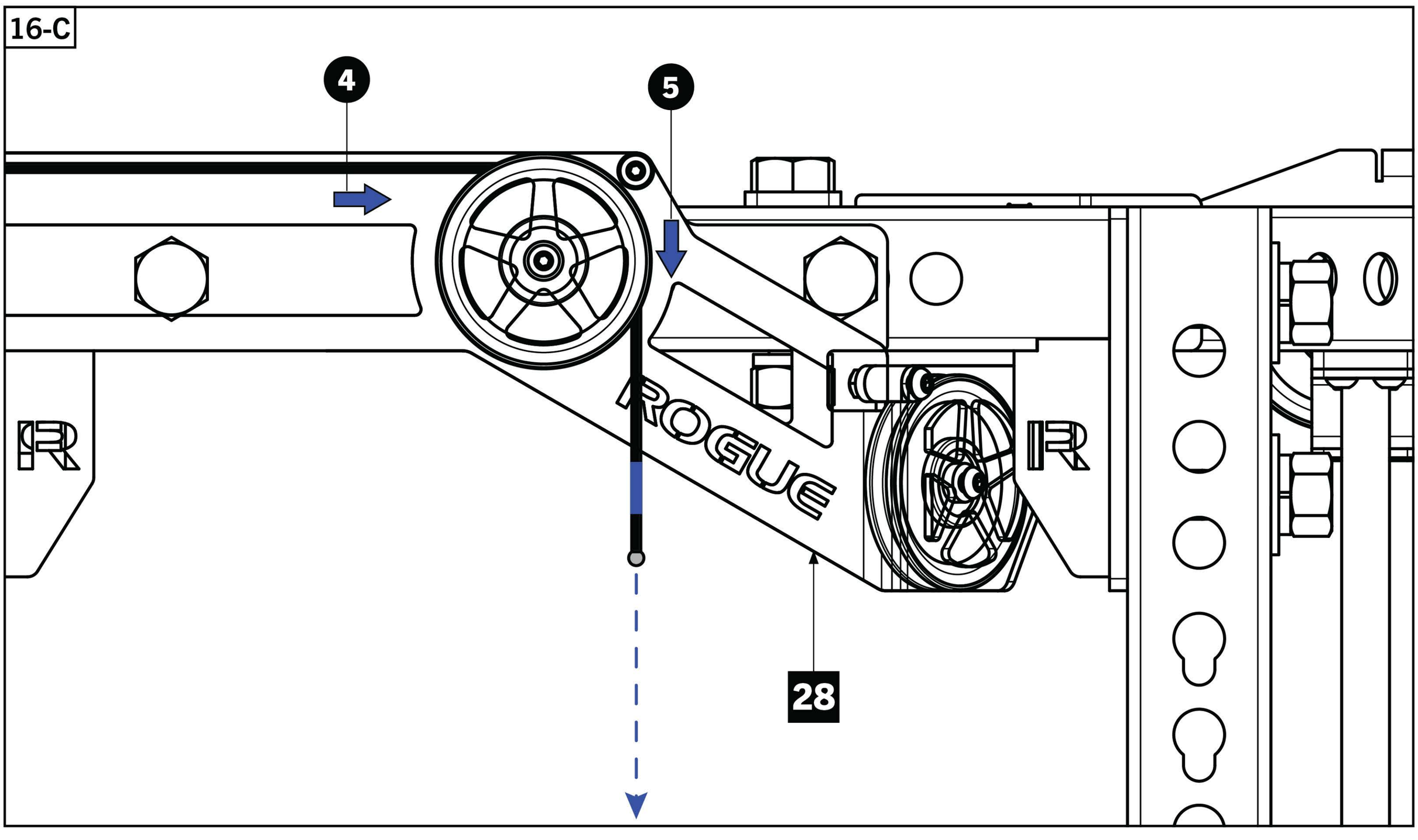

STEP 17

- Hold one Side Peanut Pulley [**33**] in the air, ensuring the arrow stickers correspond to diagram **17-A.**
- Feed the cable down and around the upper pulley of Side Peanut Pulley and then back up towards the Top Side Pulley Assembly - RH [**28**].
- Feed cable around the angled pulley shown in **17-B** and continue towards the Rear 3X3 Upright [**2**].

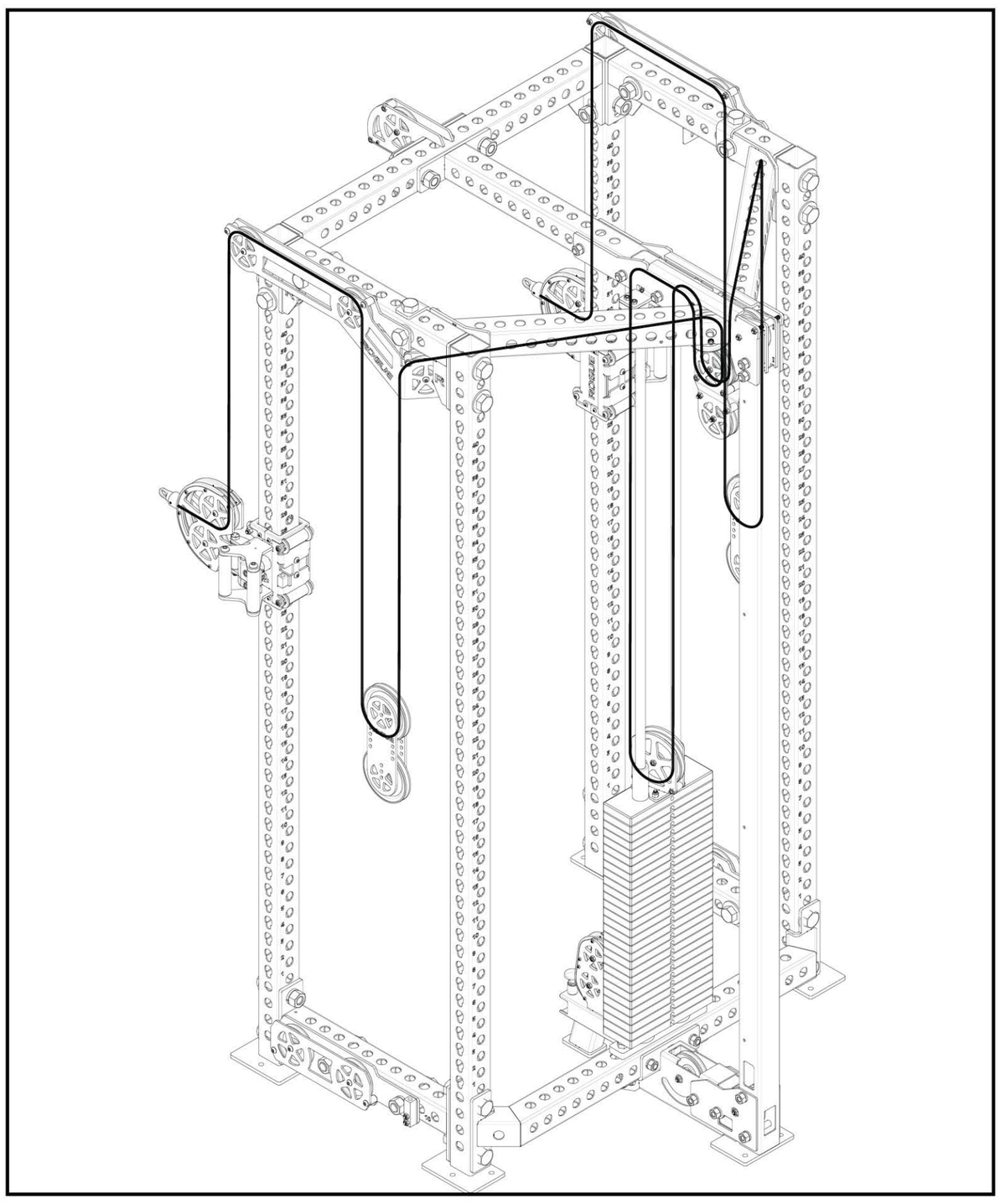

17-A

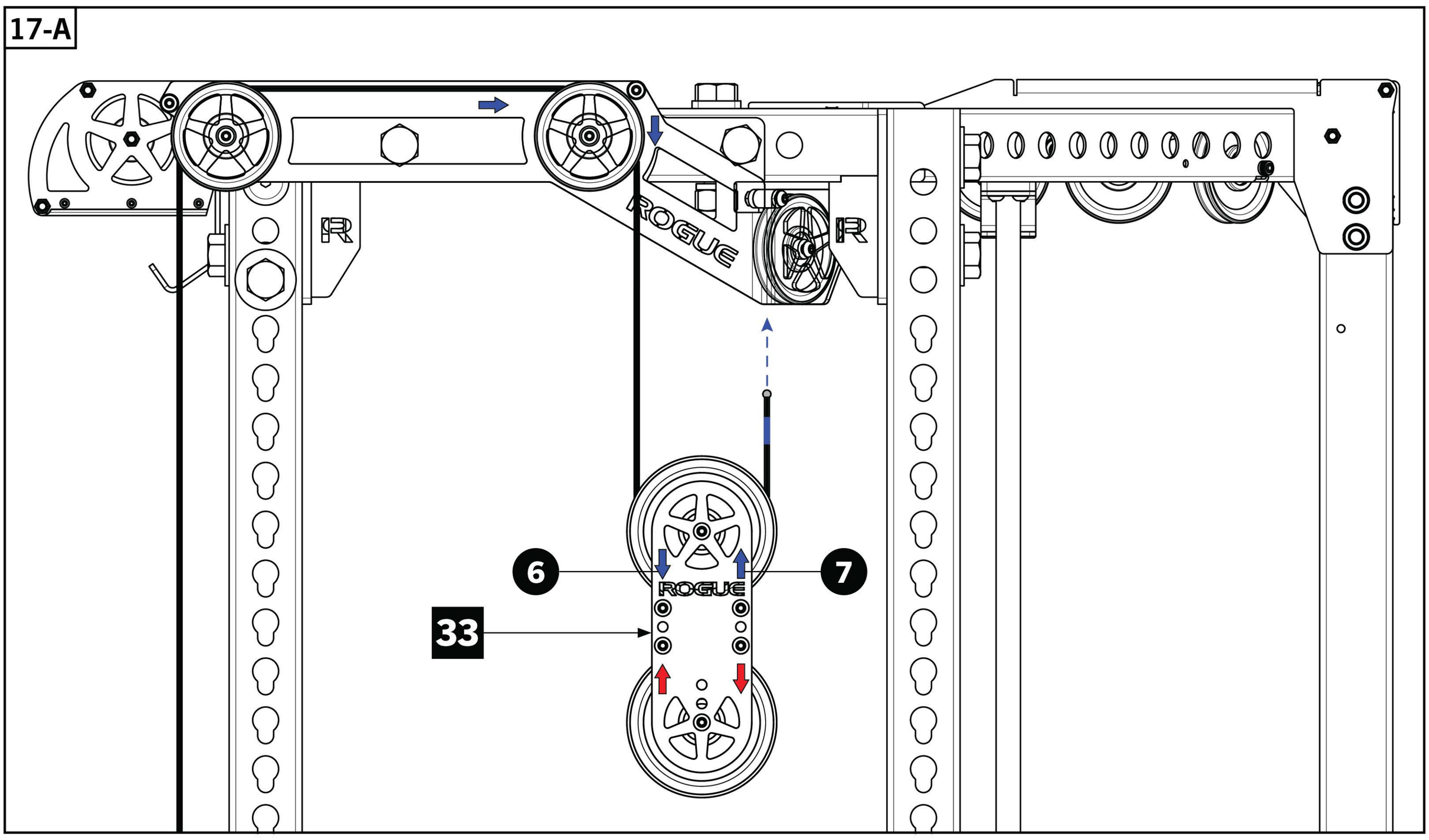

17-B

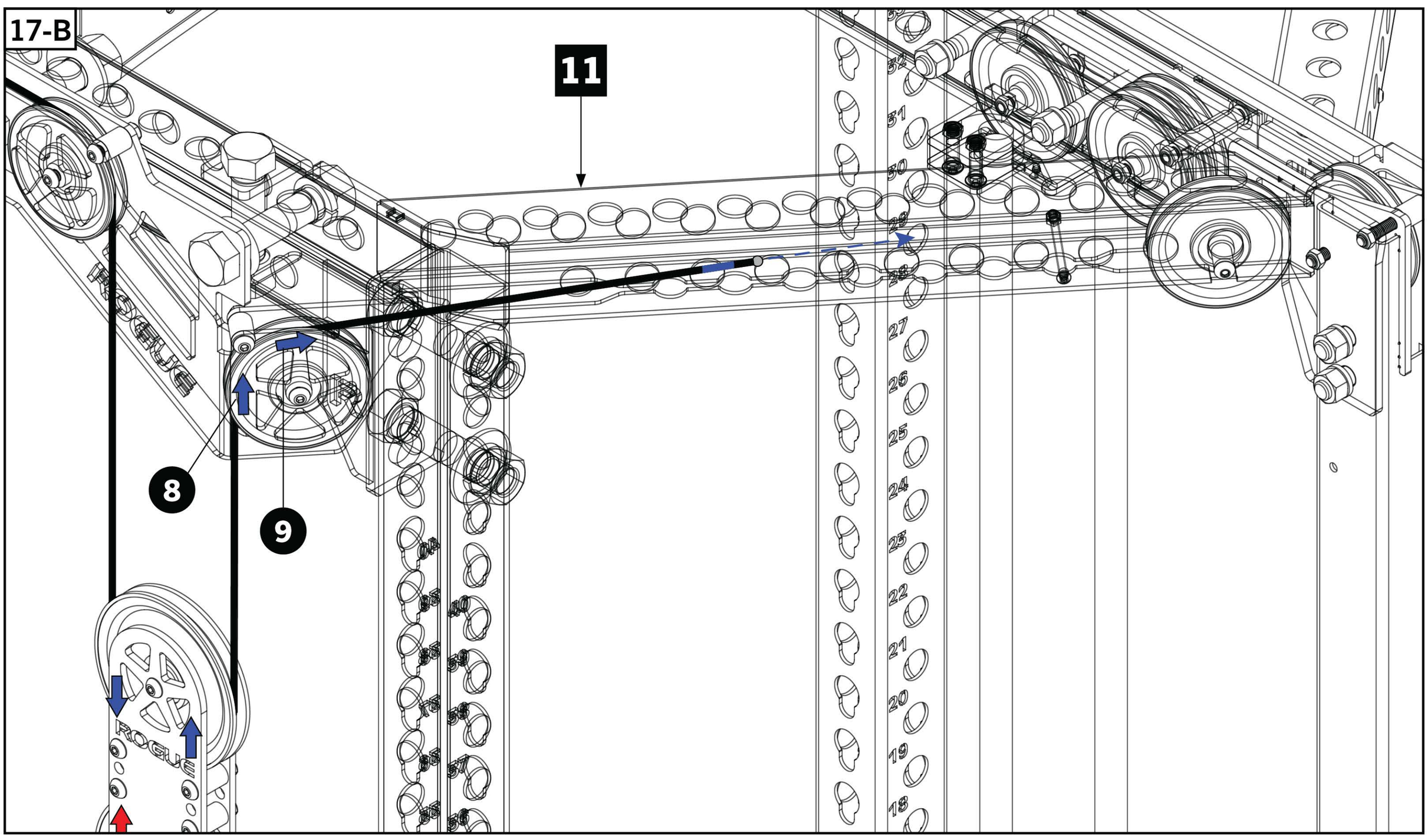

STEP 17

- Hold one Side Peanut Pulley [**33**] in the air, ensuring the arrow stickers correspond to diagram **17-A.**
- Feed the cable down and around the upper pulley of Side Peanut Pulley and then back up towards the Top Side Pulley Assembly - RH [**28**].
- Feed cable around the angled pulley shown in **17-B** and continue towards the Rear 3X3 Upright [**2**].

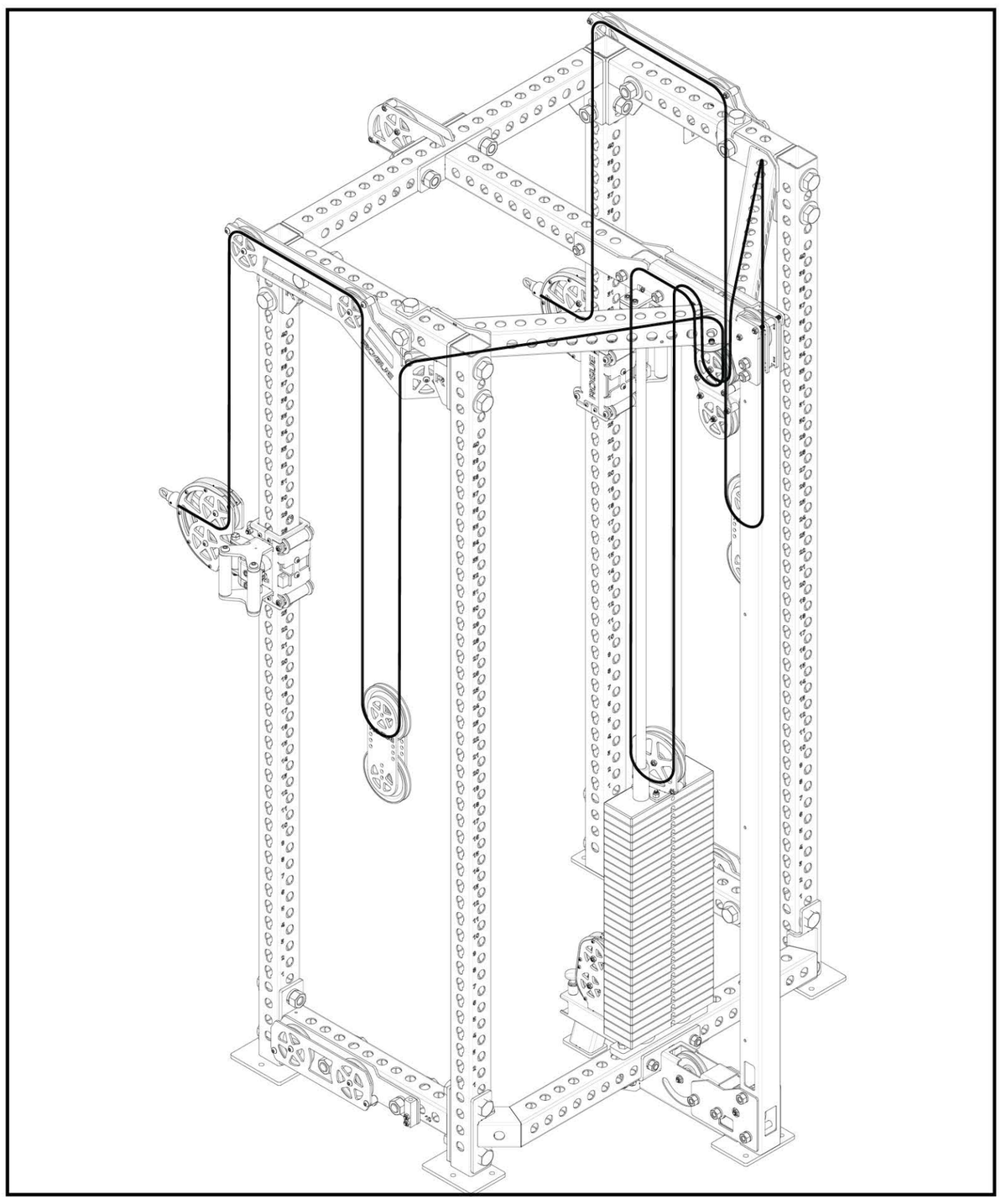

17-A

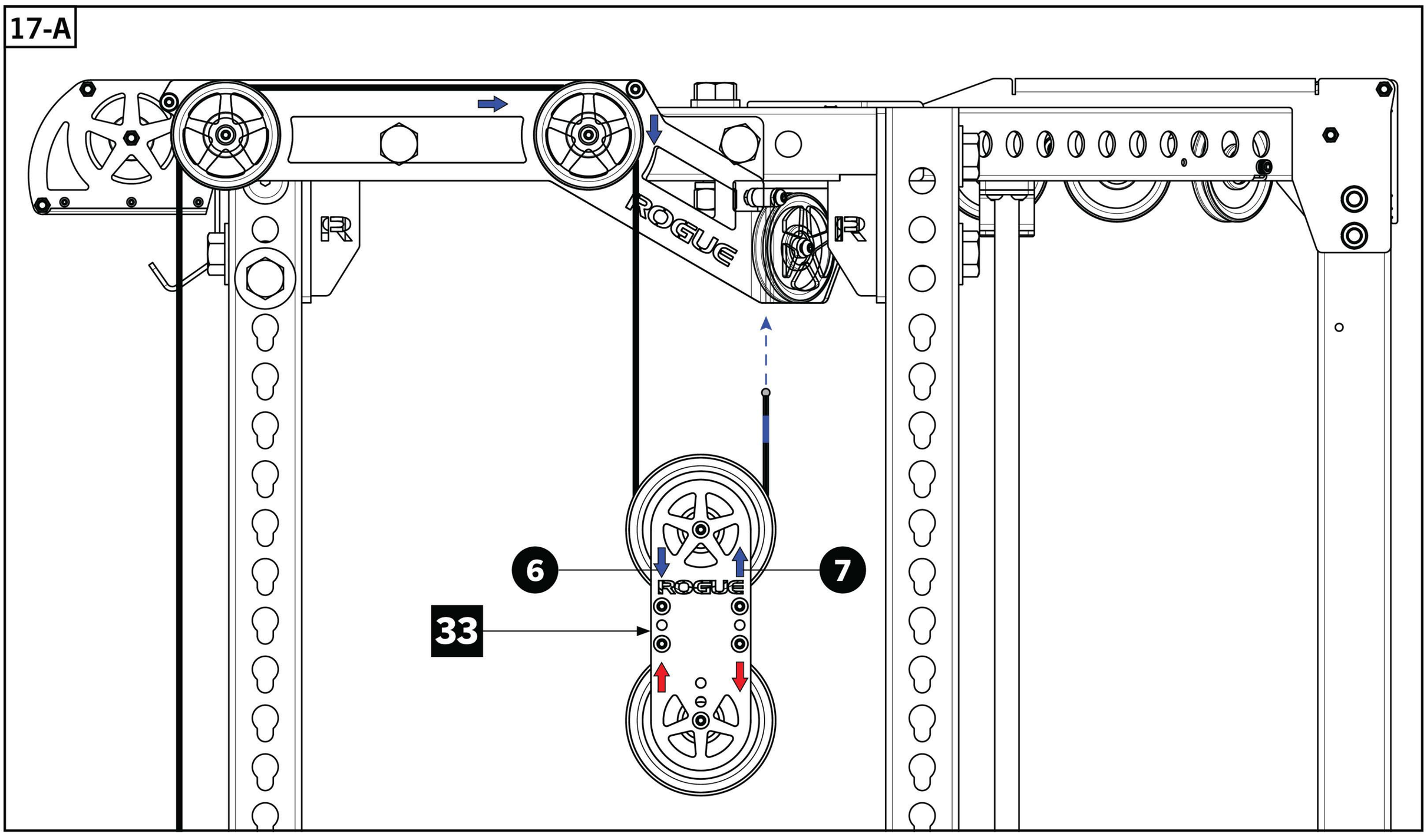

17-B

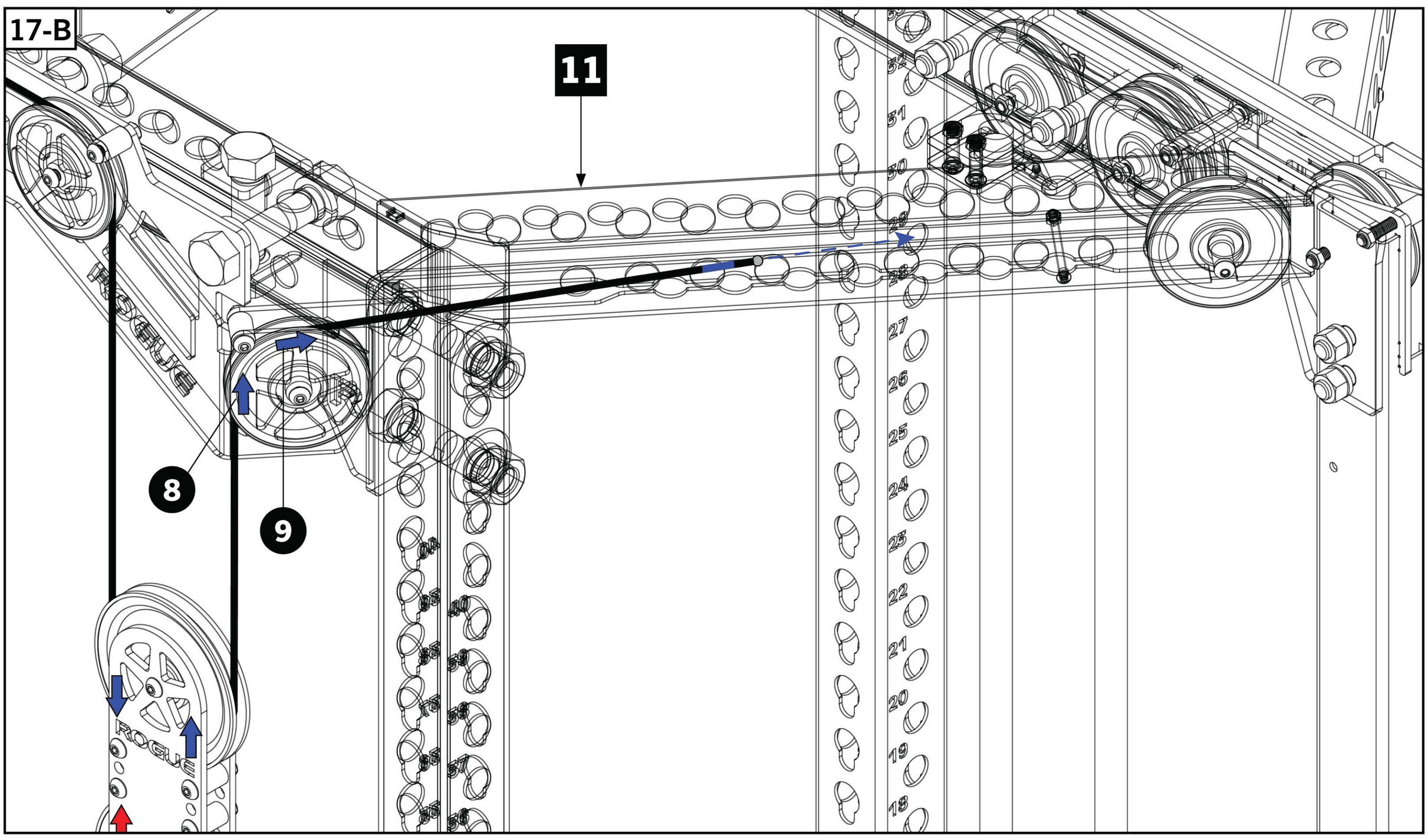

STEP 19

- Continuing down towards the Weight Stack, feed cable around the large 6.5” Pulley located on top of the Weight Stack Stem. **Tip:** a flathead screwdriver may be used to help guide cable through turn 18.
- Feed cable back up to the Top Center Crossmember, feeding around the pulley shown in **19-B** and then immediately back down towards the Rear Peanut Pulley [**32**].
- Continue around the other Top Pulley on the peanut and then back up and around the pulley shown in the Rear Angled Cross-member - LH [**12**].
- Continue around the next angled pulley located in the Top Side Pulley Assembly - LH [**29**] and then downward.

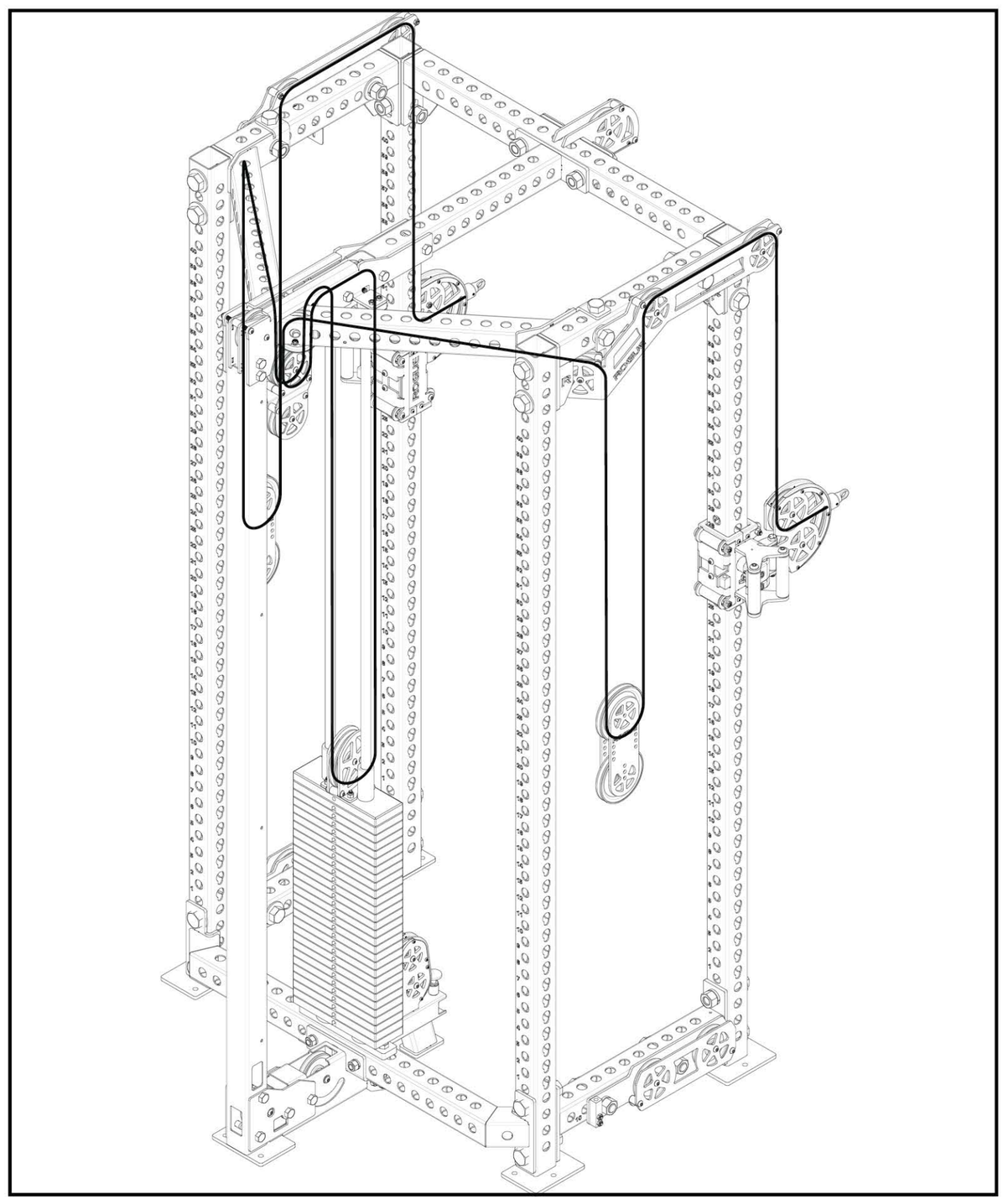

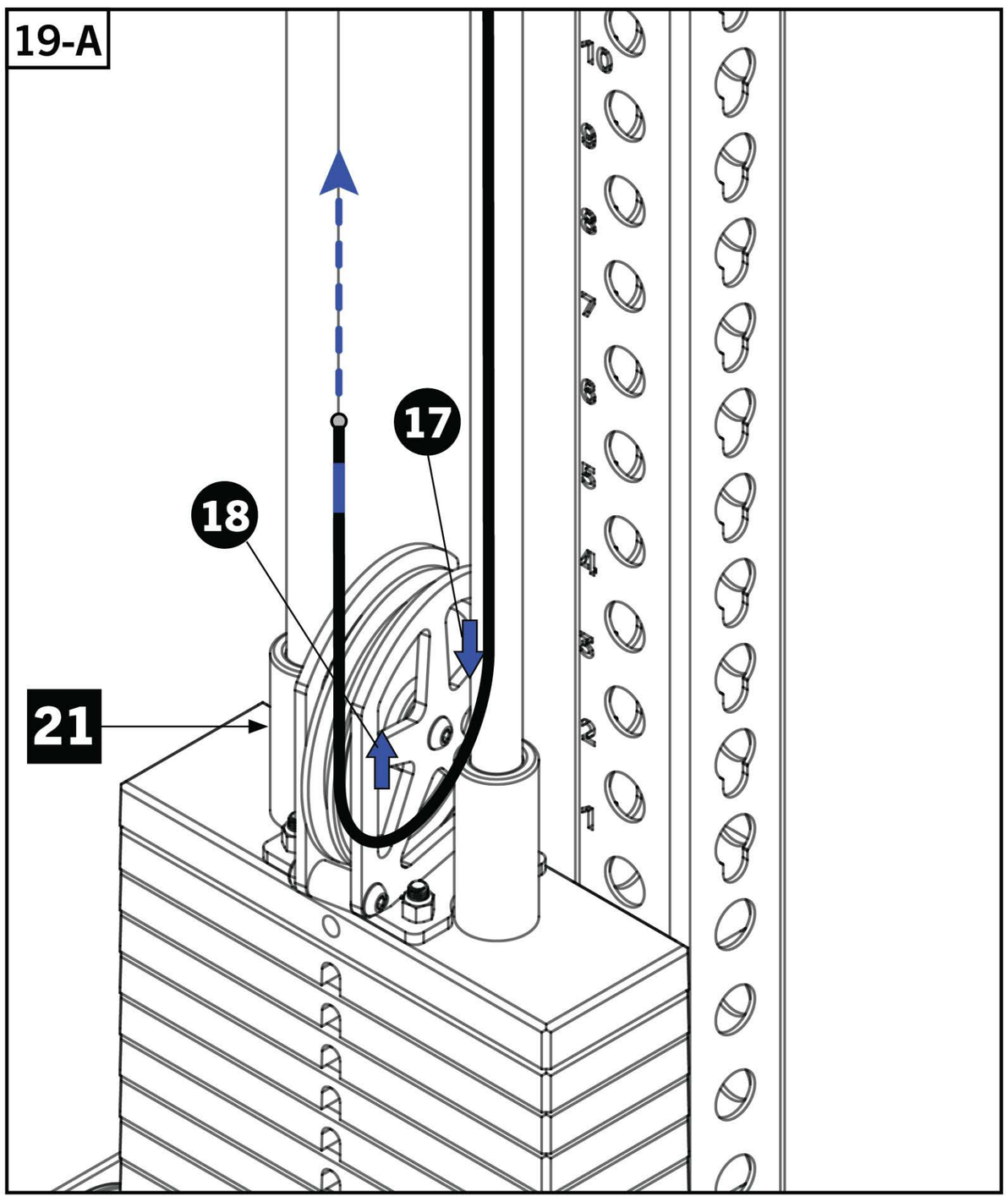

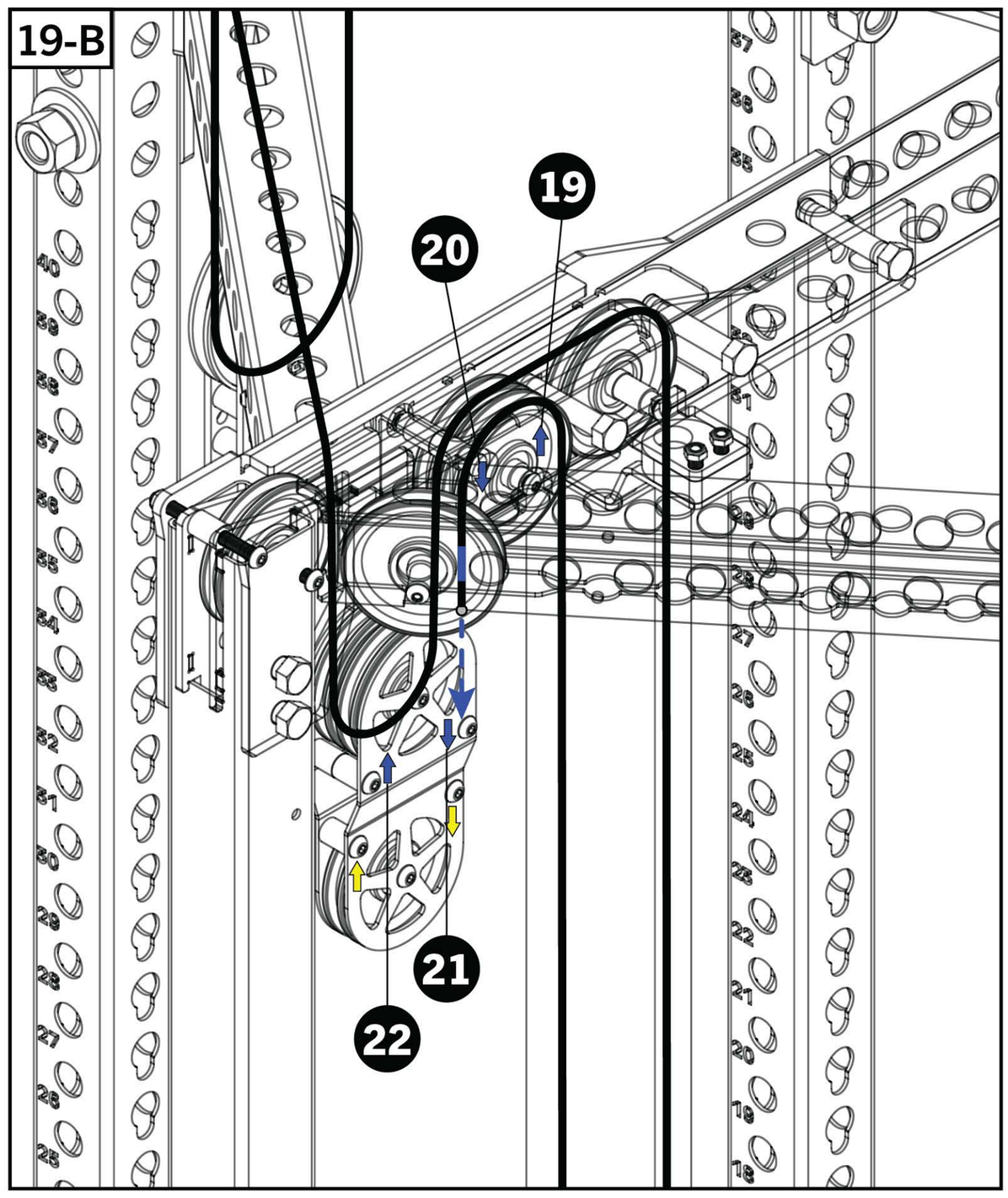

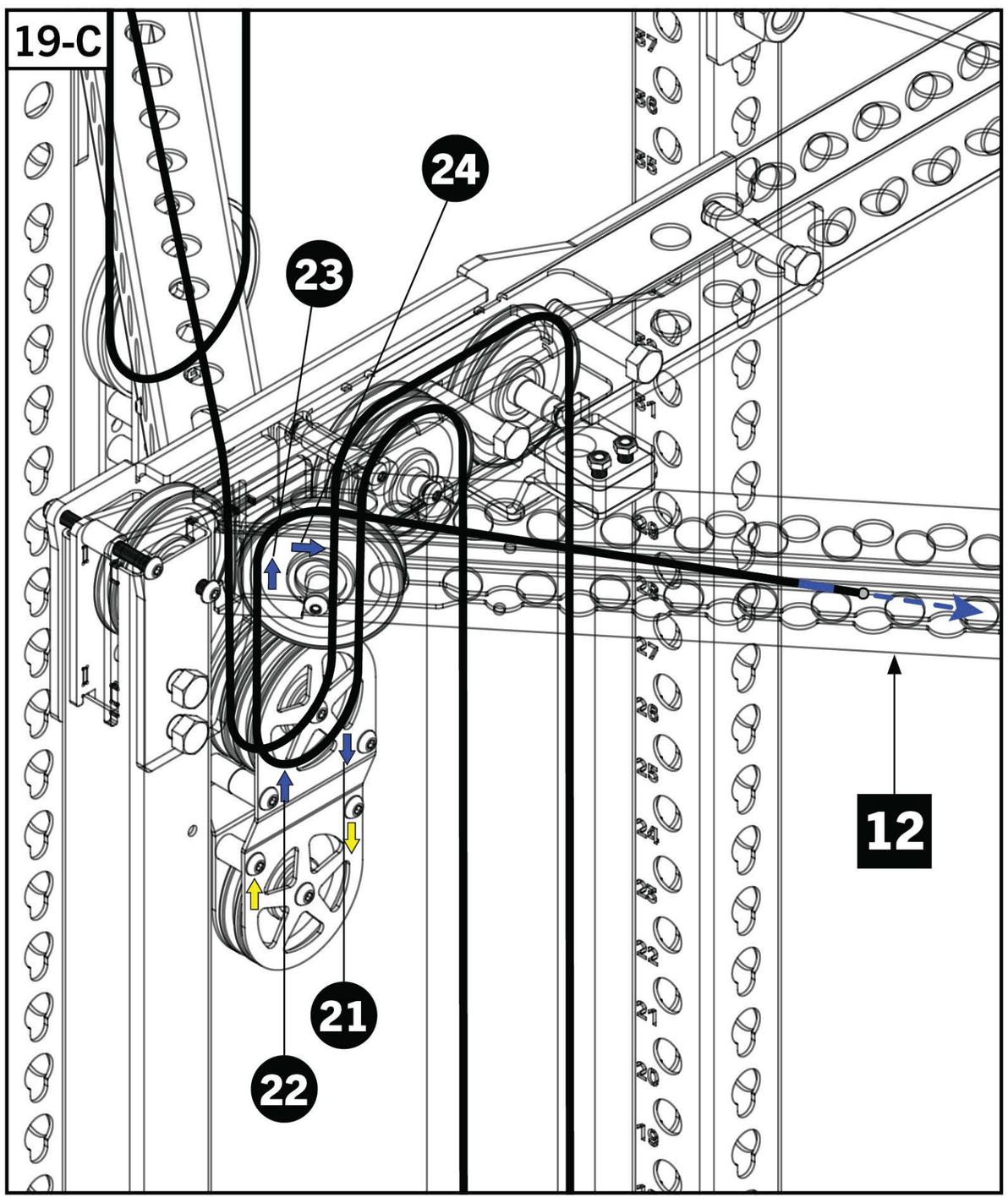

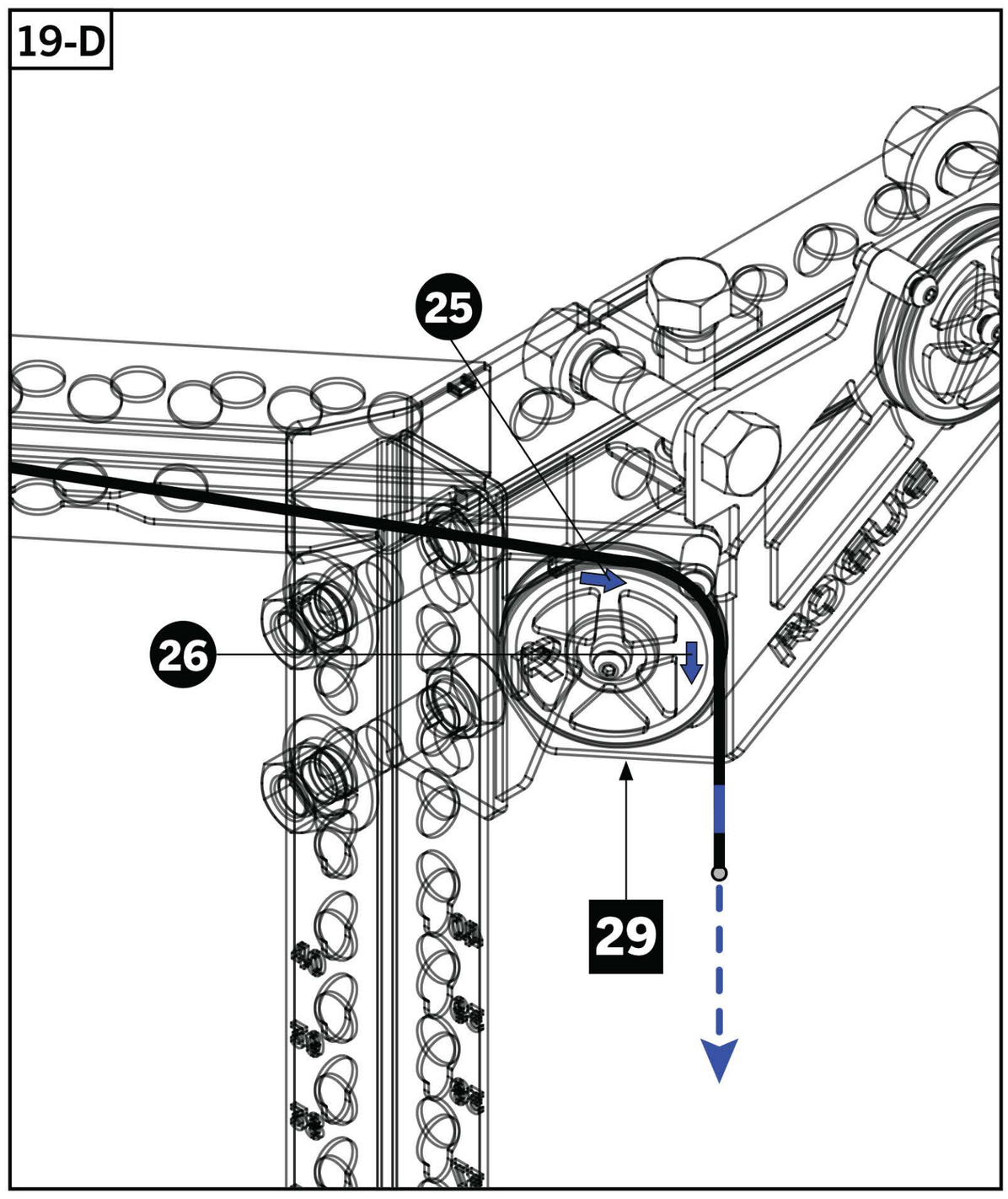

STEP 20

- Hold the remaining Side Peanut Pulley [**33**] in the air, ensuring the arrows correspond to diagram **20-A**.
- Feed cable down around the upper peanut pulley and then back up towards the Top Side Pulley Assembly - LH.
- Feed around the pulley shown in **20-B** and then towards the front of the rack.
- Continue around the frontmost pulley on Top Side Pulley Assembly - LH [**29**], then down and out through the front of the Swivel Trolley LH [**8**].
- Pull Ball End of cable out far enough to assemble Clevis on next step.

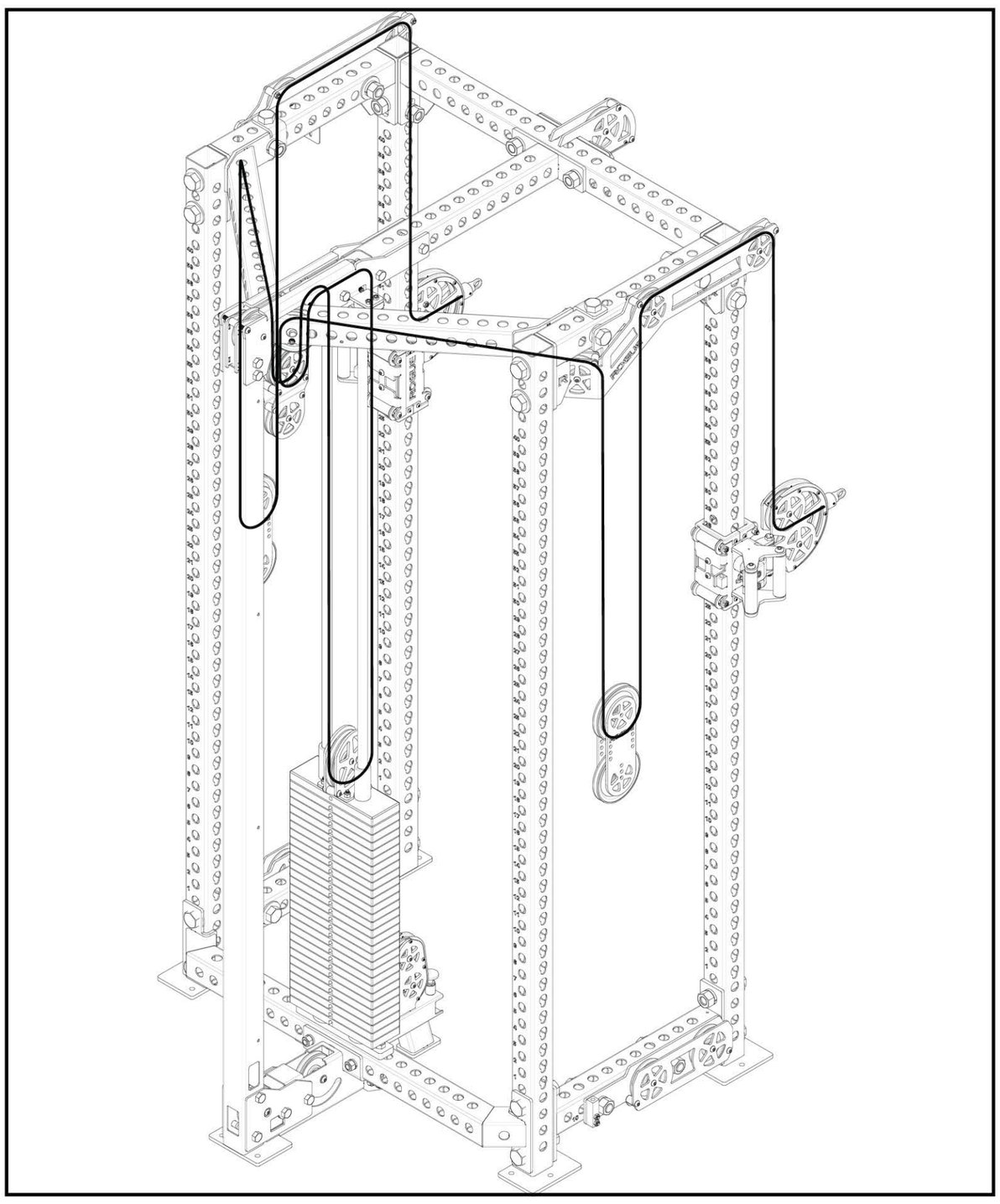

20-A

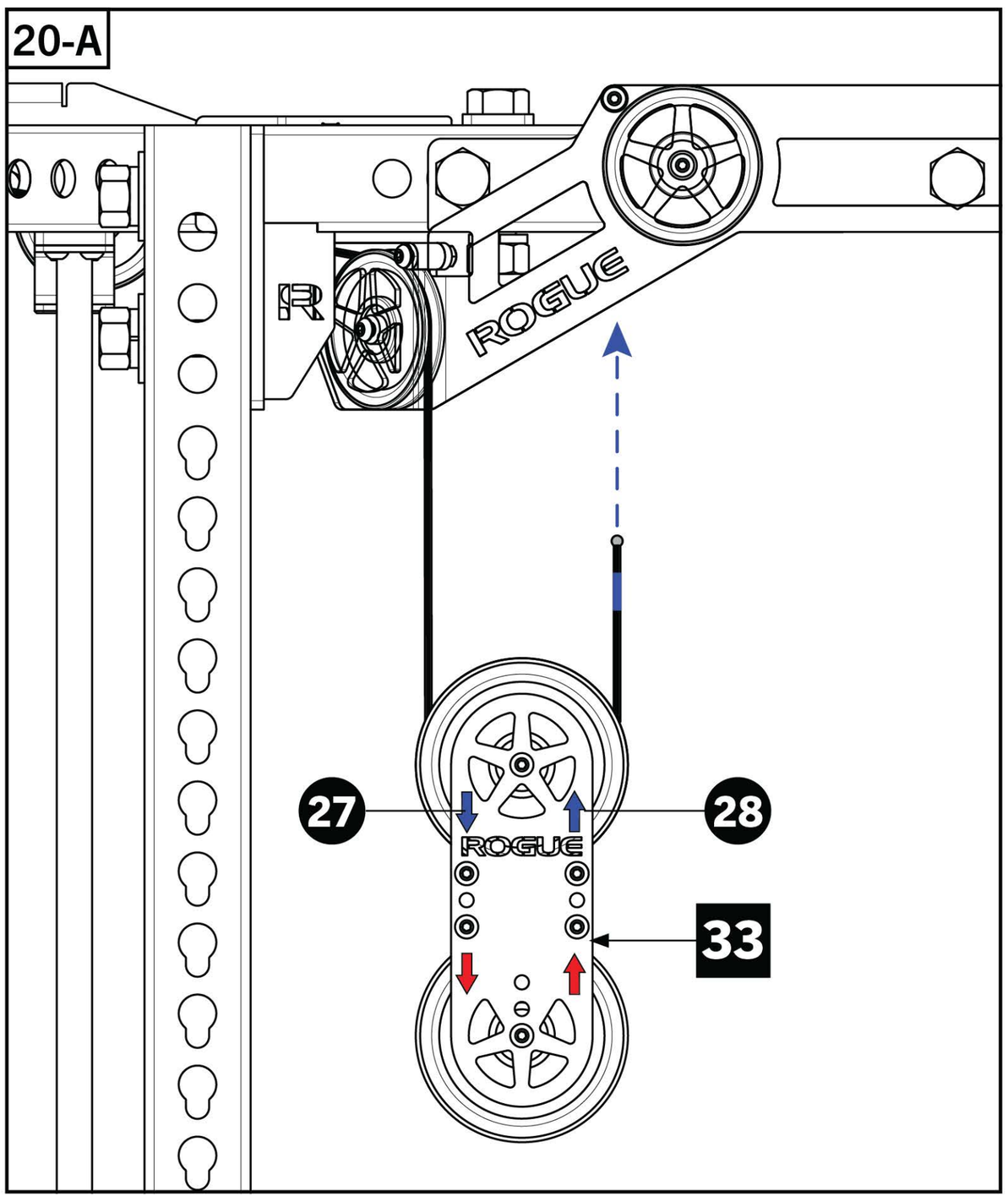

20-B

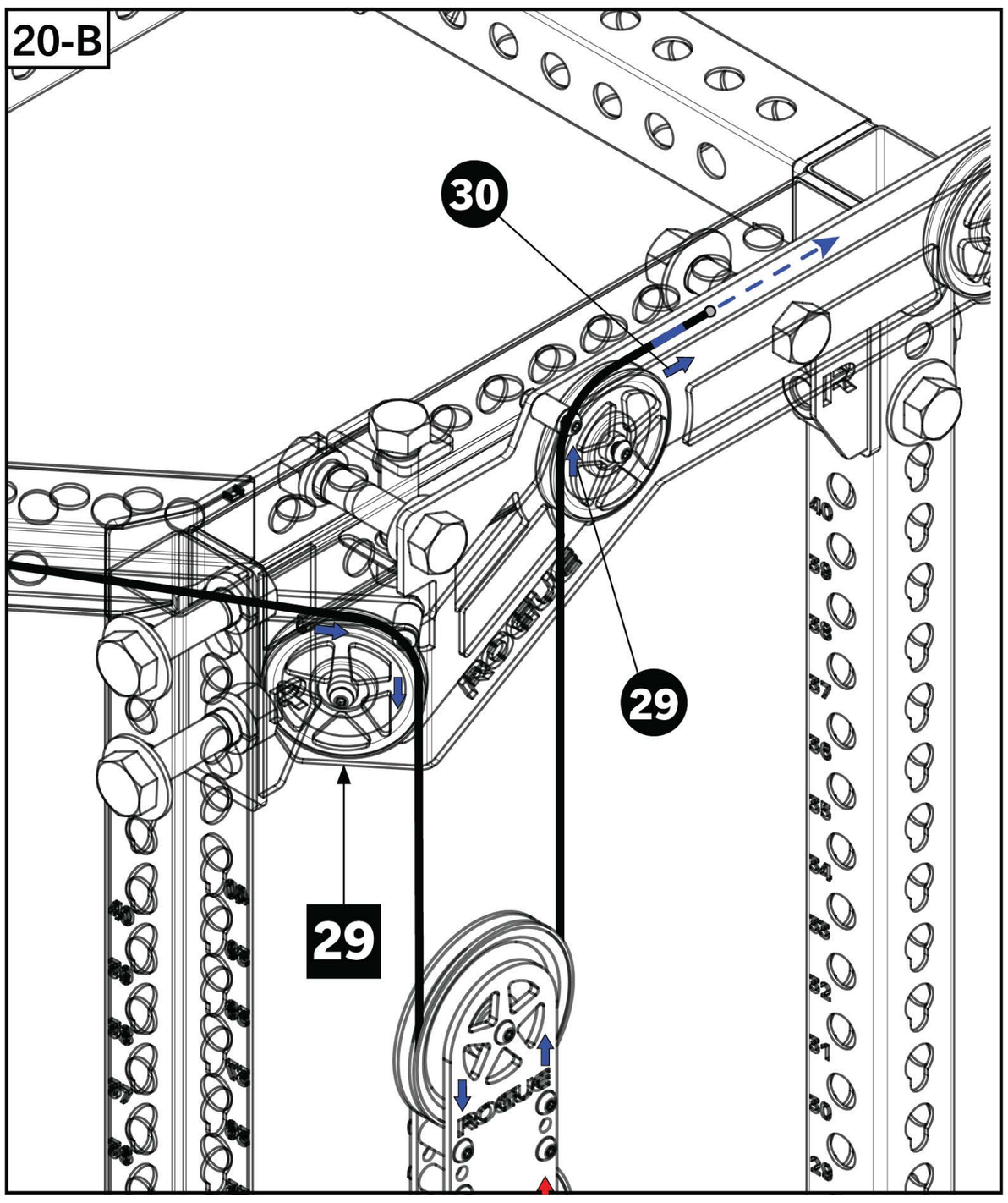

20-C

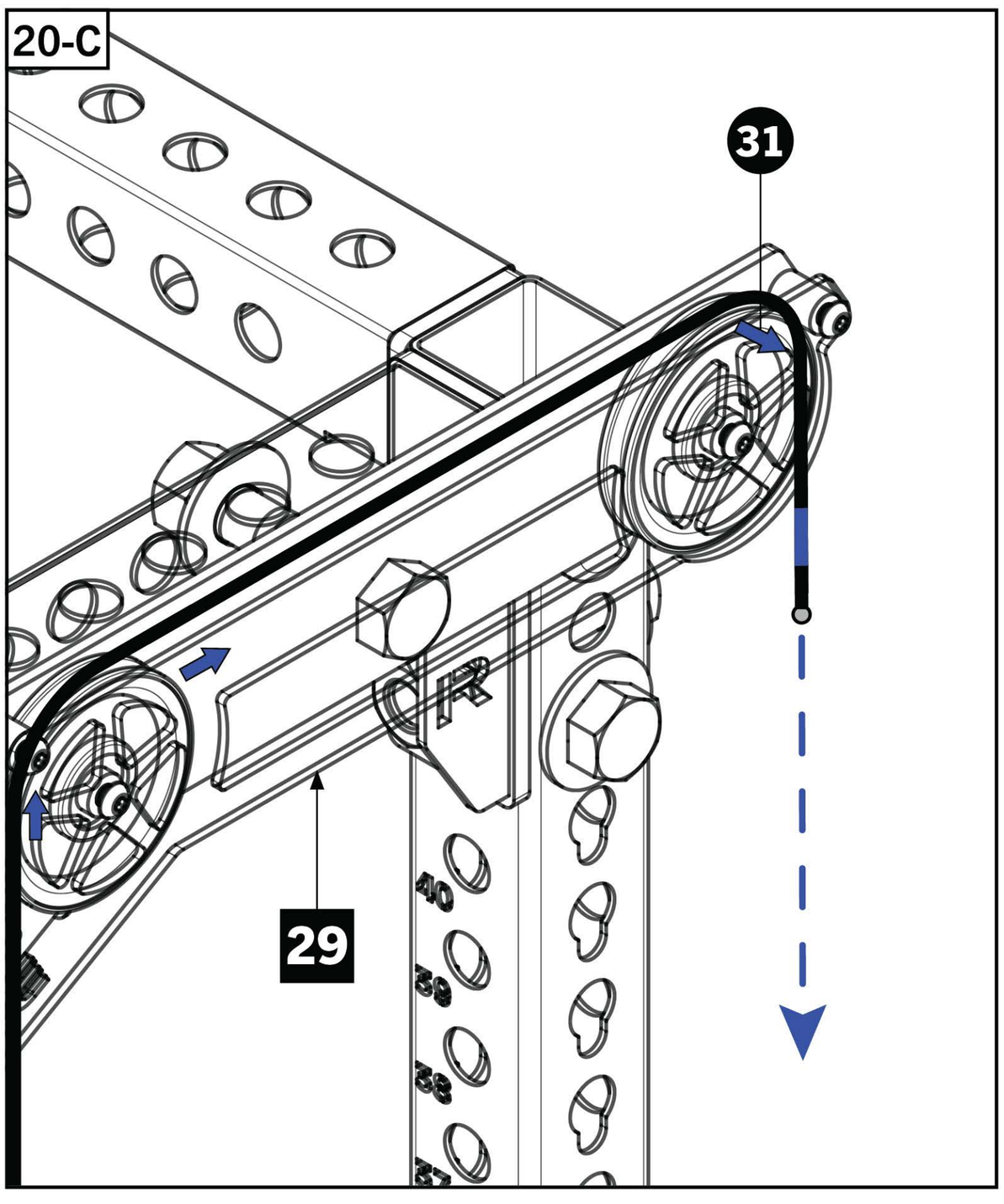

20-D

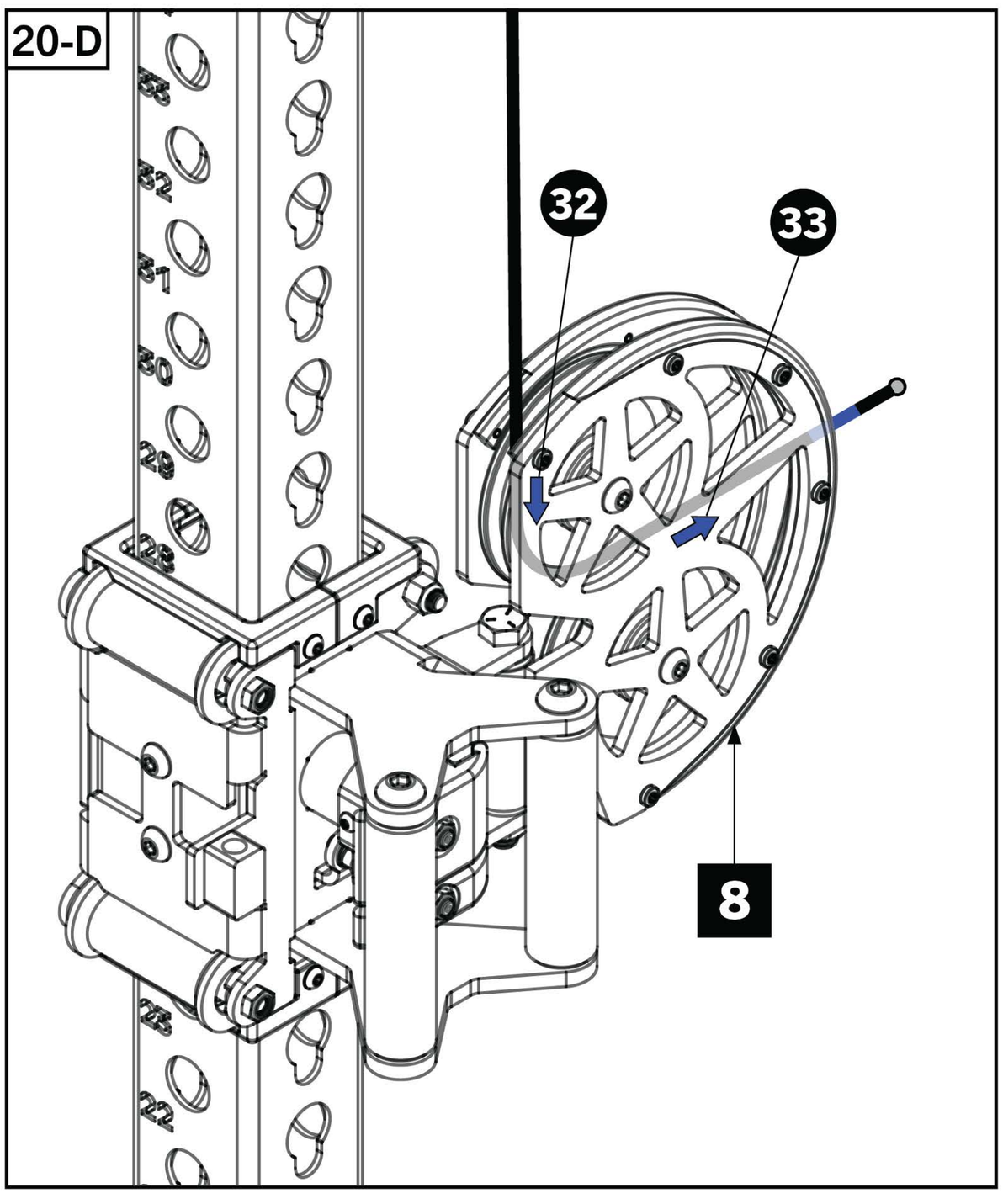

STEP 21

Tools Required:

- 3/32” Allen Key & 5/8” Wrench
- Completely disassemble the loose Clevis included with cable by unscrewing set screws and Split Threaded Insert, and remove blue tag on end of cable.
- Slide parts over the ball on cable as shown on **21-B.**
- Insert Grommet into non-threaded side of Split Threaded Insert and screw Clevis End on threaded side using 5/8” Wrench.
- Slide Plastic Stop forward and align outer holes with threaded holes on Clevis End and re-insert Set Screws. Fully tighten Set Screws.

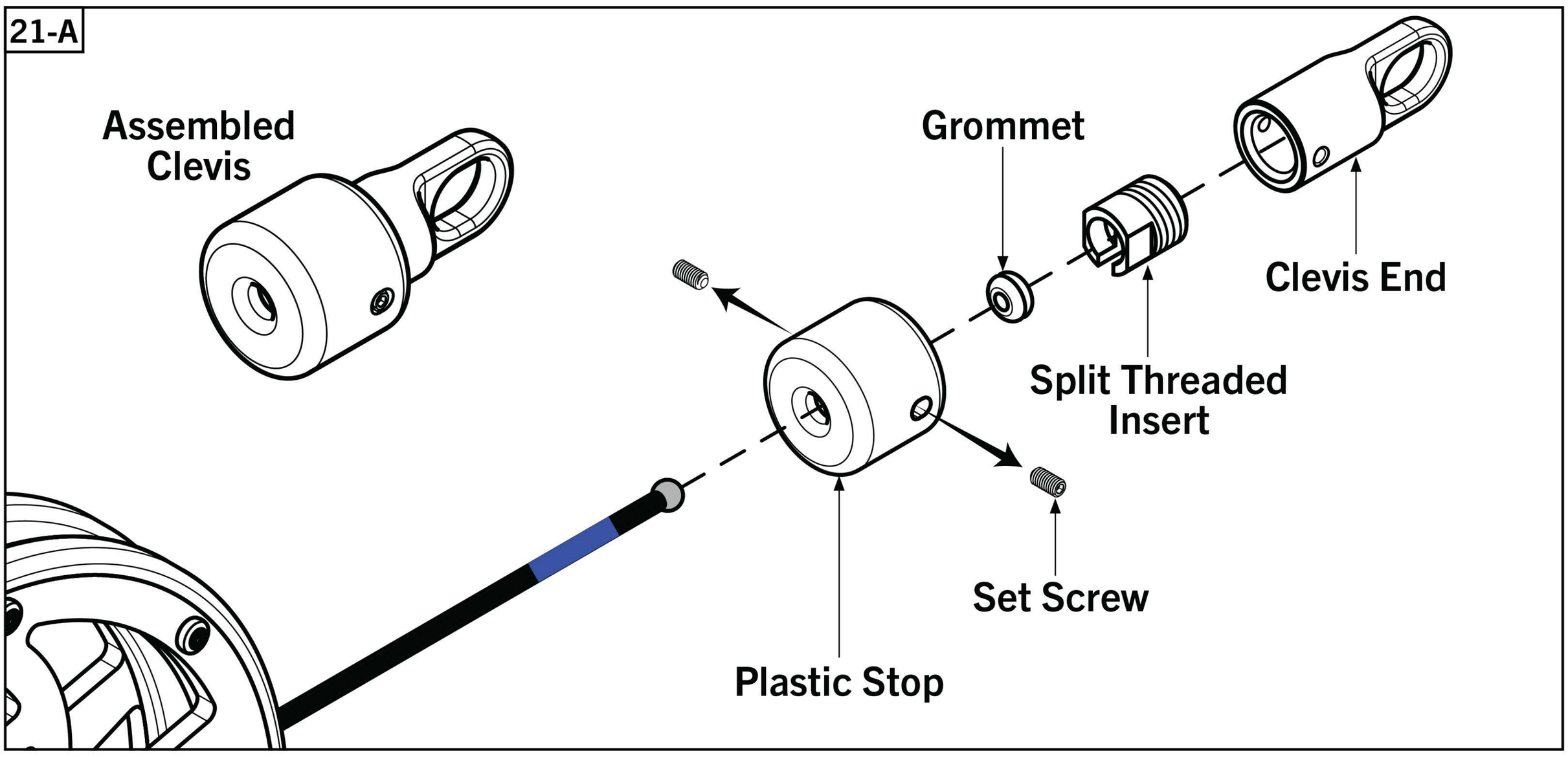

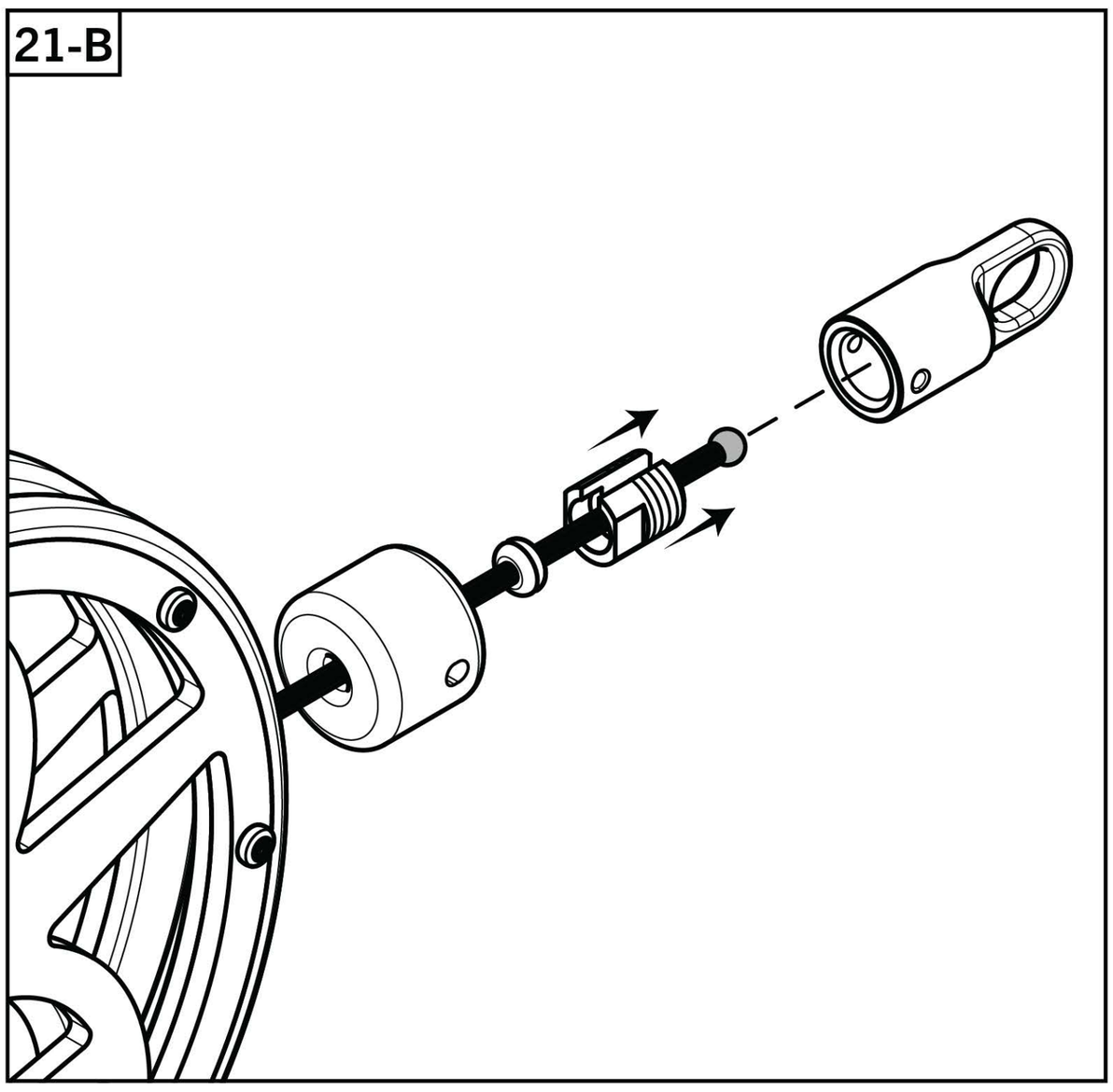

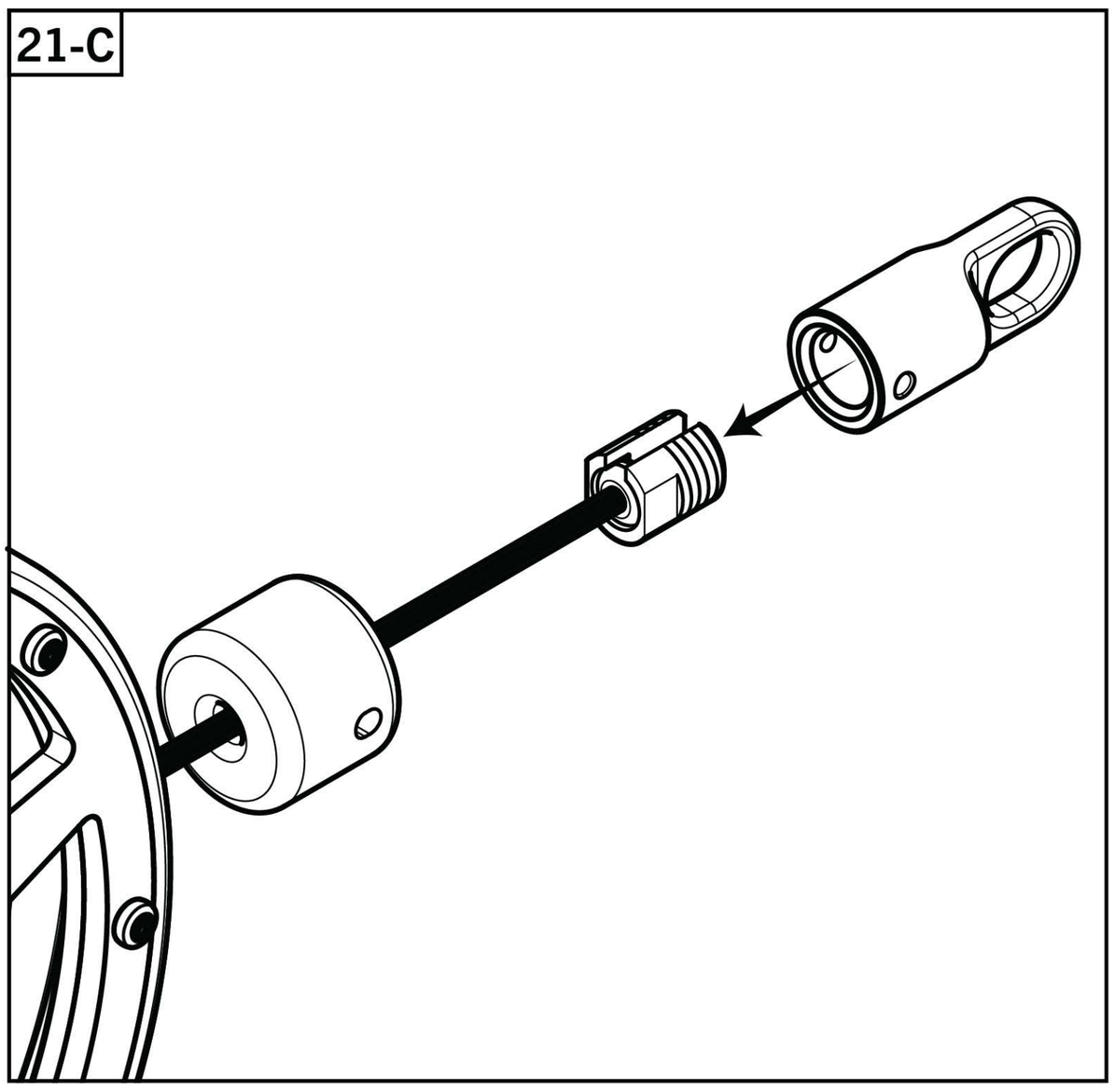

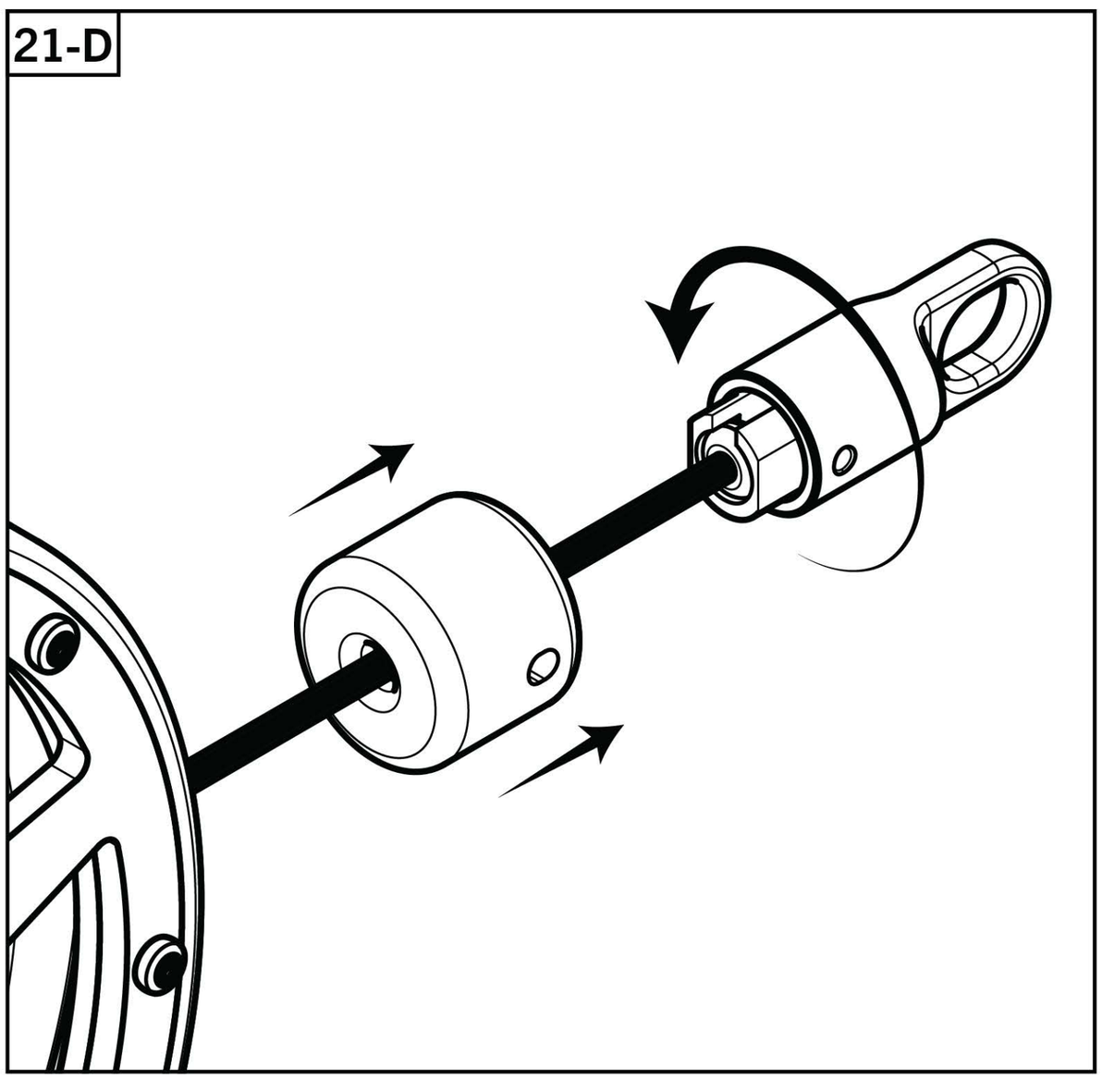

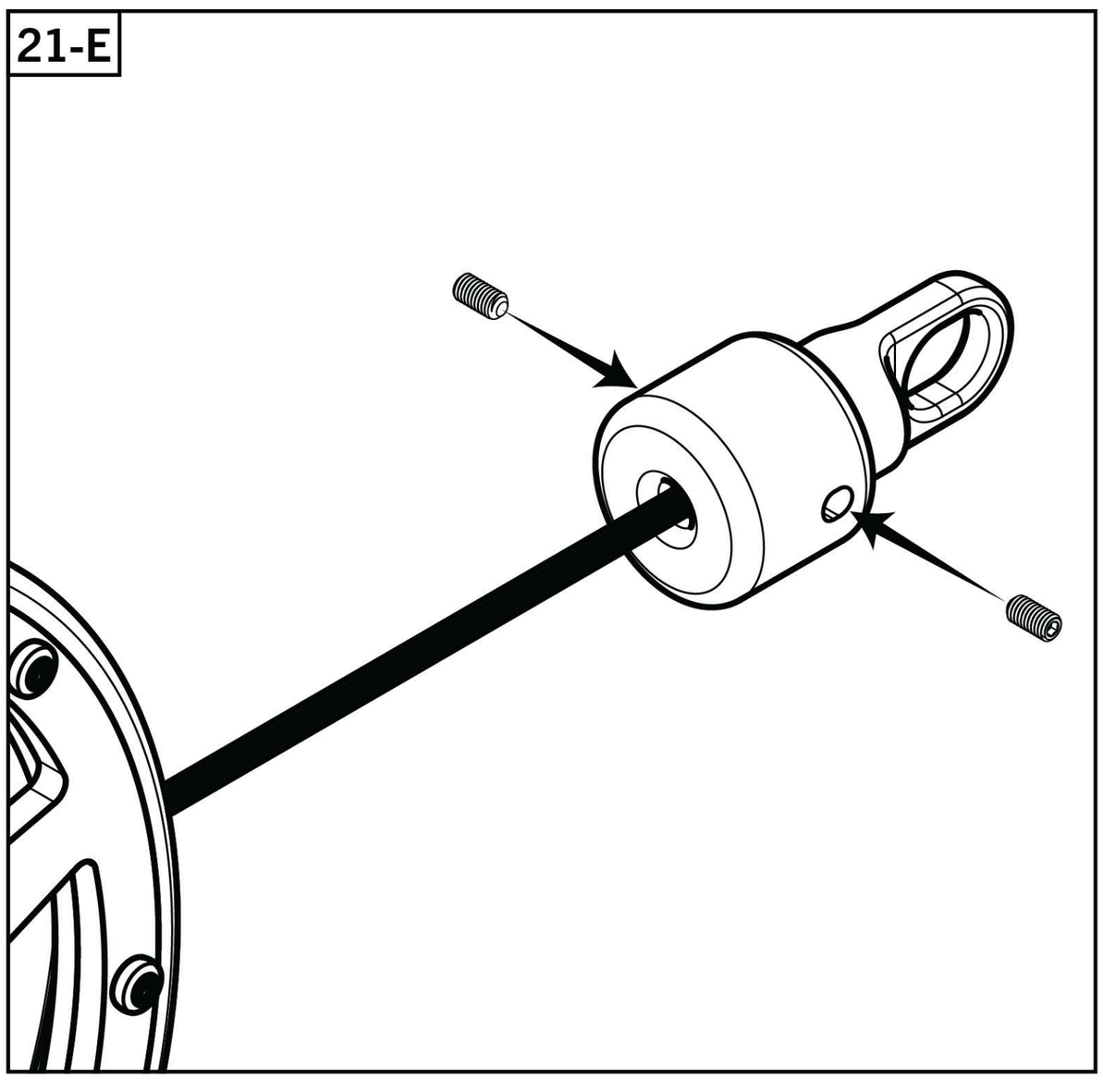

STEP 22

Note:

- Completely unwind and straighten out Lat Pull Cable [**38**] to remove any twists/kinks prior to installation.
- Assemble the Lat Pull/Low Row cable indicated by the yellow indicator on Ball End of cable and corresponding yellow arrows shown in **STEPS 22-24**
- Feed the Ball End of Lat Pull Cable [**38**] up and over the pulley in Lat Pulldown Pulley Bracket [**15**] and then towards the back of the rack.
- Feed around the pulley in the top of Rear 3X3 Upright [**2**] and then all the way down, ensuring cable runs INSIDE THE UPRIGHT.

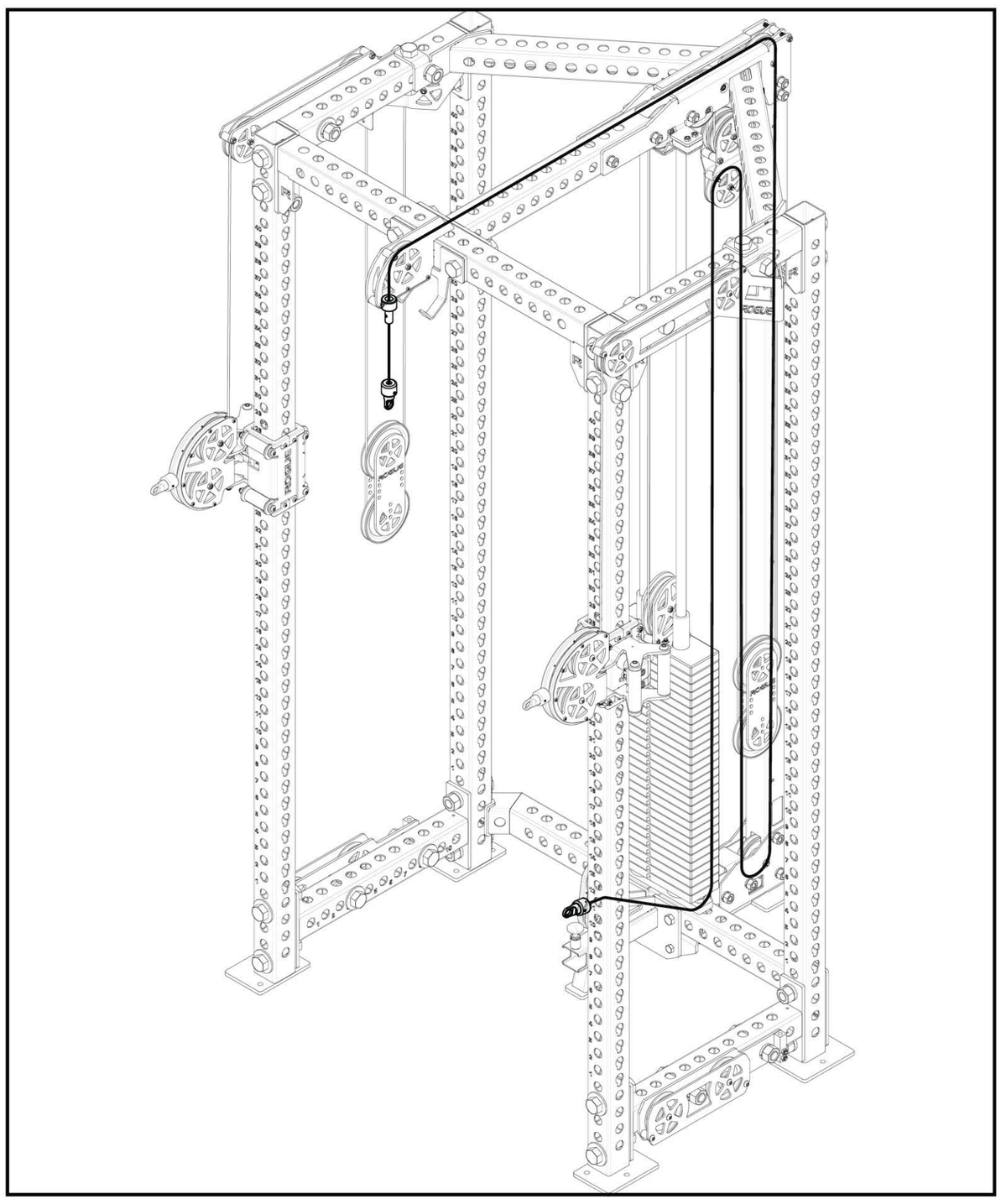

22-A

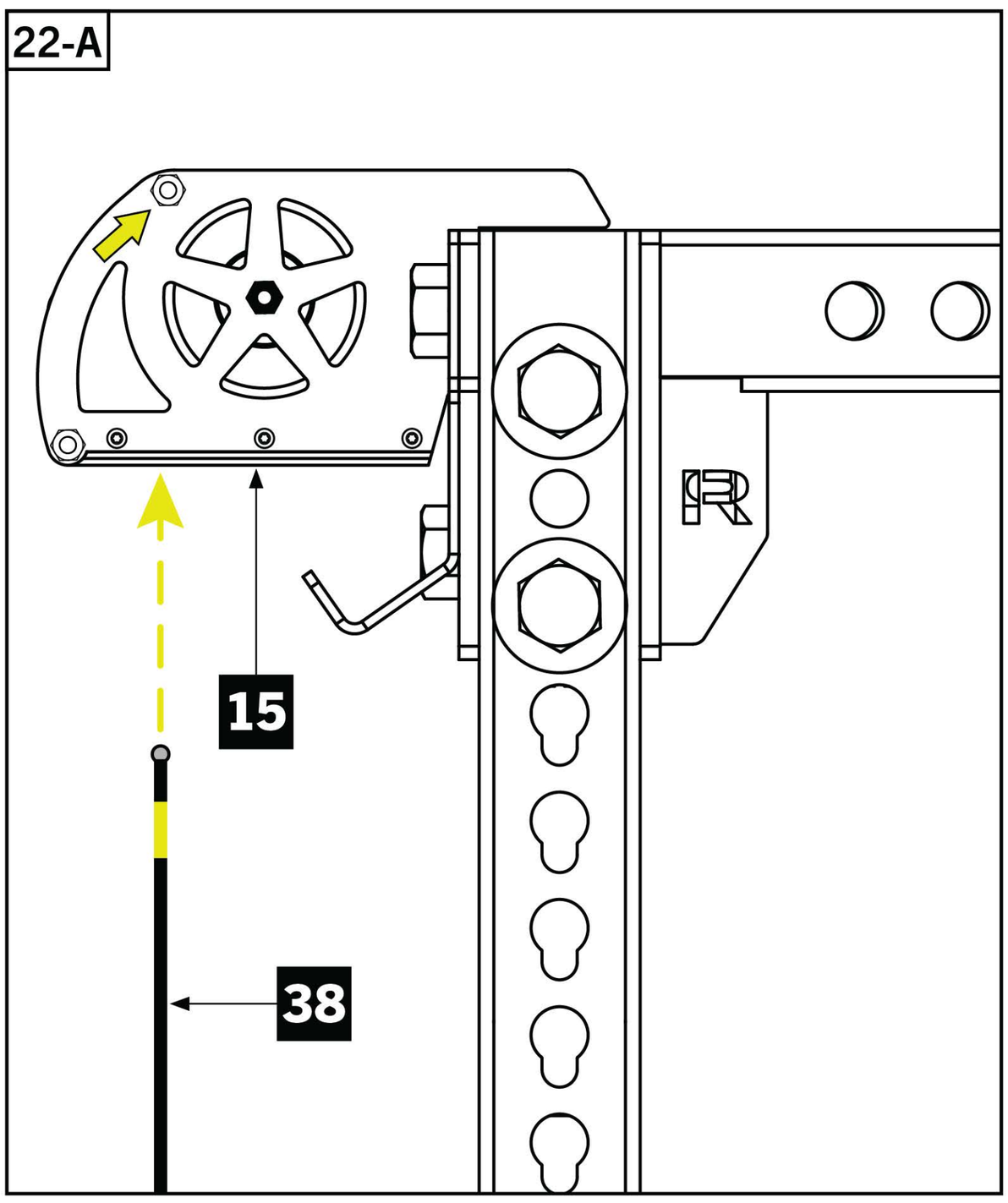

22-B

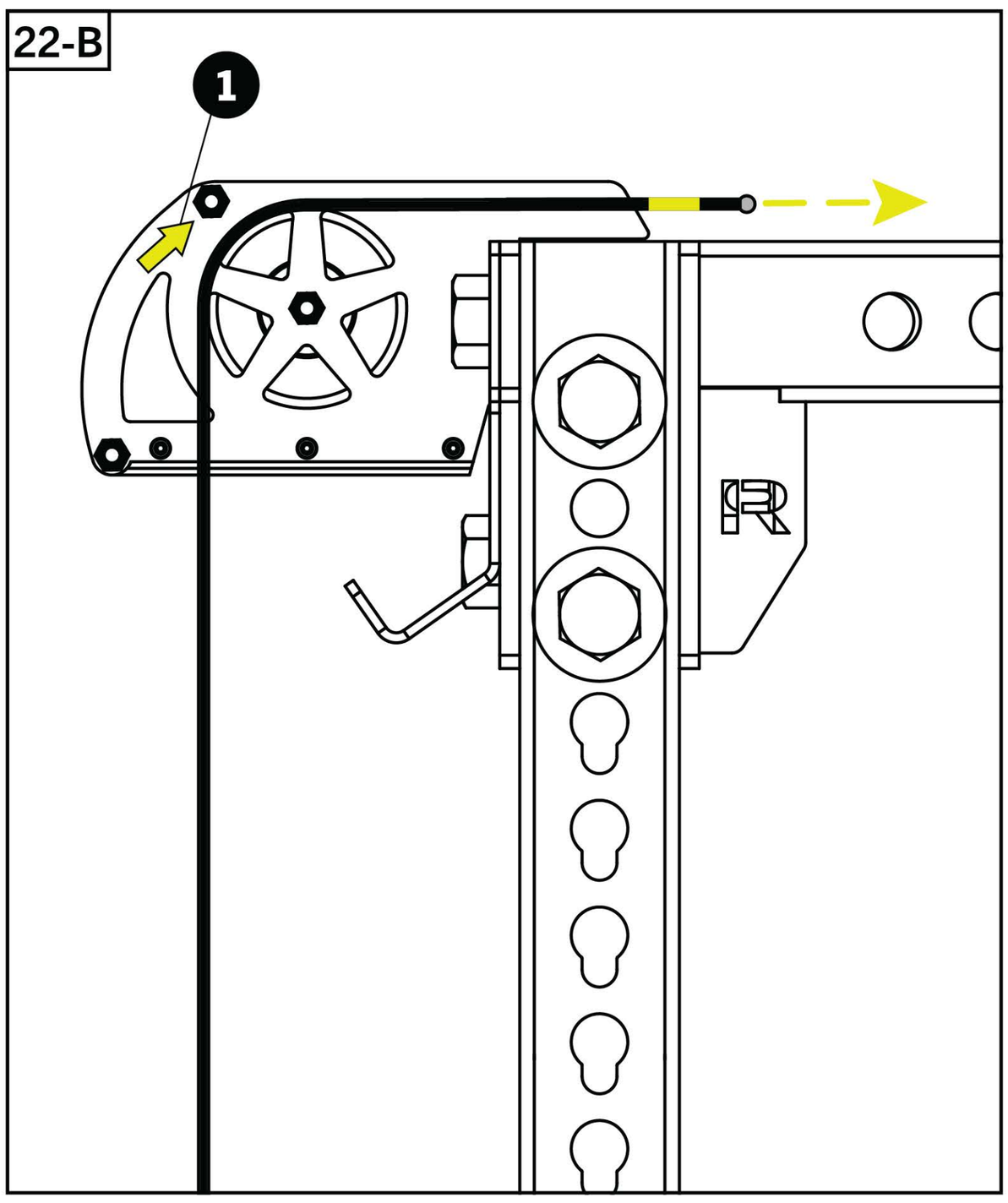

22-C

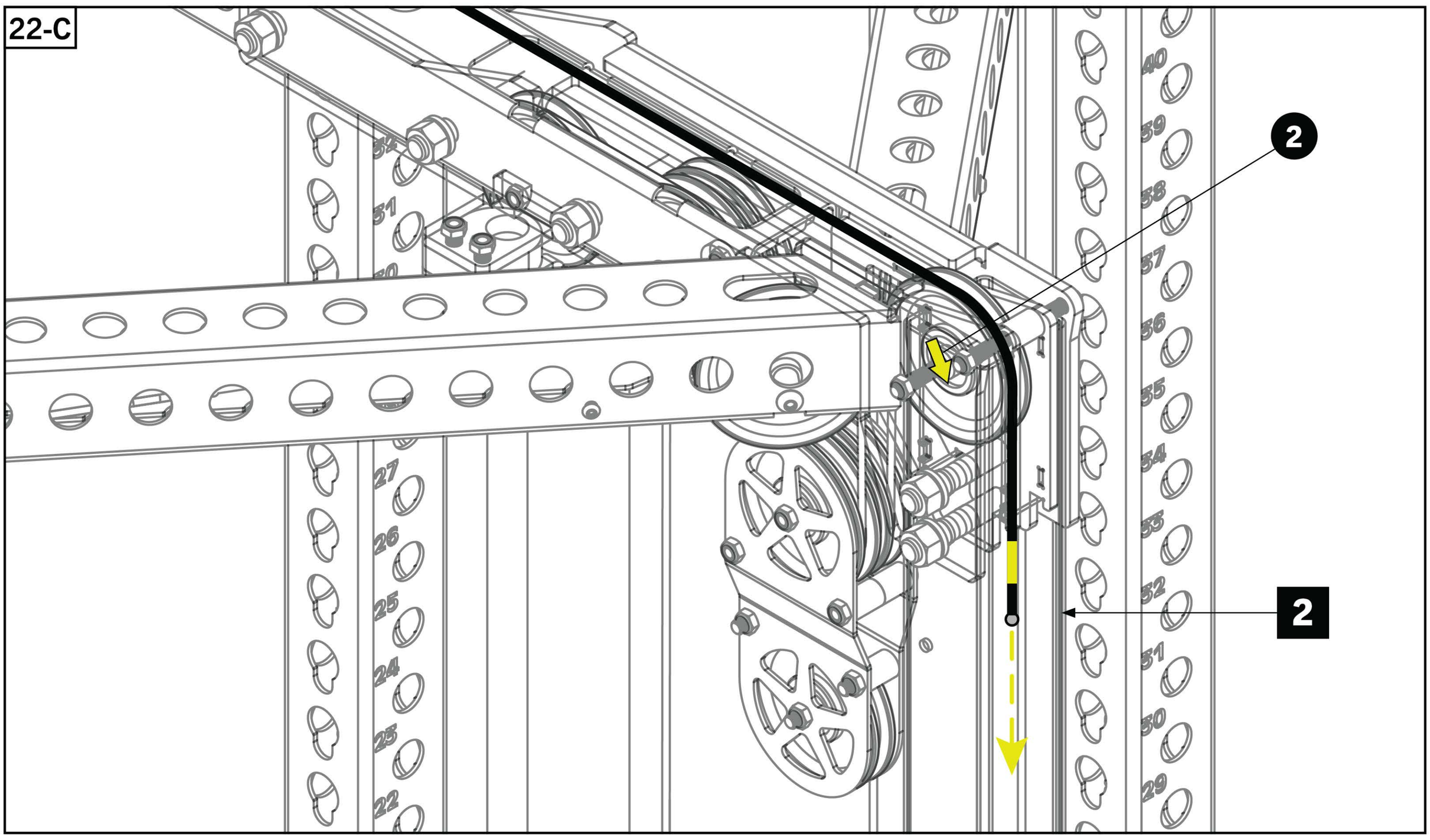

STEP 23

- Feeding cable around the rear pulley of the Low Rear Pulley Assembly [**18**] and up. This is easiest accomplished by pulling most of slack through rear window on Rear Upright and then re-inserting.
- Feed cable around the bottom pulley in the Rear Peanut Pulley Assembly [**32**] and then back down again.
- Feed around the front pulley in the Low Rear Pulley Assembly, continuing diagonally up underneath the Weight Stack through the cutouts on Low Row Crossmember [**6**] and towards the Low Row Assembly.

Note:

- Place finger through viewing windows to guide cable around pulleys as needed.

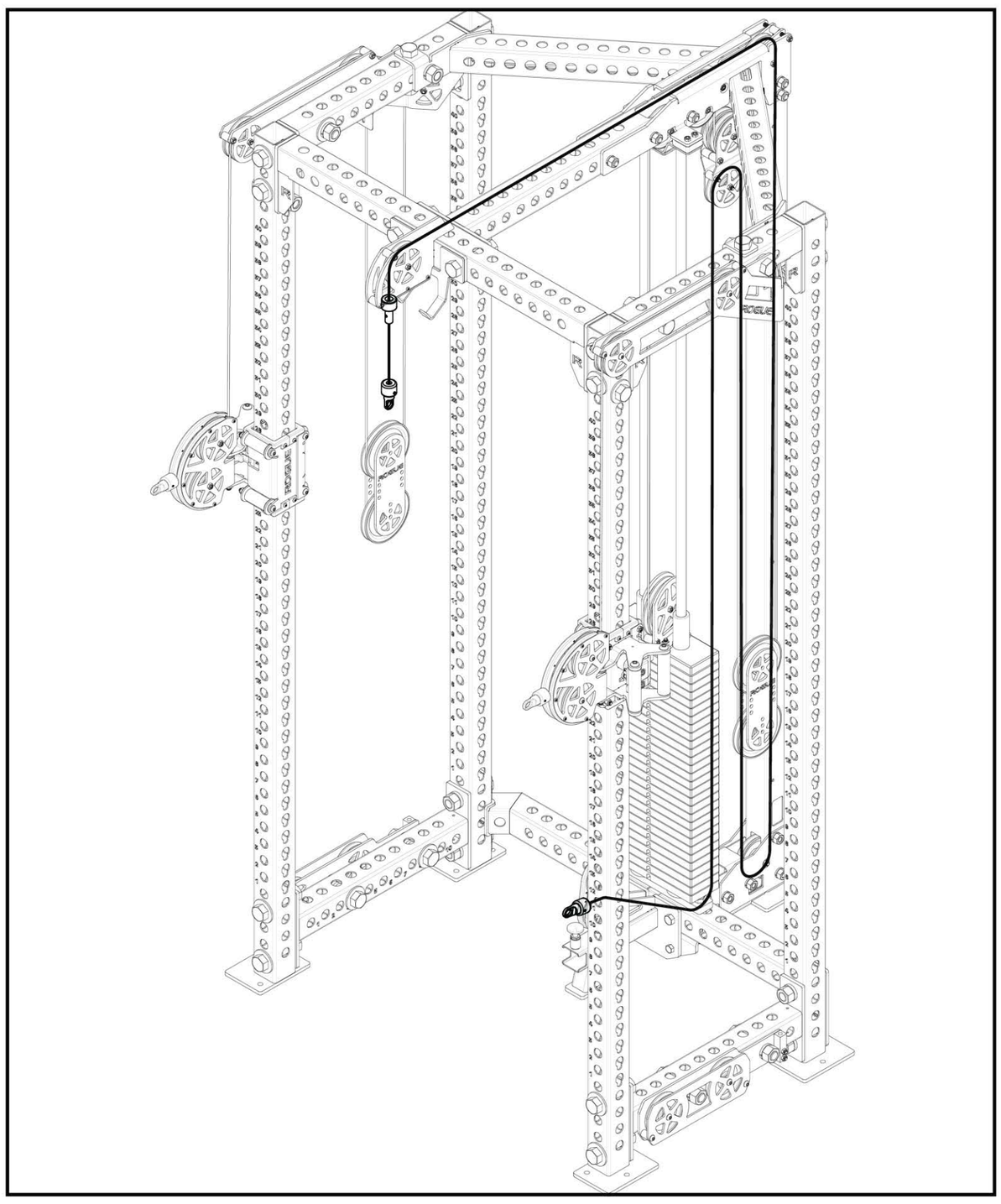

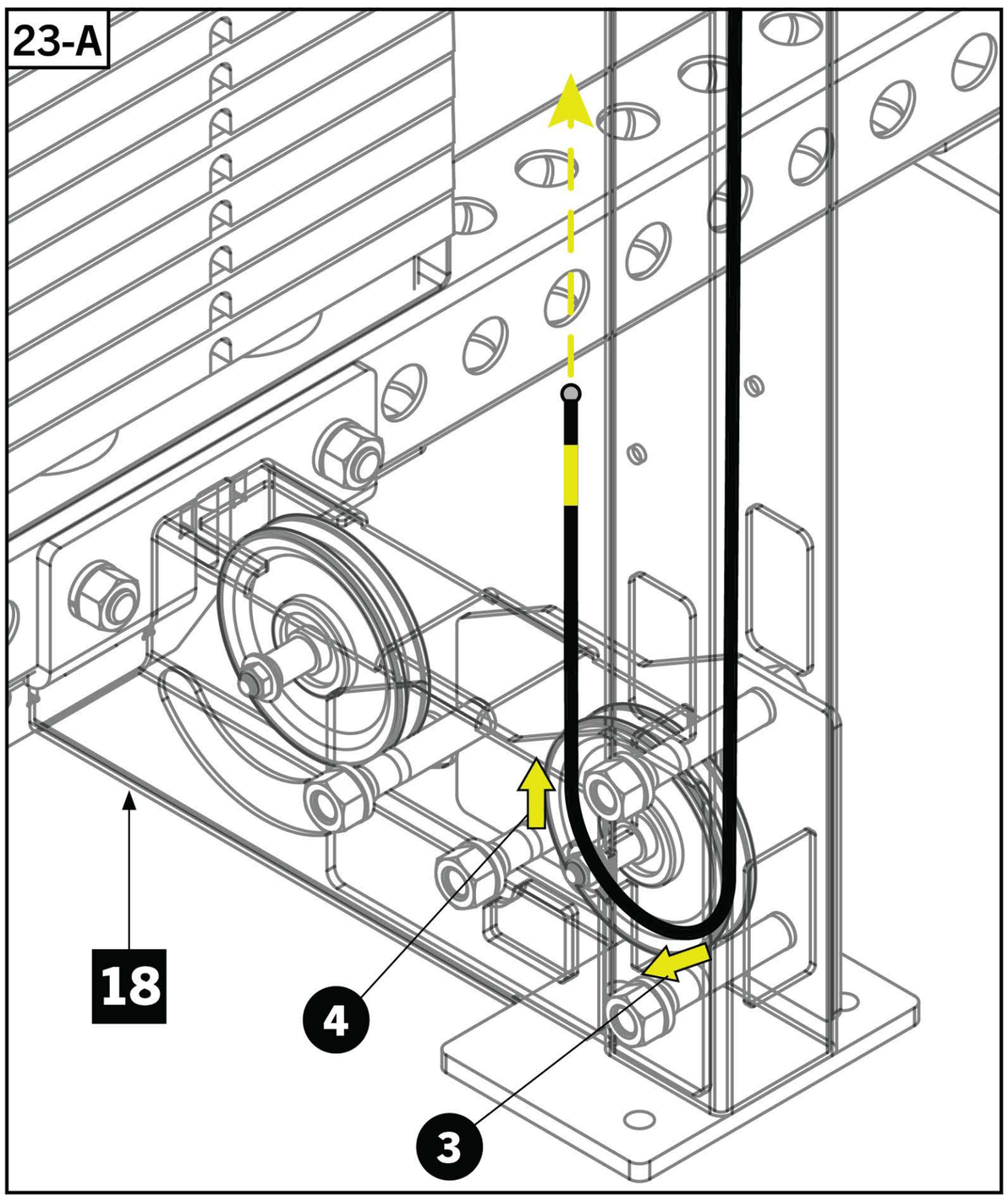

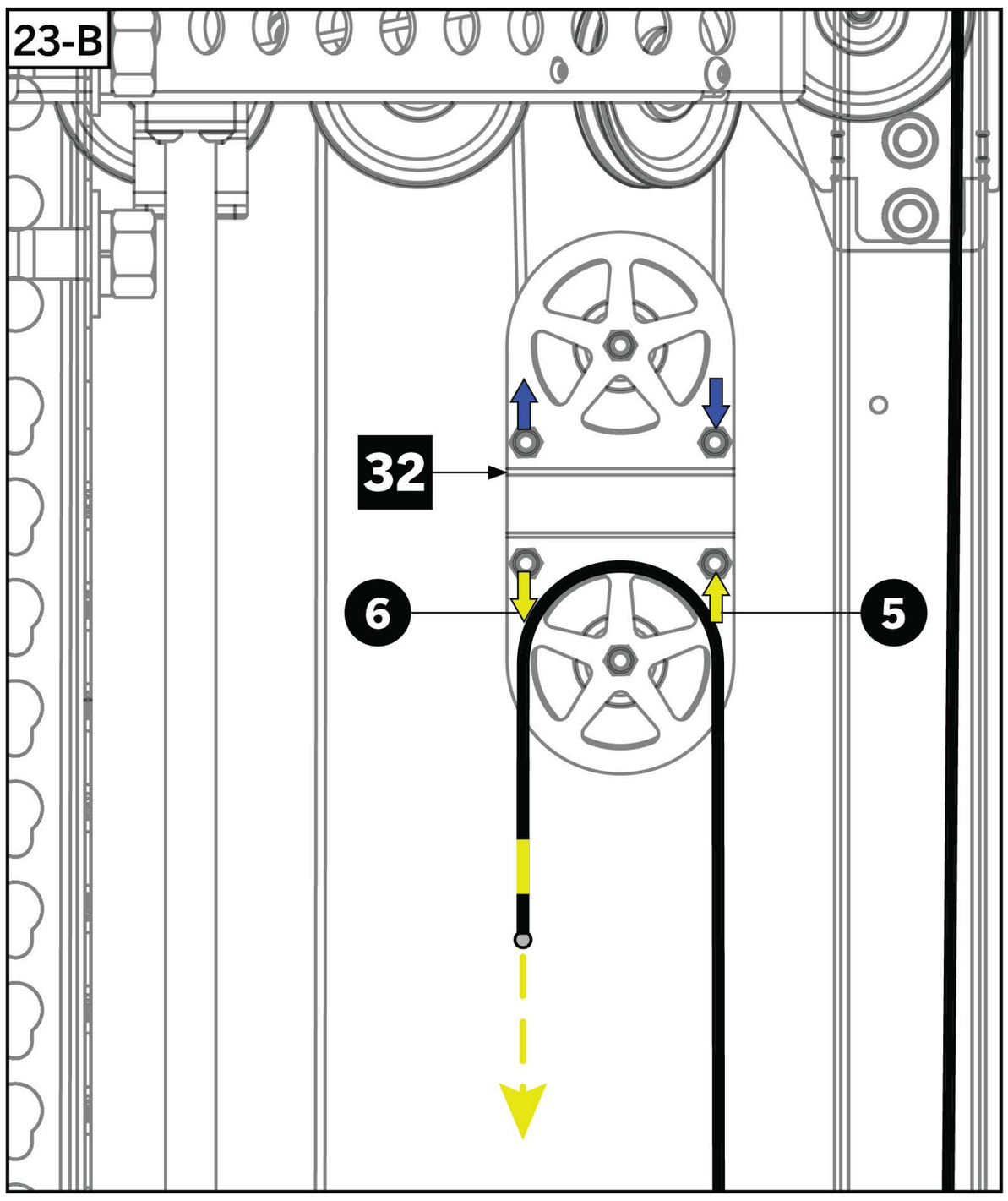

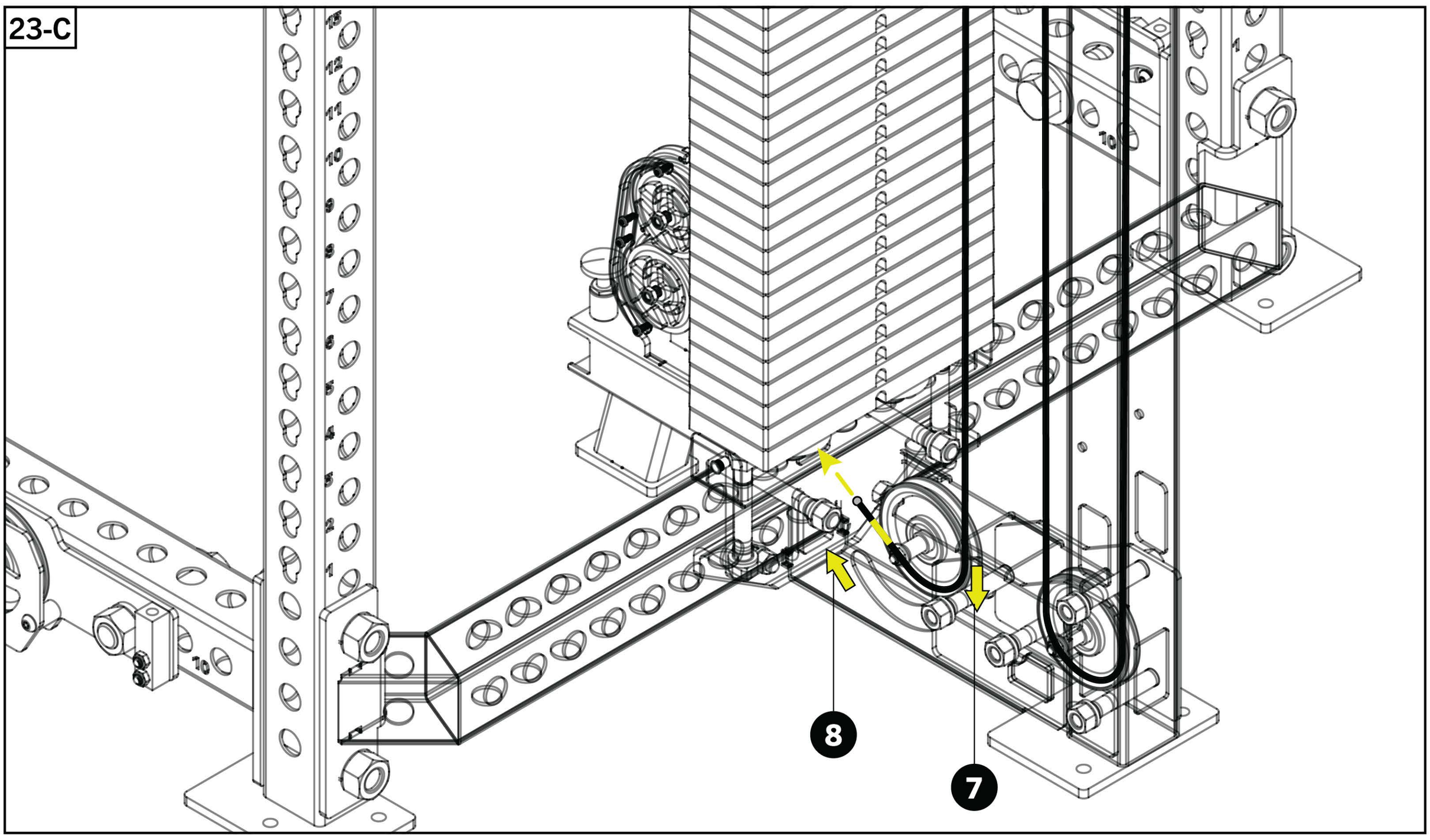

STEP 24

Tools Required:

- 3/32” Allen Key & 5/8” Wrench
- Feed cable out through the front of the Low Row Assembly [**17**], ensuring cable passes in between upper and lower pulleys.
- Remove yellow tag from Ball End of cable and pull cable out far enough to assemble Clevis.
- Assemble Clevis onto ball end of cable using the same procedure described on **STEP 21**.

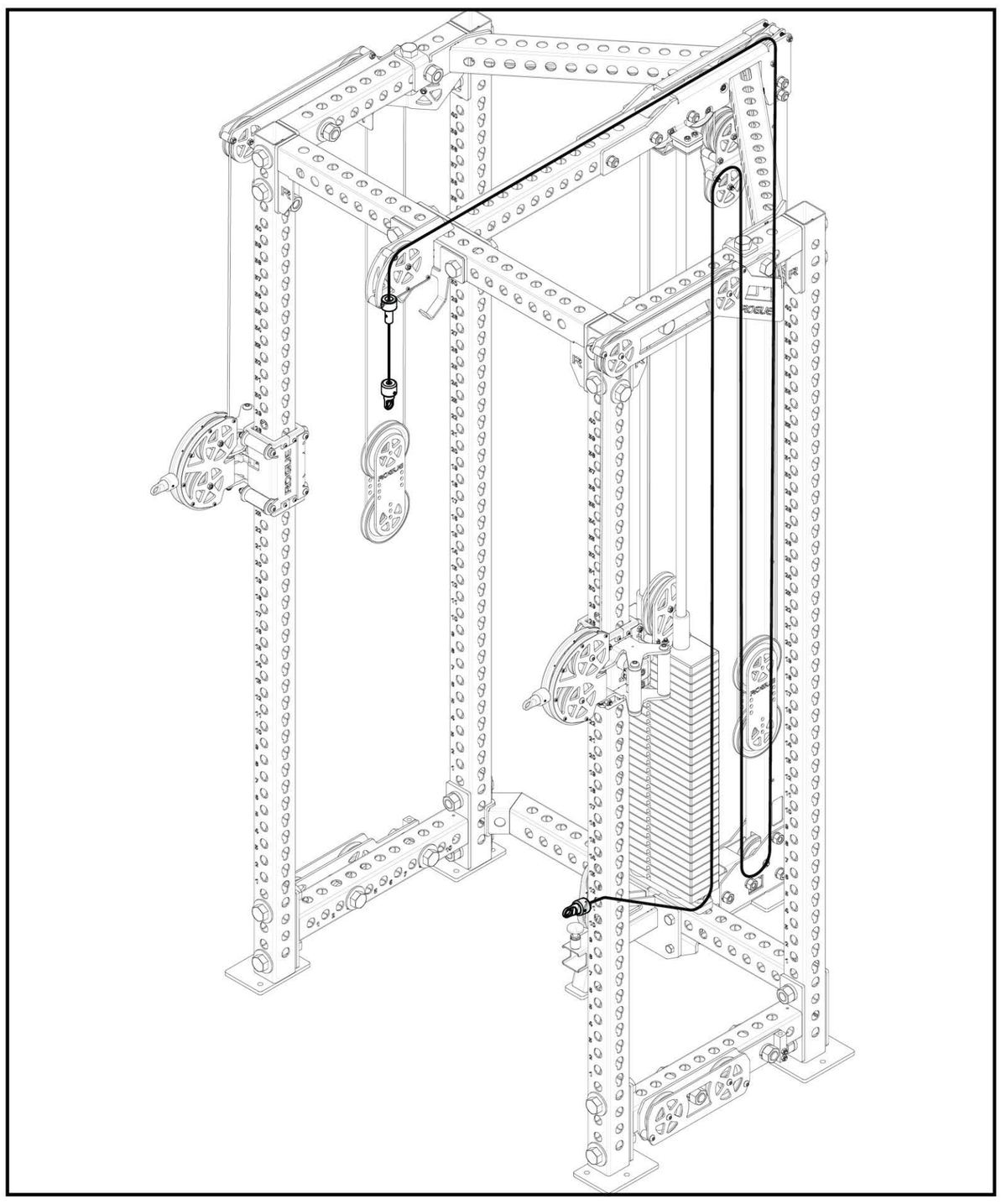

24-A

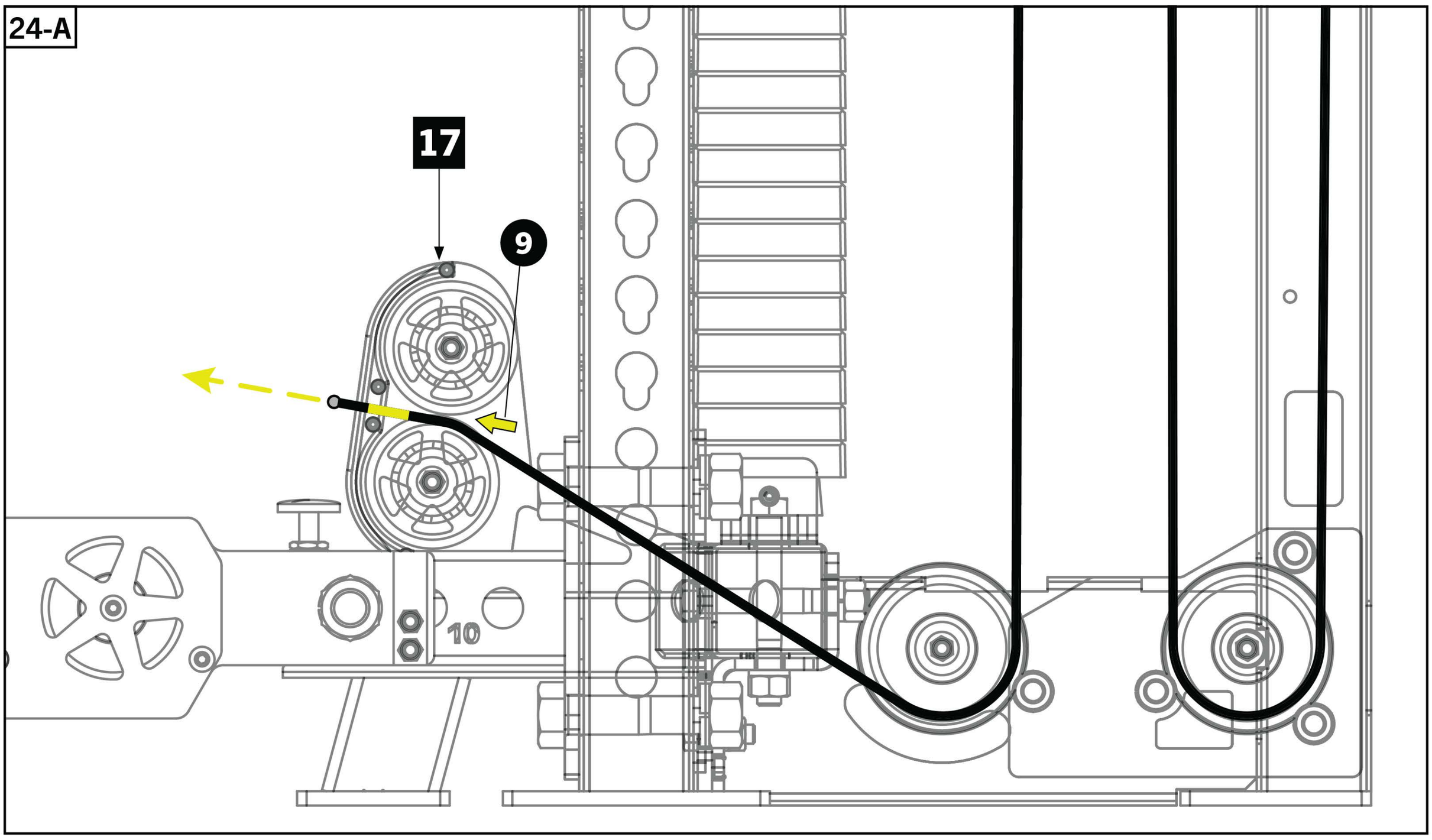

24-B

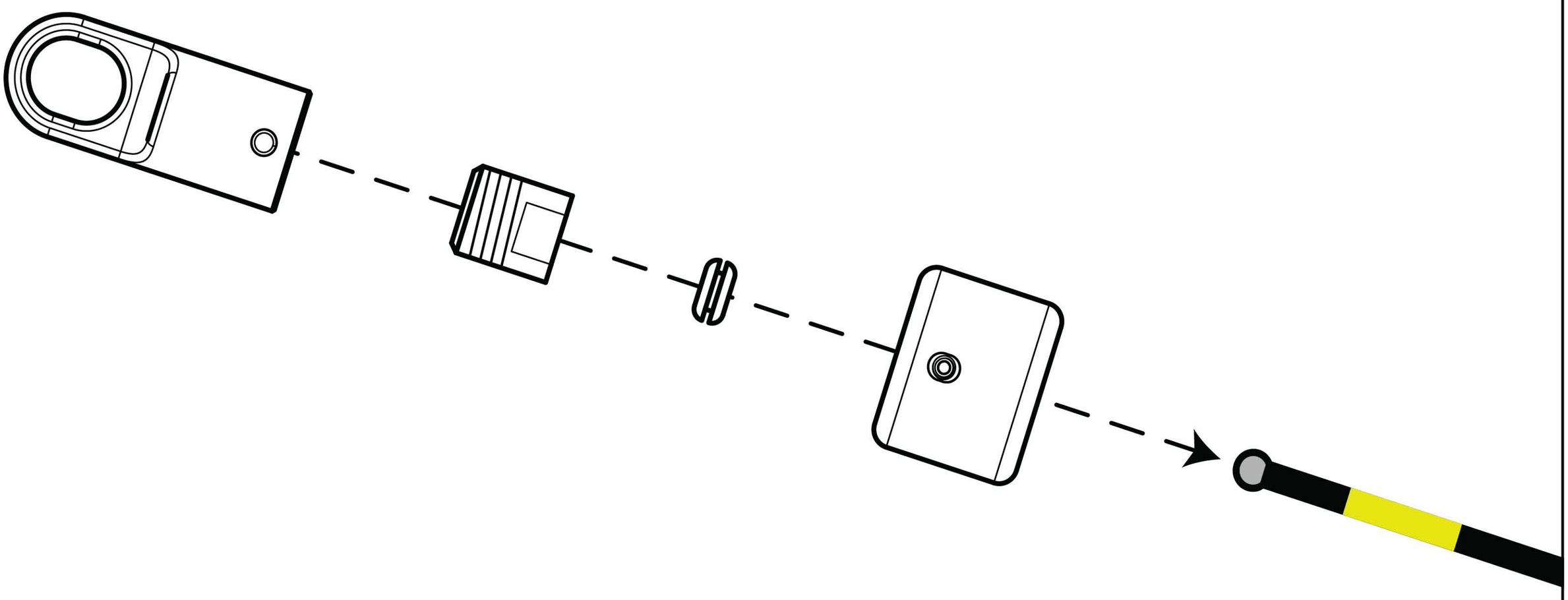

STEP 25

Tools Required:

- 7/32” Allen Key & 9/16” Wrench
- Remove Plastic Cable Retainers from **both** Bottom Side Pulley Assemblies [**30**] and [**31**] by removing 3/8” Button Head Screws and Nuts.
- Remove only the lower Plastic Cable Retainers from both Side Peanut Pulleys [**33**].
- Hardware will be re-installed on **STEP 28**.

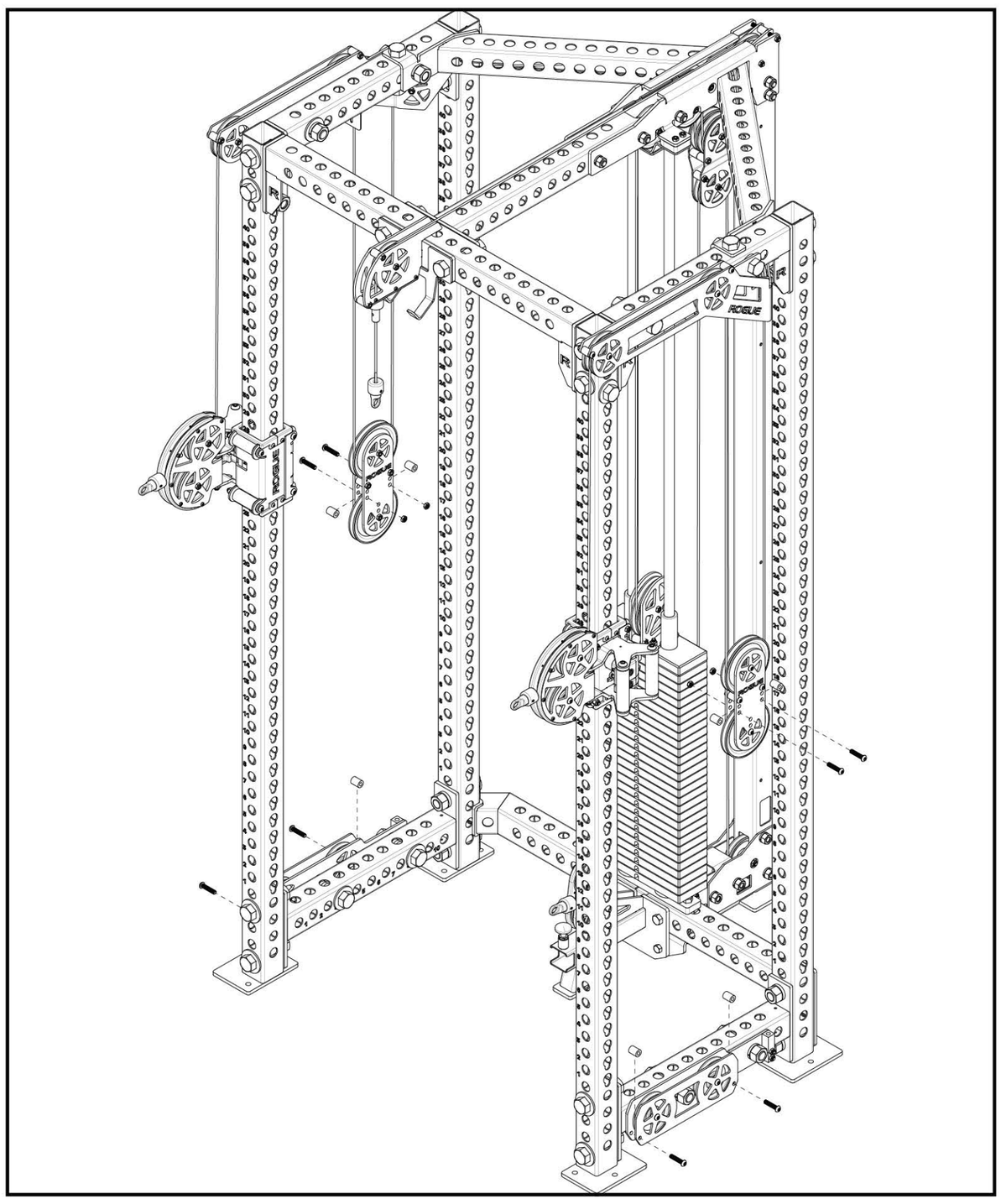

25-A

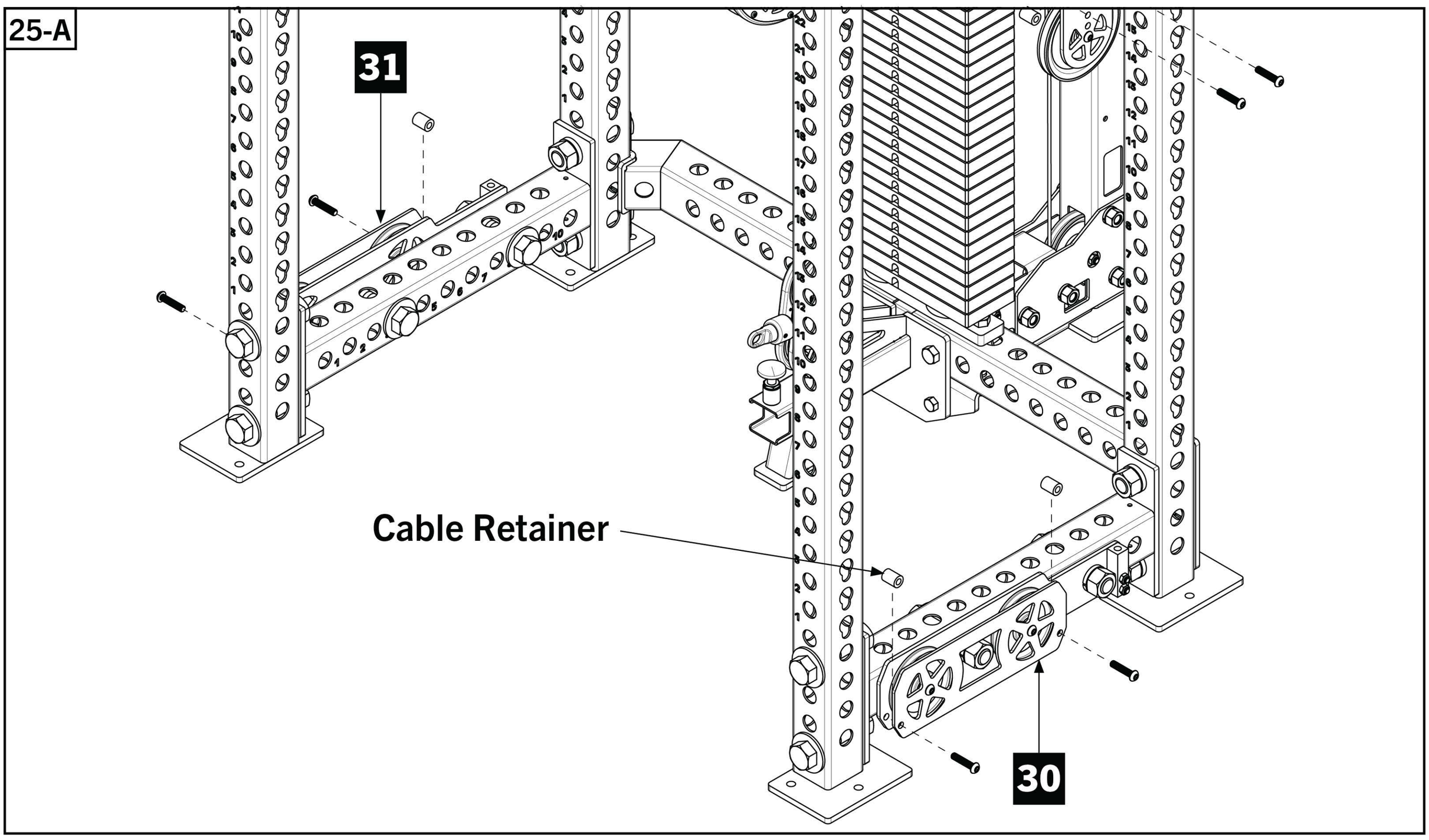

25-B

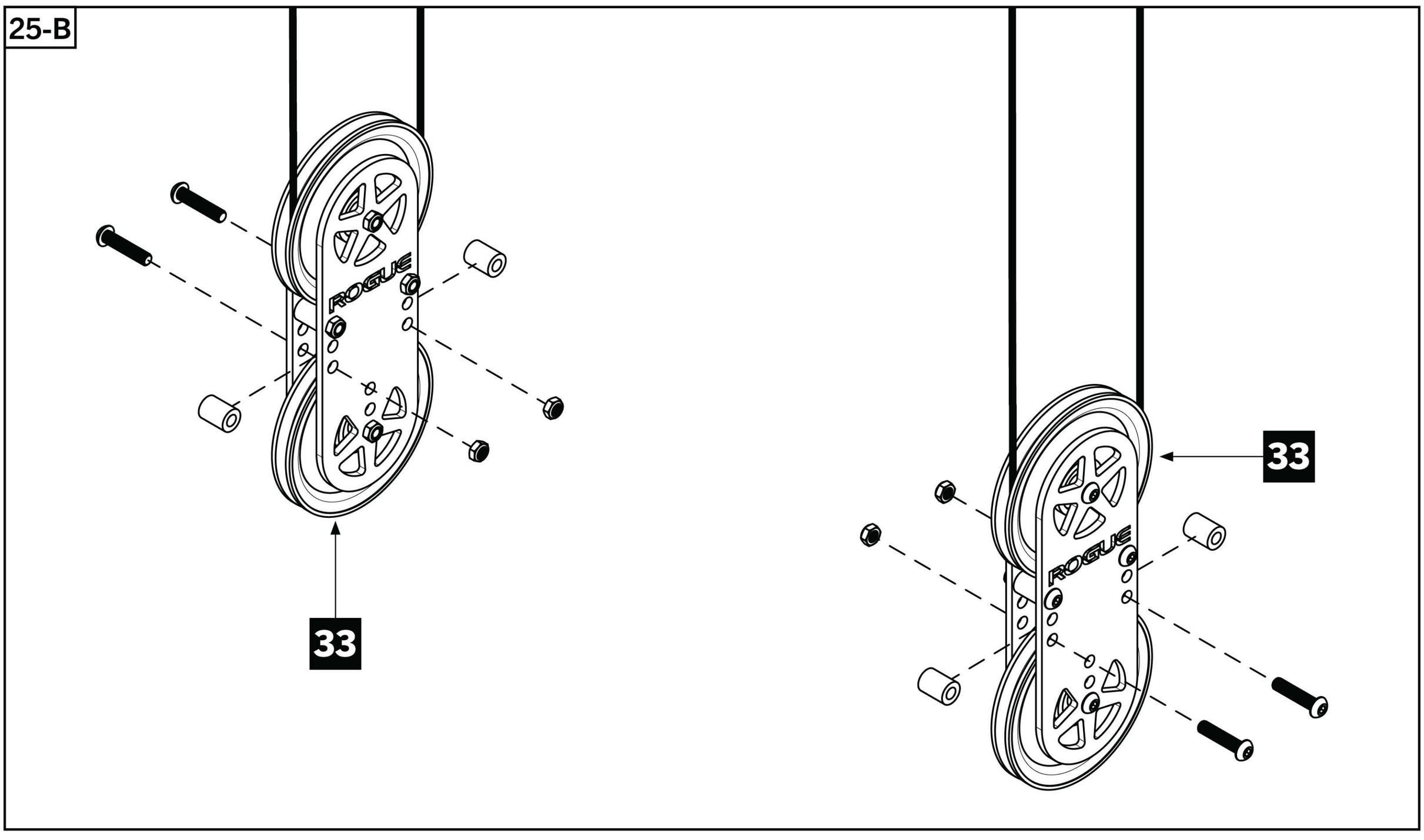

STEP 26

Tools Required:

- 3/4” Wrench
- Assemble one of the included Low Side Cables [**39**] (red tag) onto RH side of rack by inserting the tagless end into stop block on back of Swivel Trolley RH [**7**].
- Loosen the hex nut if needed to ensure approximately 1/2” of threads are showing between the bolt head and nut.
- Tighten the bottom bolt head until the nut is tight against the stop block.
- Feed the other end of cable with red tag down around the frontmost pulley of Bottom Pulley Assembly-RH [**30**] and continue towards back of rack.

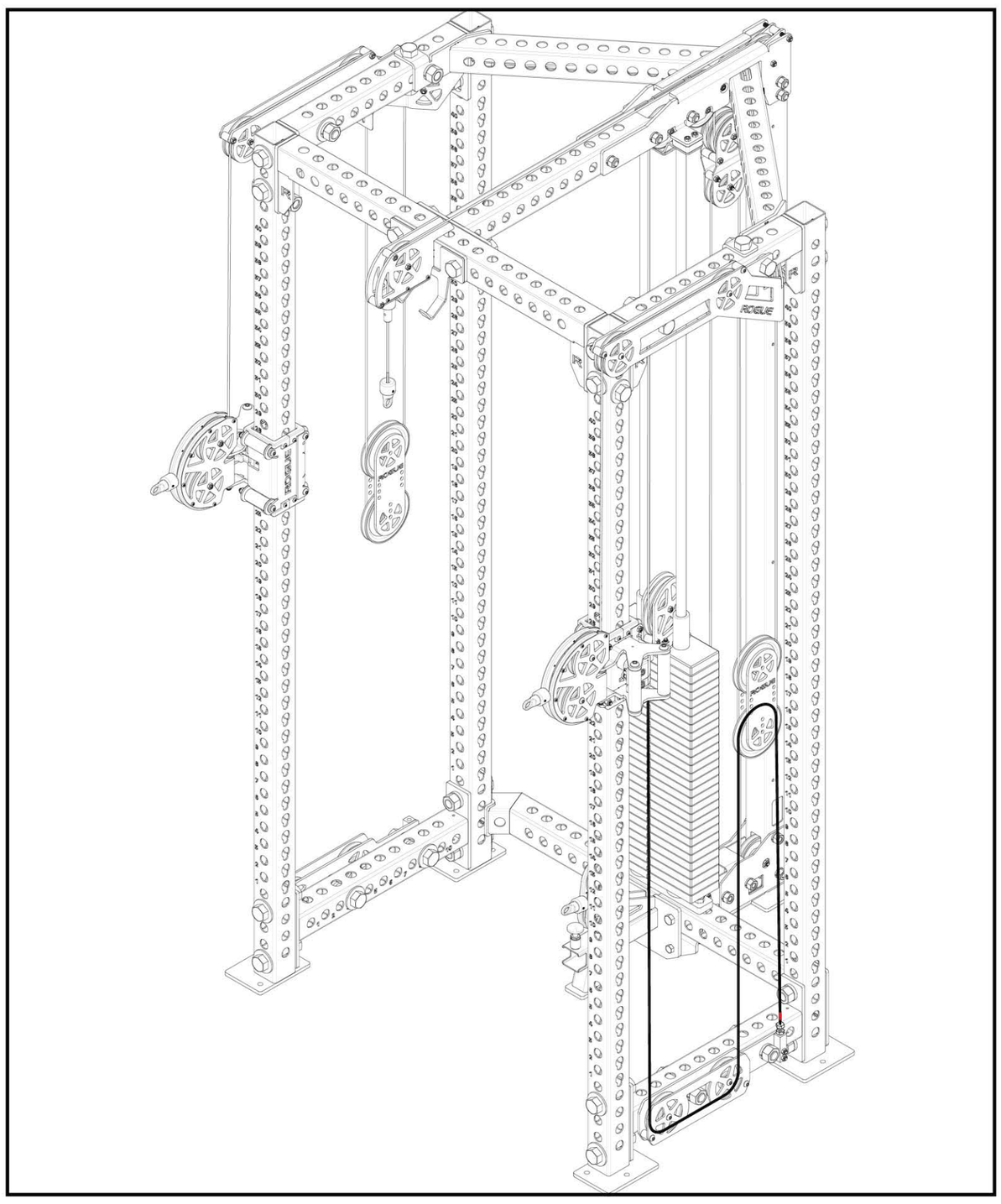

26-A

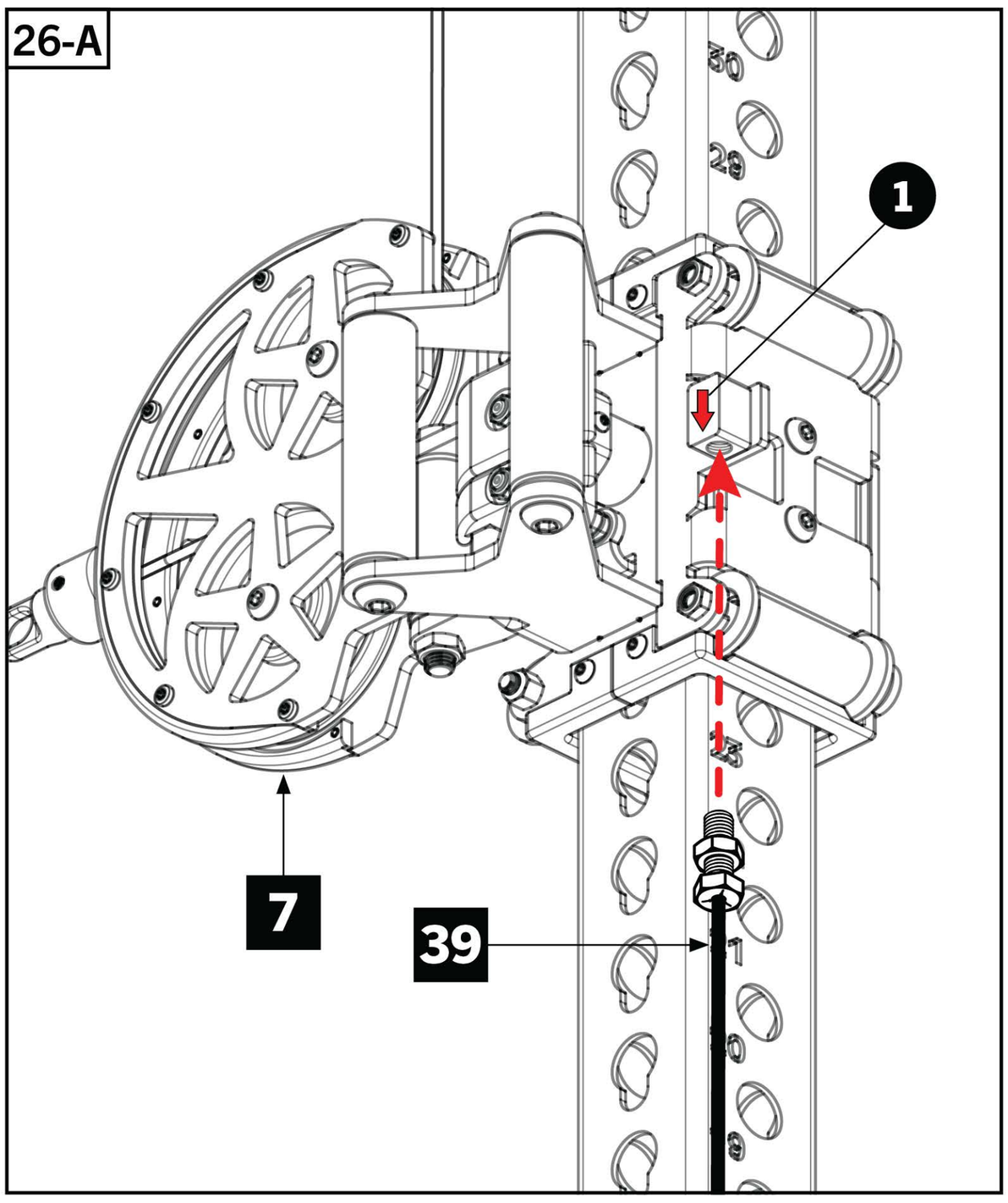

26-B

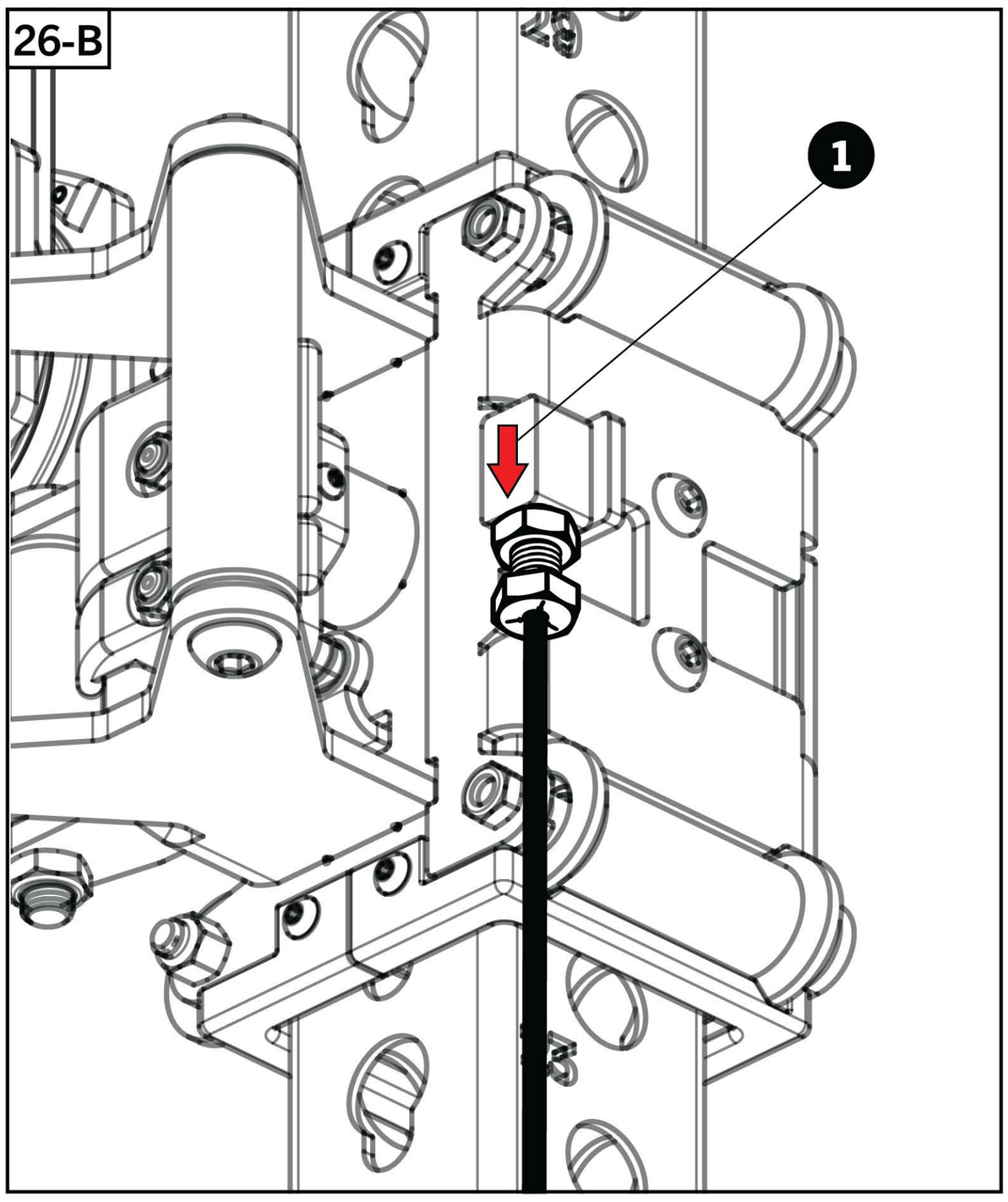

26-C

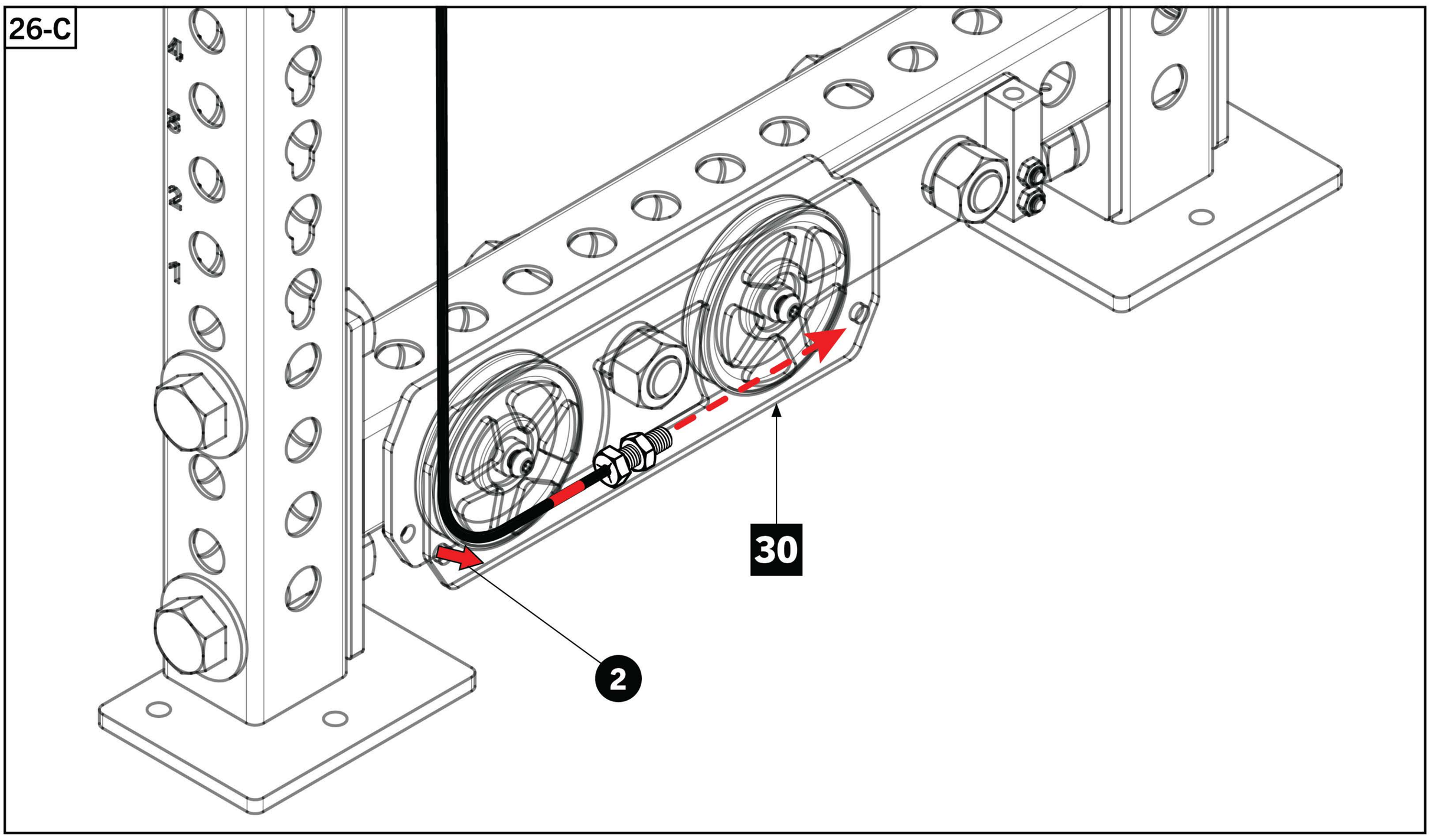

STEP 27

Tools Required:

- 3/4” Wrench
- Continue feeding around the pulley on Bottom Rear Pulley Assembly and up around the lower Side Peanut Pulley [**33**], following the arrow indicator directions.
- Insert threaded end into stop block at the back of Bottom Side Pulley Assembly-RH [**30**] and screw tight, ensuring 1/2” of threads showing between 3/4” bolt head and hex nut.

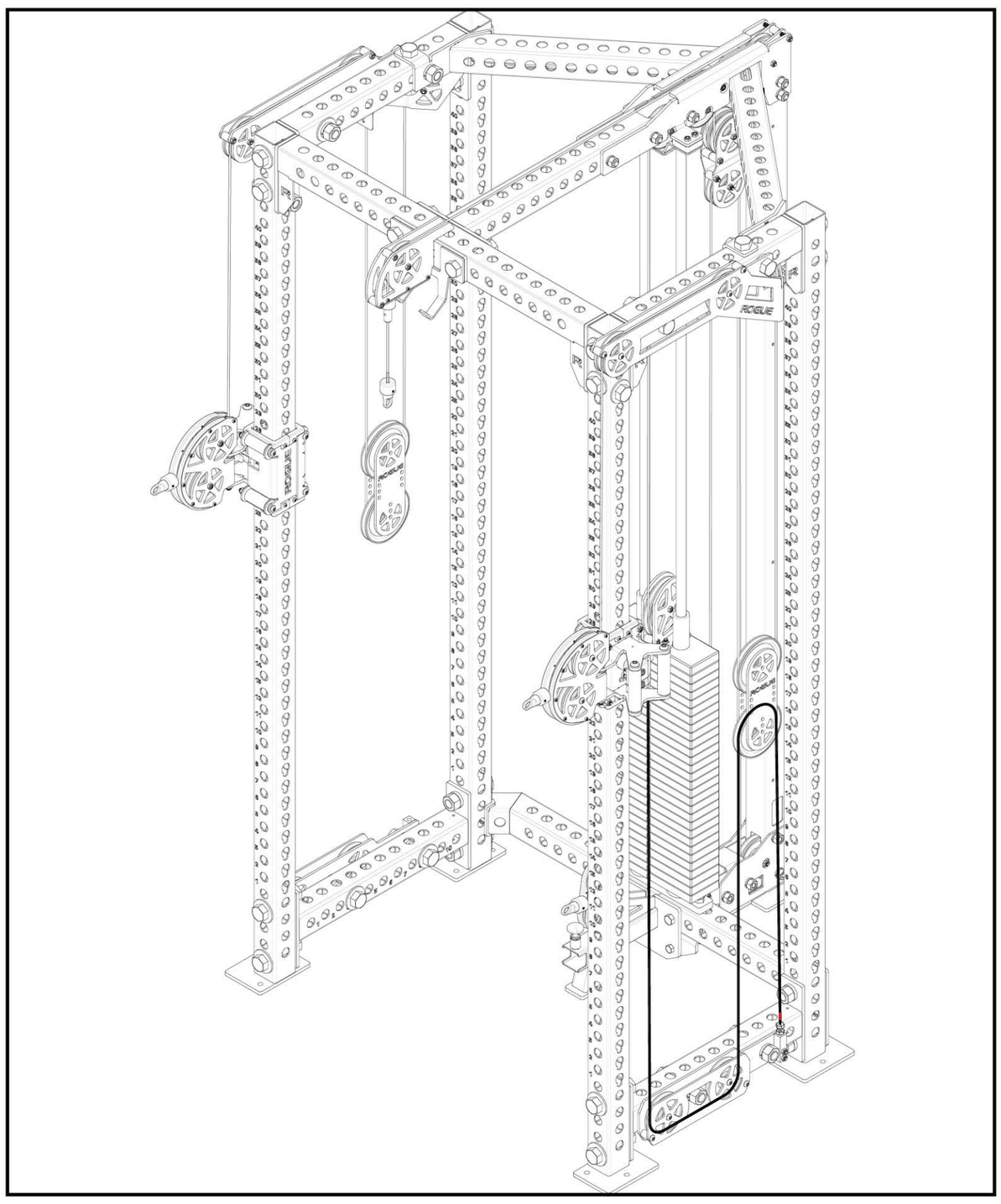

27-A

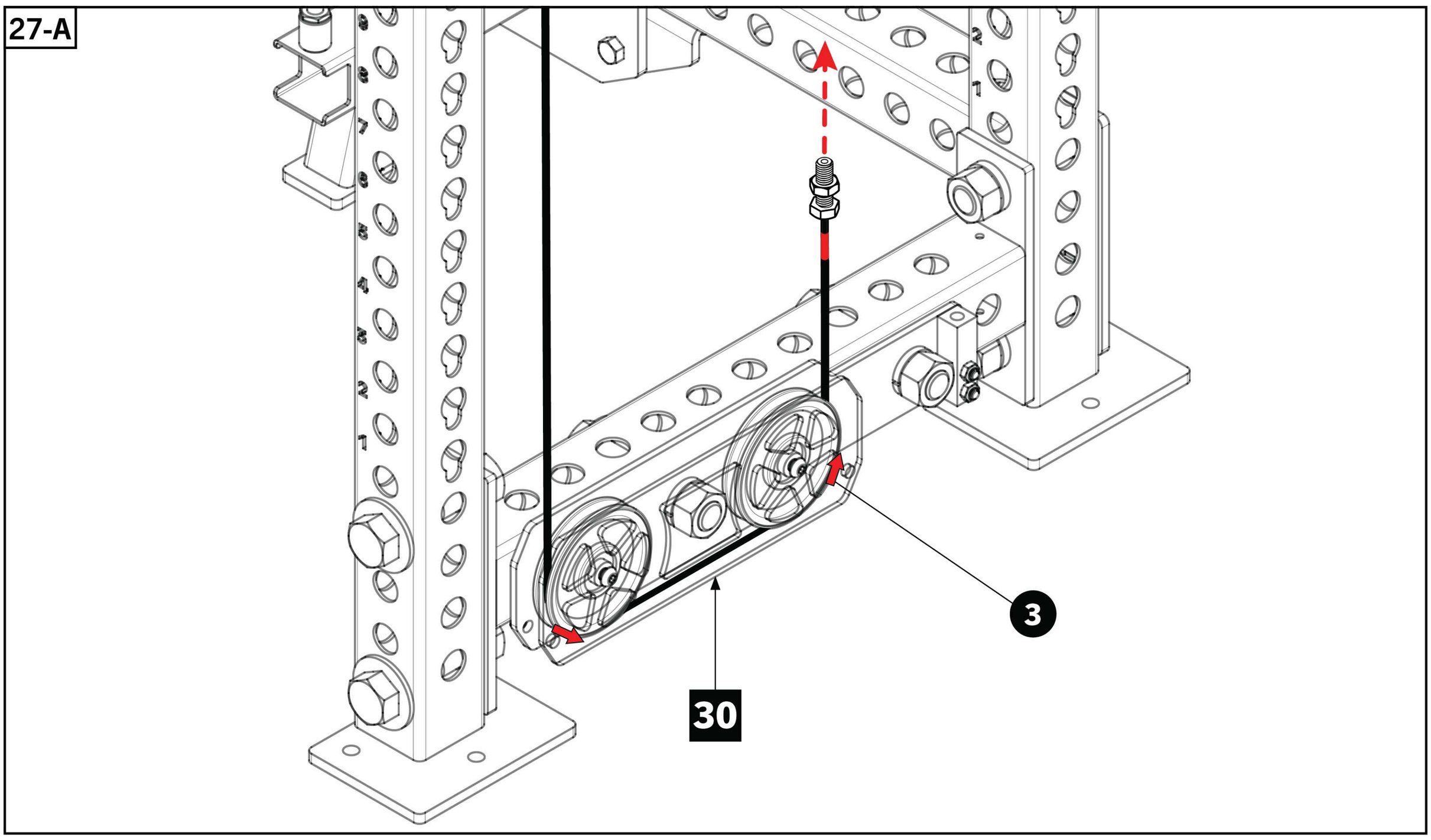

27-B

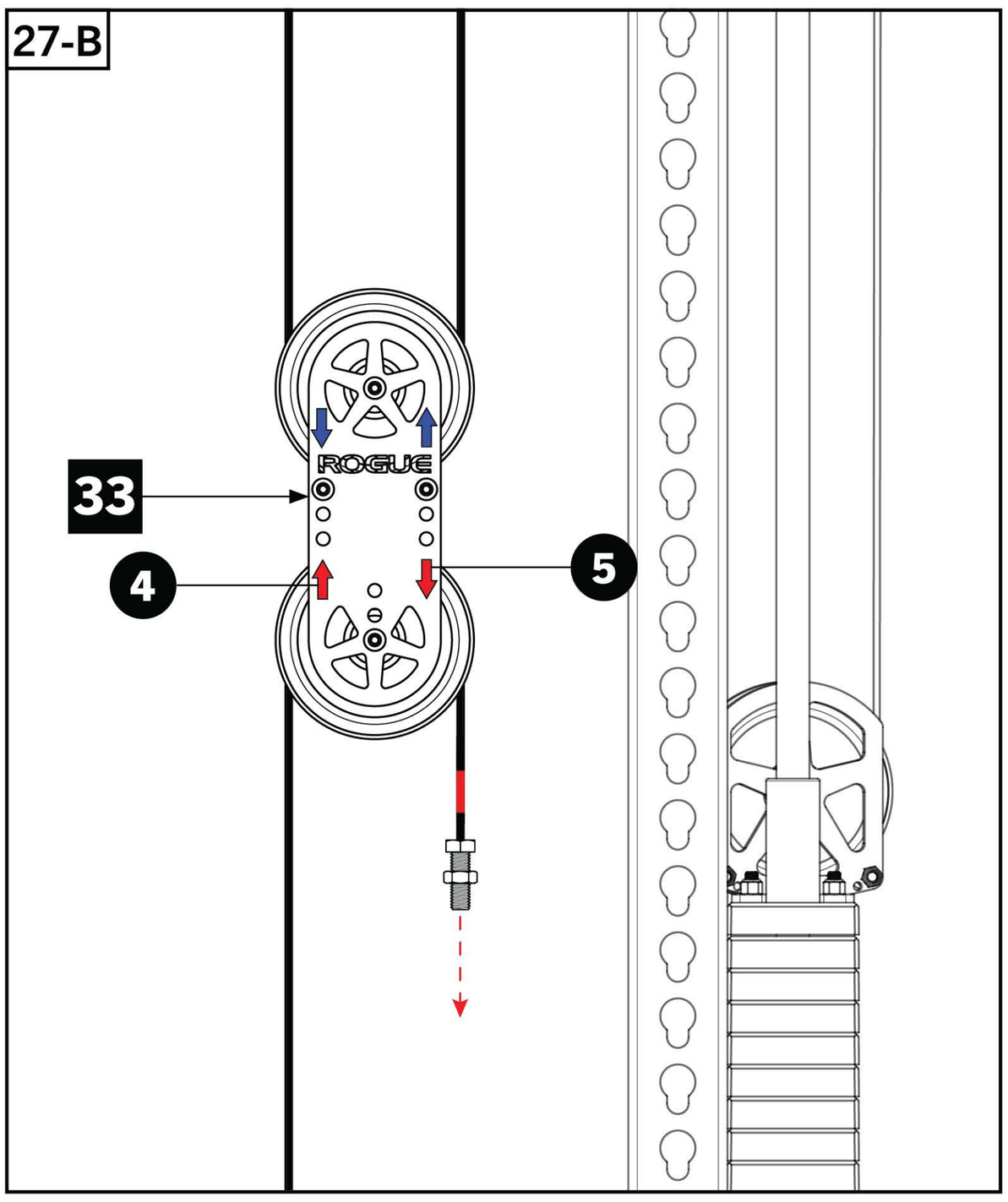

27-C

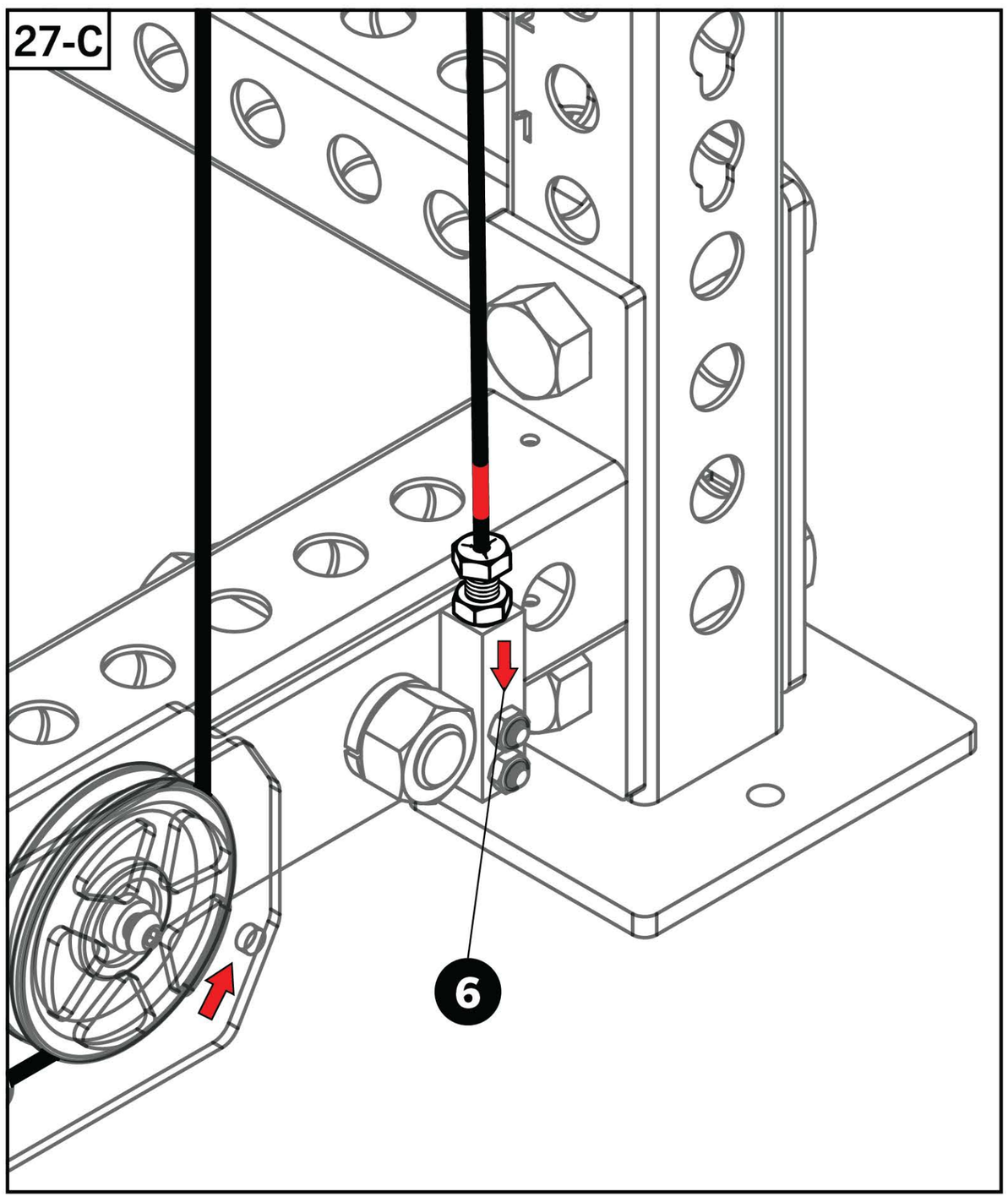

STEP 28

Tools Required:
- 3/4” Wrench
- **28-A**: Follow **STEP 26** & **27** again to assemble the remaining Low Side Cable (red tag) on the **Left Hand side of rack**.
- Start at stop block on the Swivel Trolley LH [**8**] and end at stop block on the Bottom Side Pulley - LH [**31**].

Tools Required:
- 7/32” Allen Key & 9/16” Wrench
- **28-B**: Re-install Plastic Cable Retainers on **both** Bottom Side Pulley Assemblies and both Side Peanut Pulleys. Fully Tighten.

28-A

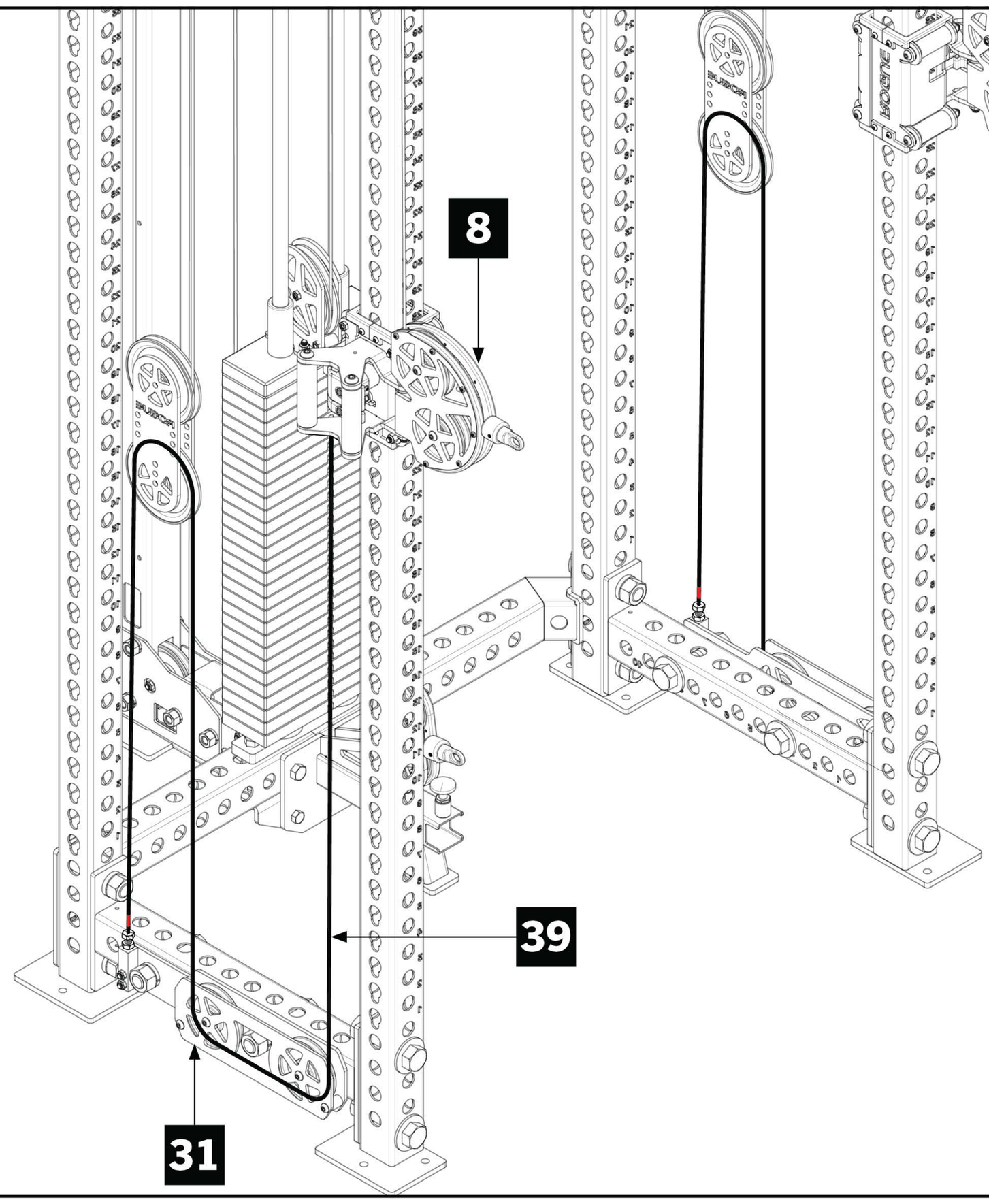

28-B

STEP 29

Tools Required:

- 1-1/2” Wrenches, 1/8” Allen Key
- Place Key Washer over the Key Nut on the Plate Storage Post shown in **Detail** view.
- Assemble Plate Storage Pins [**40**] on rear Monster Uprights at desired hole heights.
- Slide Plate Storage Spacers [**41**] all the way down Plate Storage Pins with the set screws oriented on the bottom of Spacers as shown in **29-C**.
- Fully tighten set screws using 1/8” Allen Key.

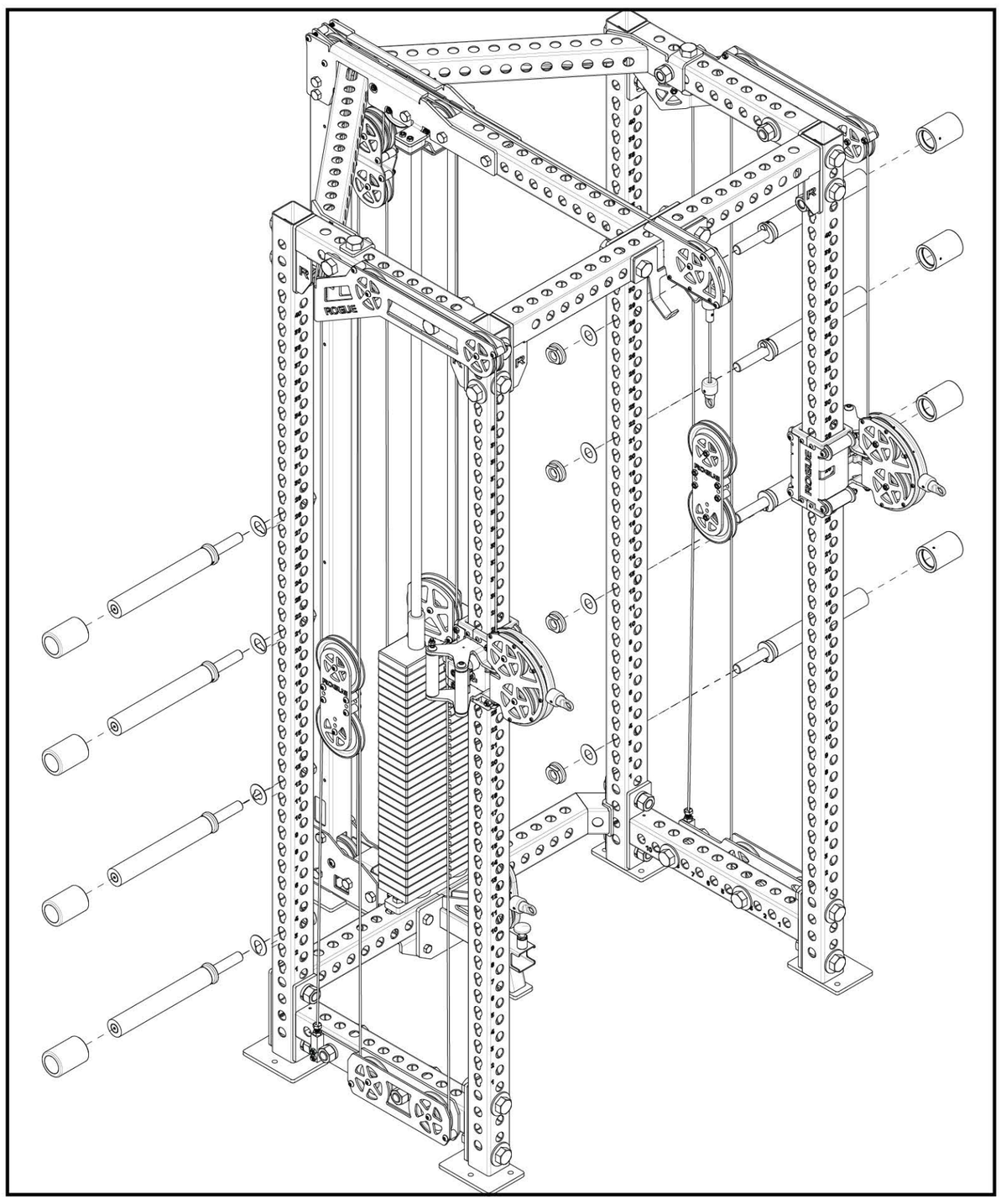

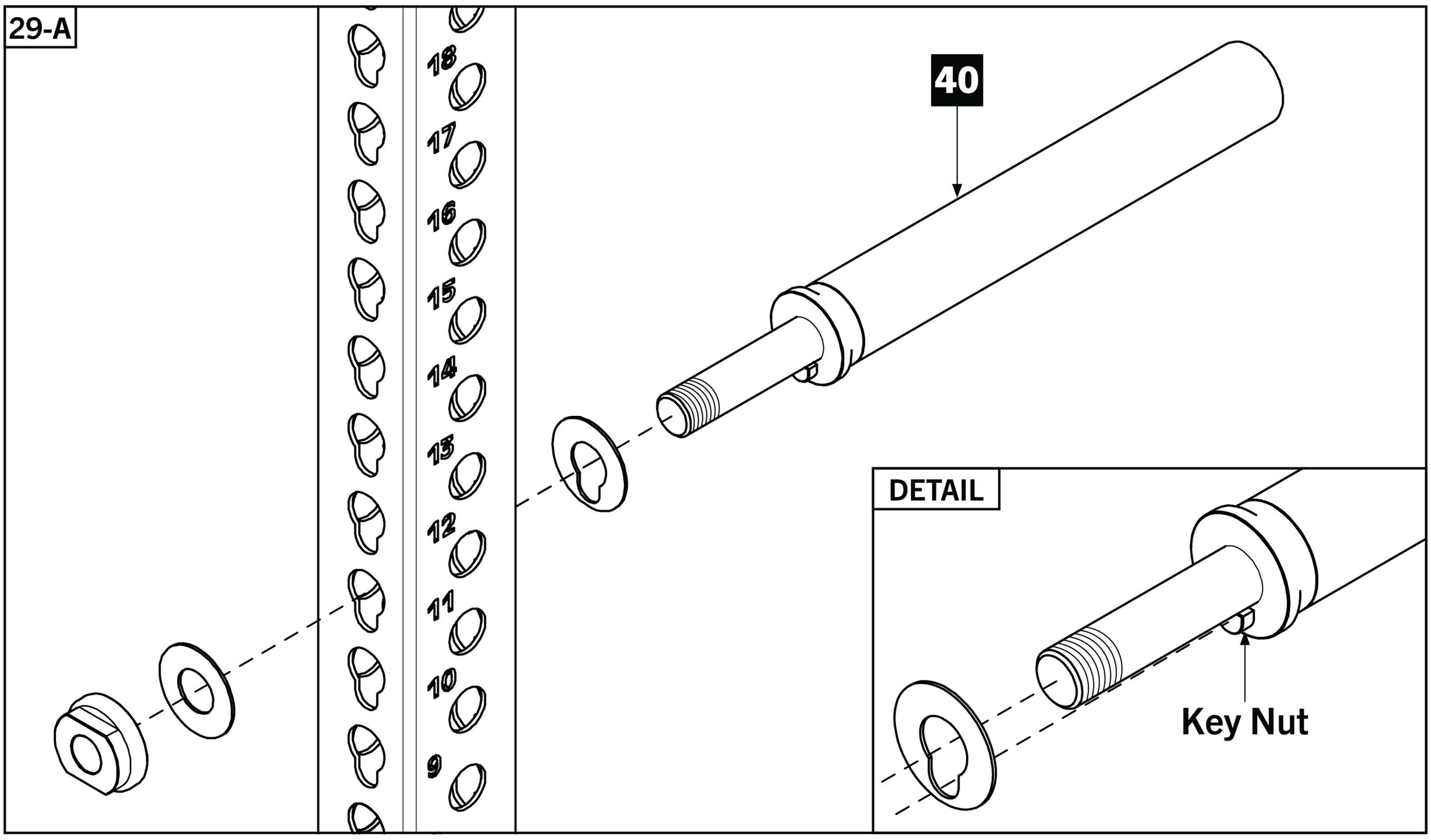

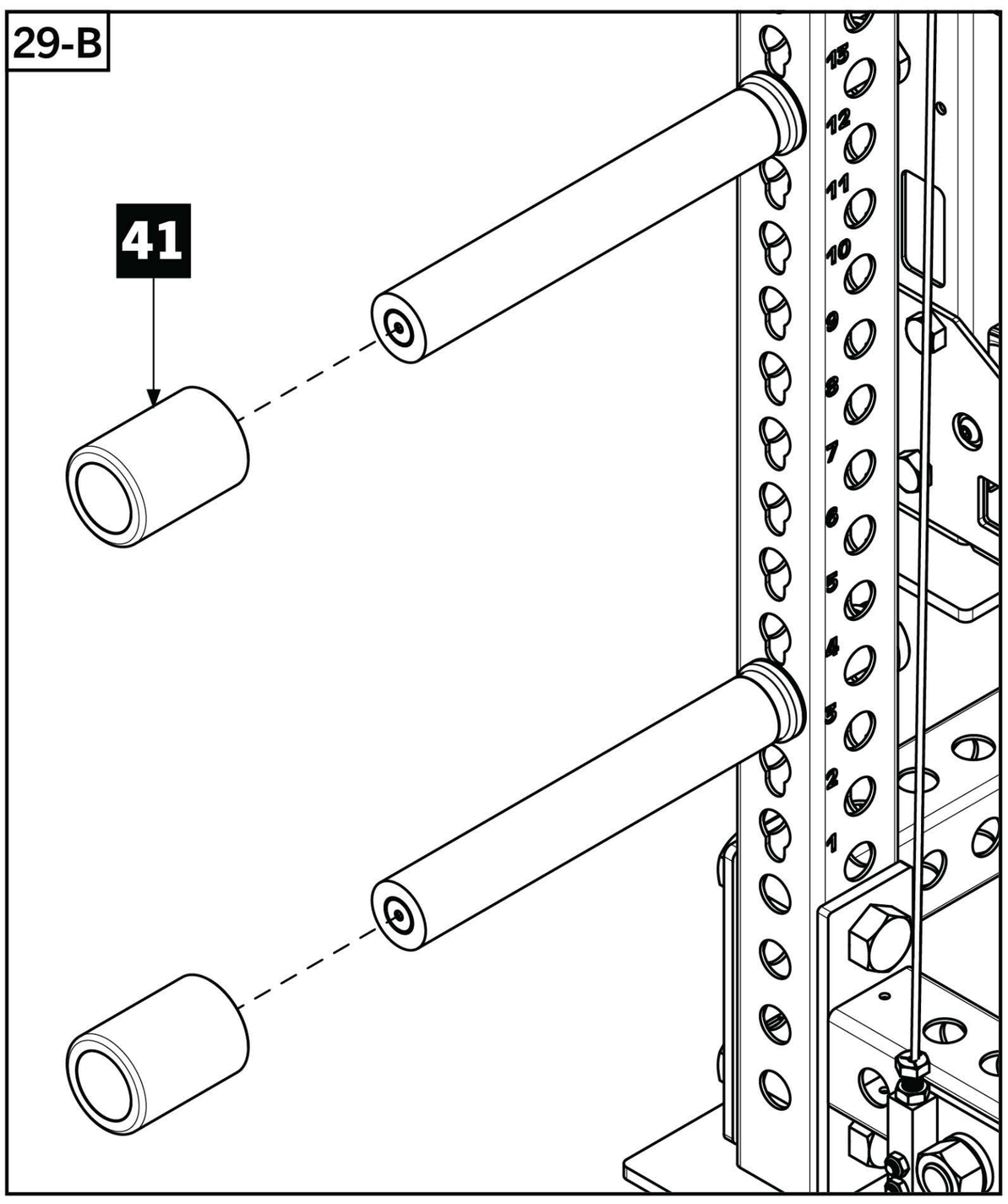

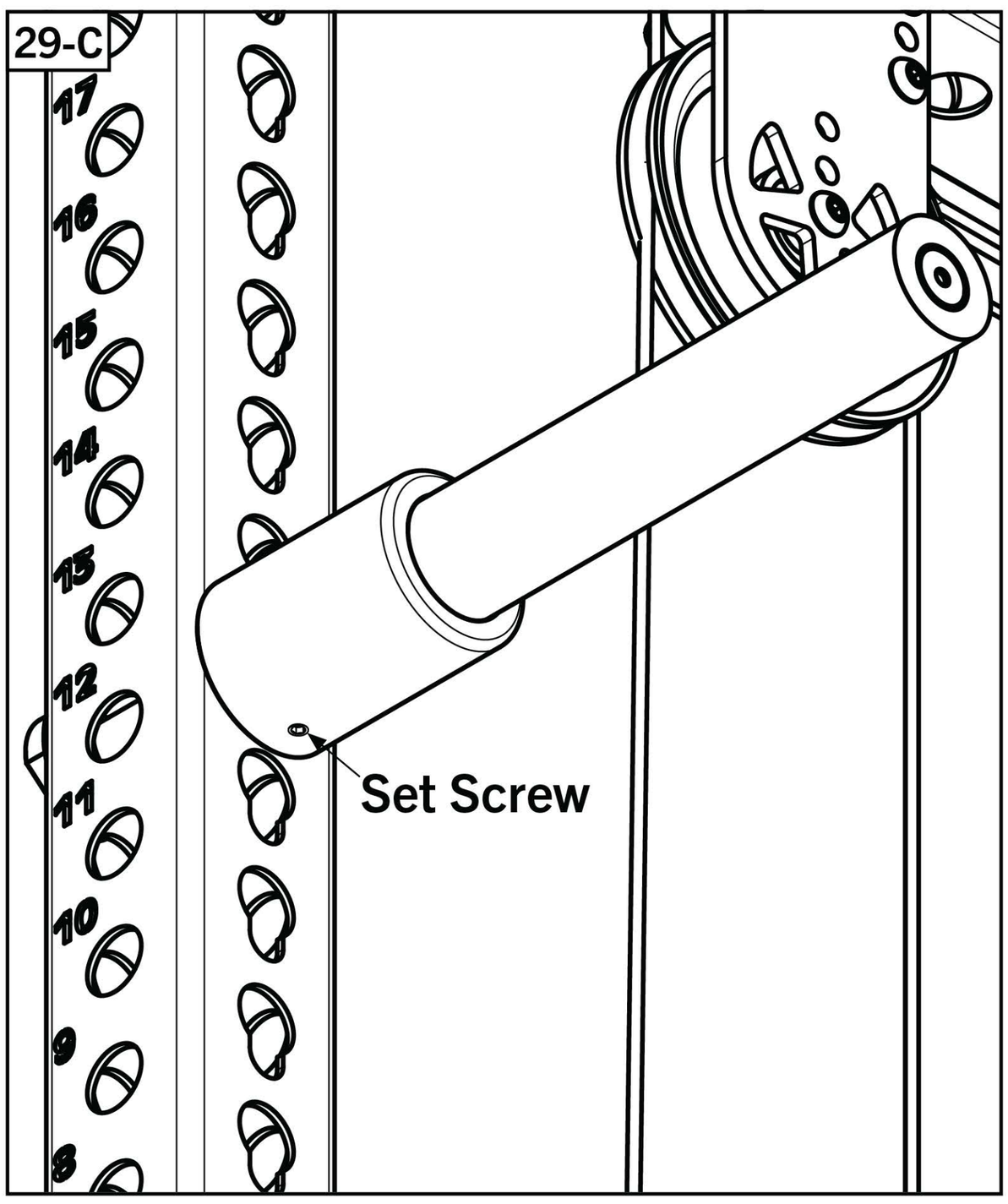

STEP 30

Tools Required:

- All
- Tighten ALL loose hardware on the entire rack.
- Starting with no weight selected on the Weight Stack, check cables by pulling on each clevis.
- If cables are too tight or loose, adjust accordingly by loosening or tightening the lower 1/2” Jam Nuts on Low Side Cables [**39**].

30-A

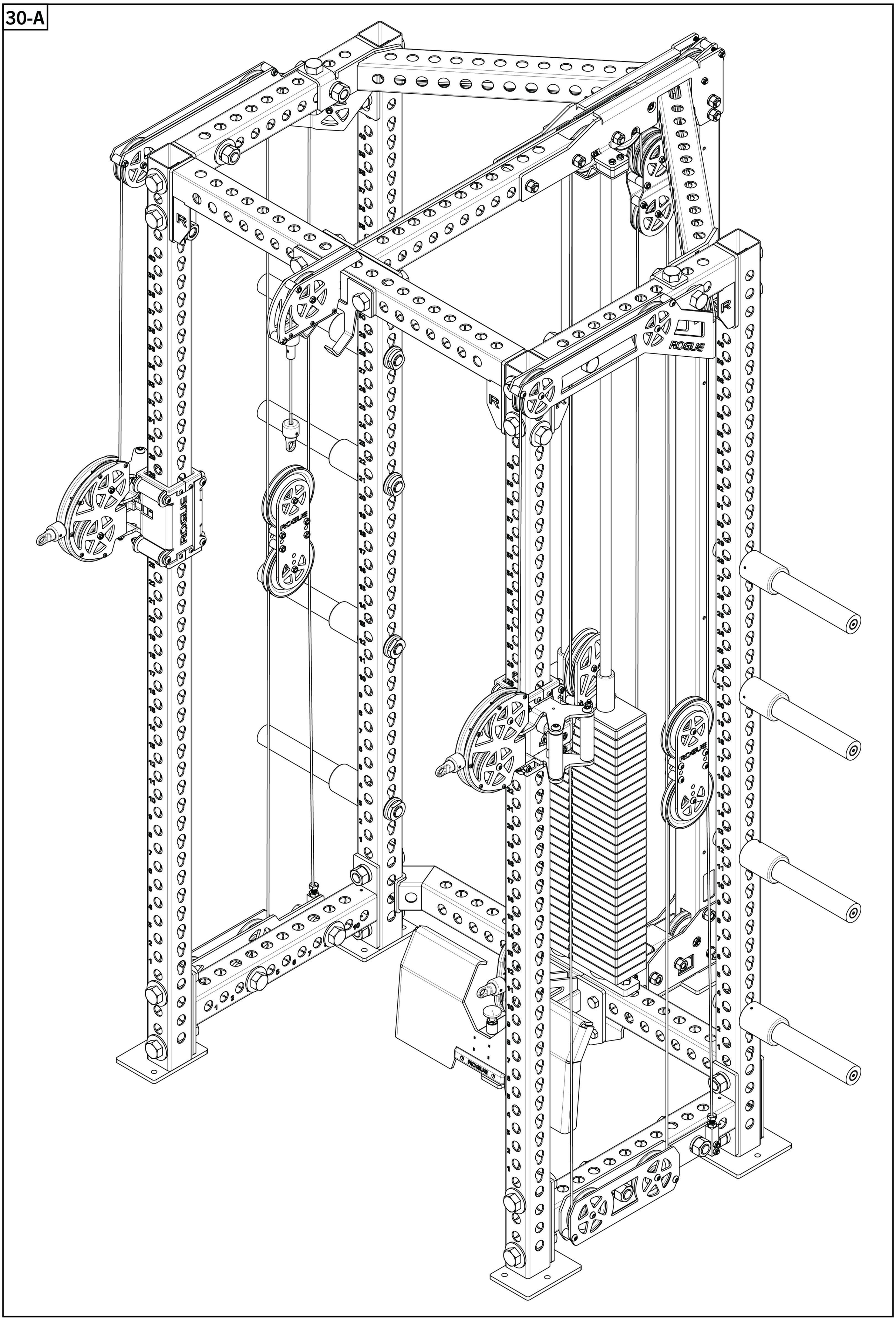

STEP 31

- Apply the Weight Stack Number Labels [**36**] on the front of the Weight Stack Plates, approximately 3.5” from the edge of plates.
- Attach key ring on Selector Pin Lanyard [**23**] to front hole on pulley plate of the Weight Stack Stem [**21**]. Do not insert pin into Weight Stack Plate yet.
- Attach Single Handle Attachments [**44**] to Swivel Trolleys using included Carabiners.
- Attach Lat Bar [**42**] to Lat Pull down clevis attachment point.
- Re-insert the Footplate into Low Row Footplate Assembly [**17**] and attach Standard Grip Triangle [**43**] to clevis.

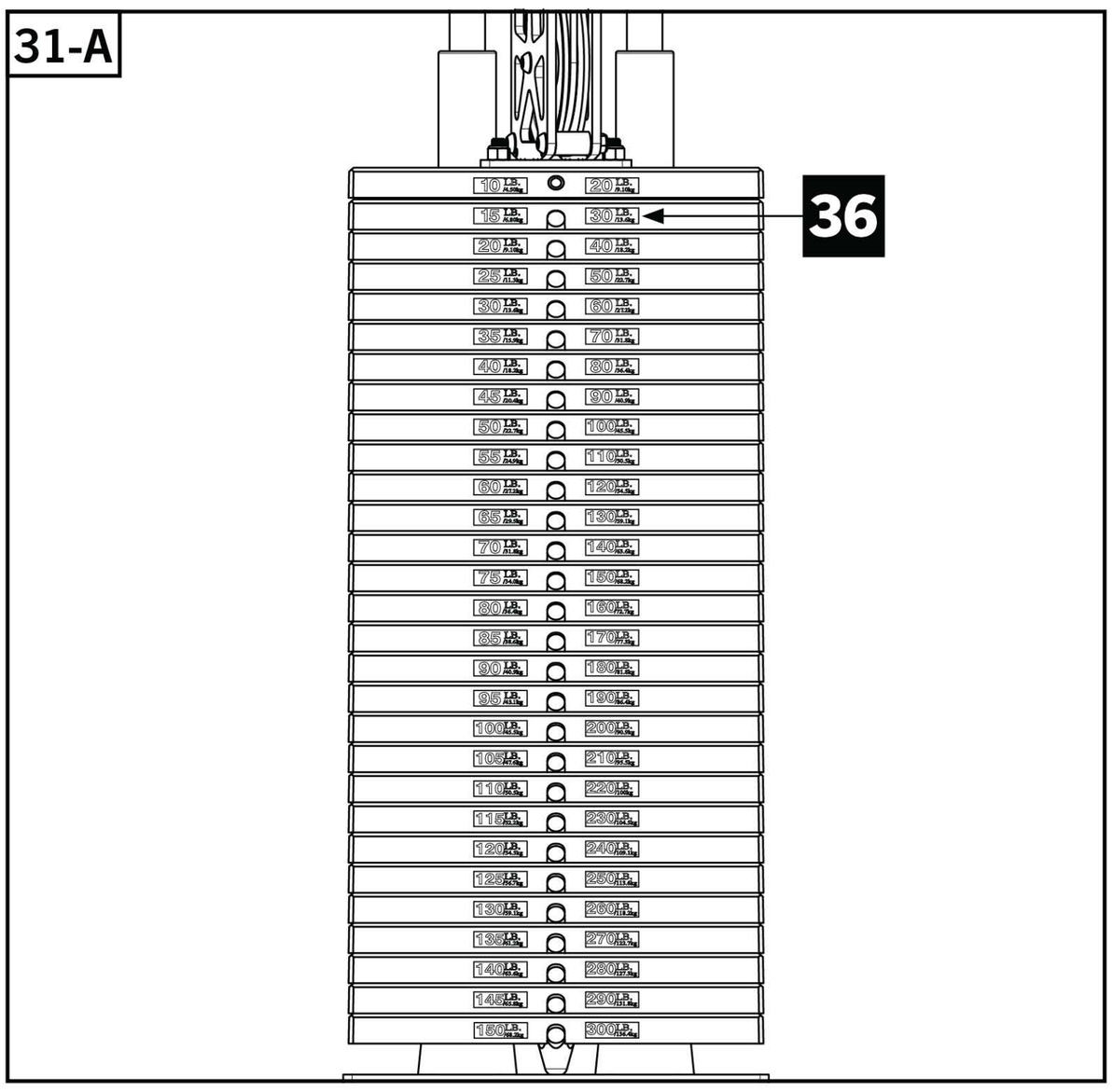

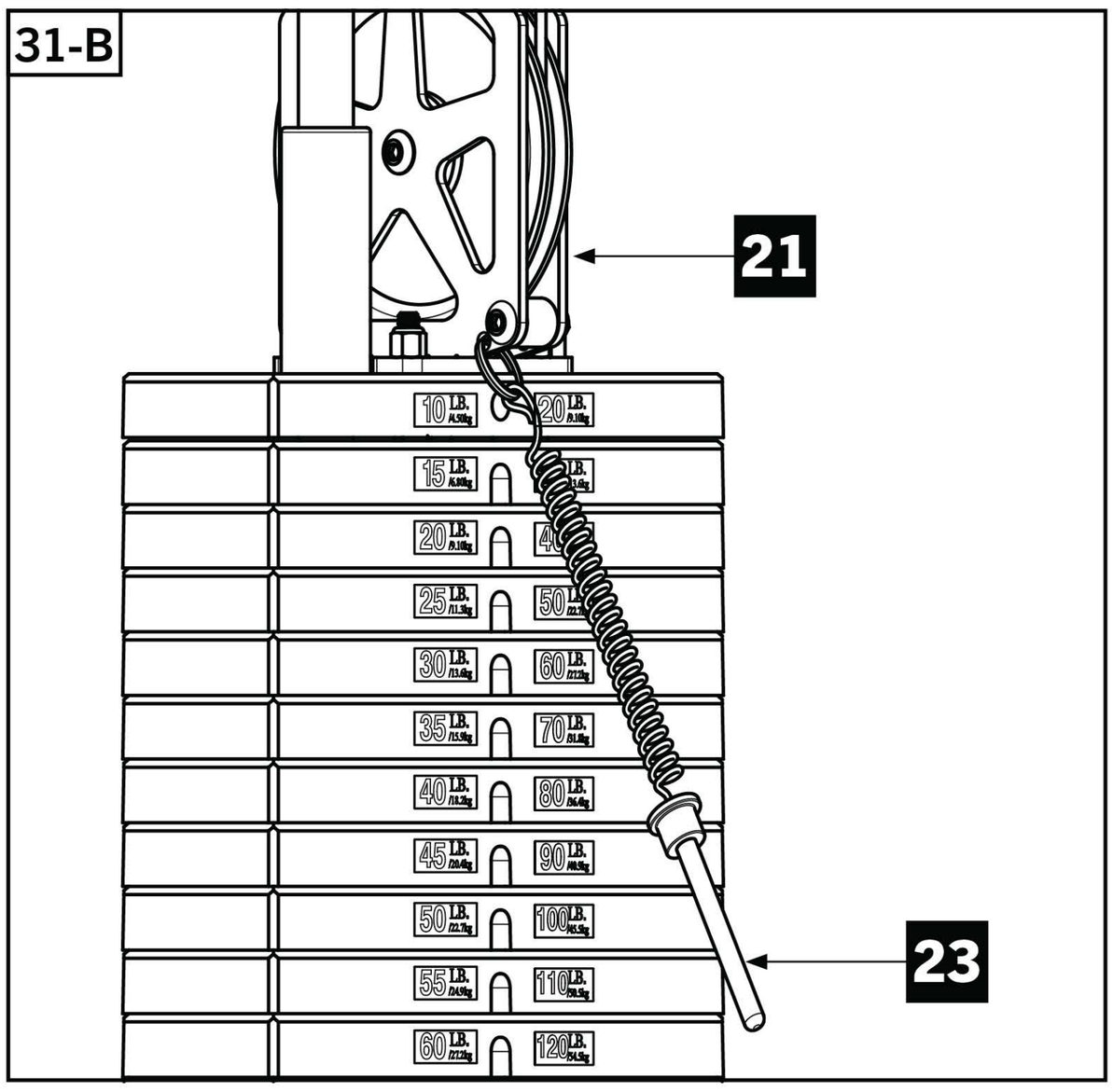

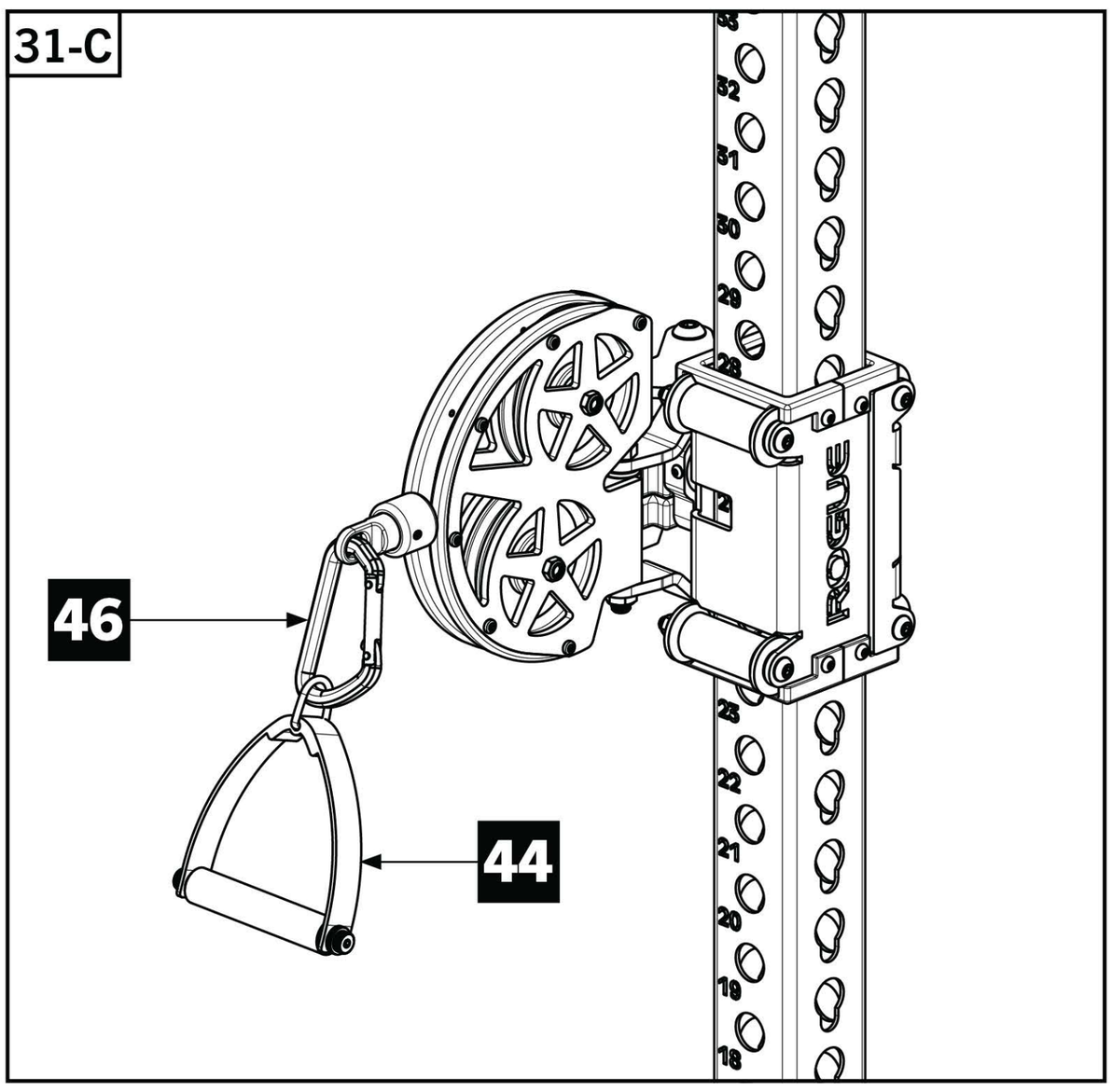

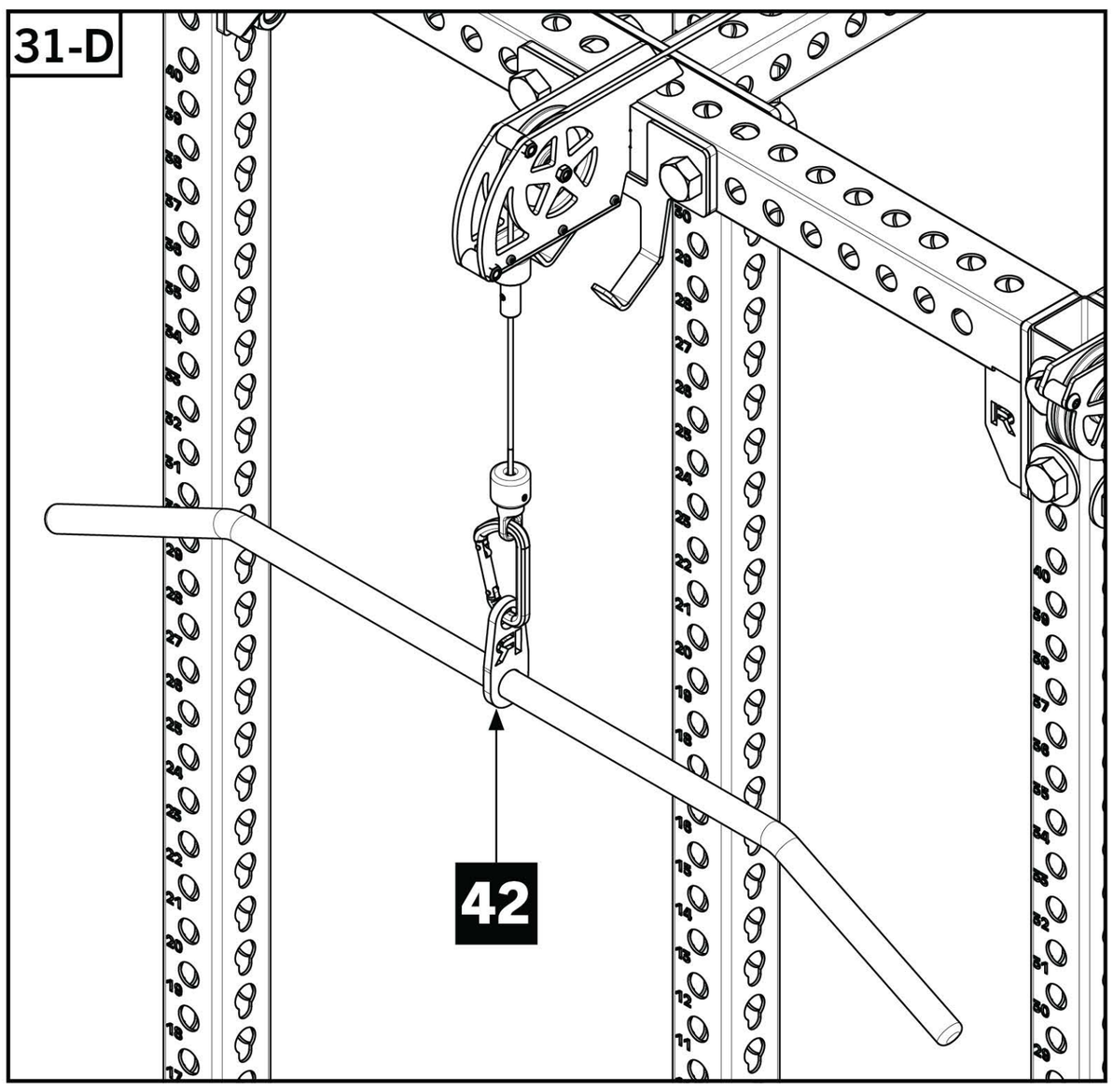

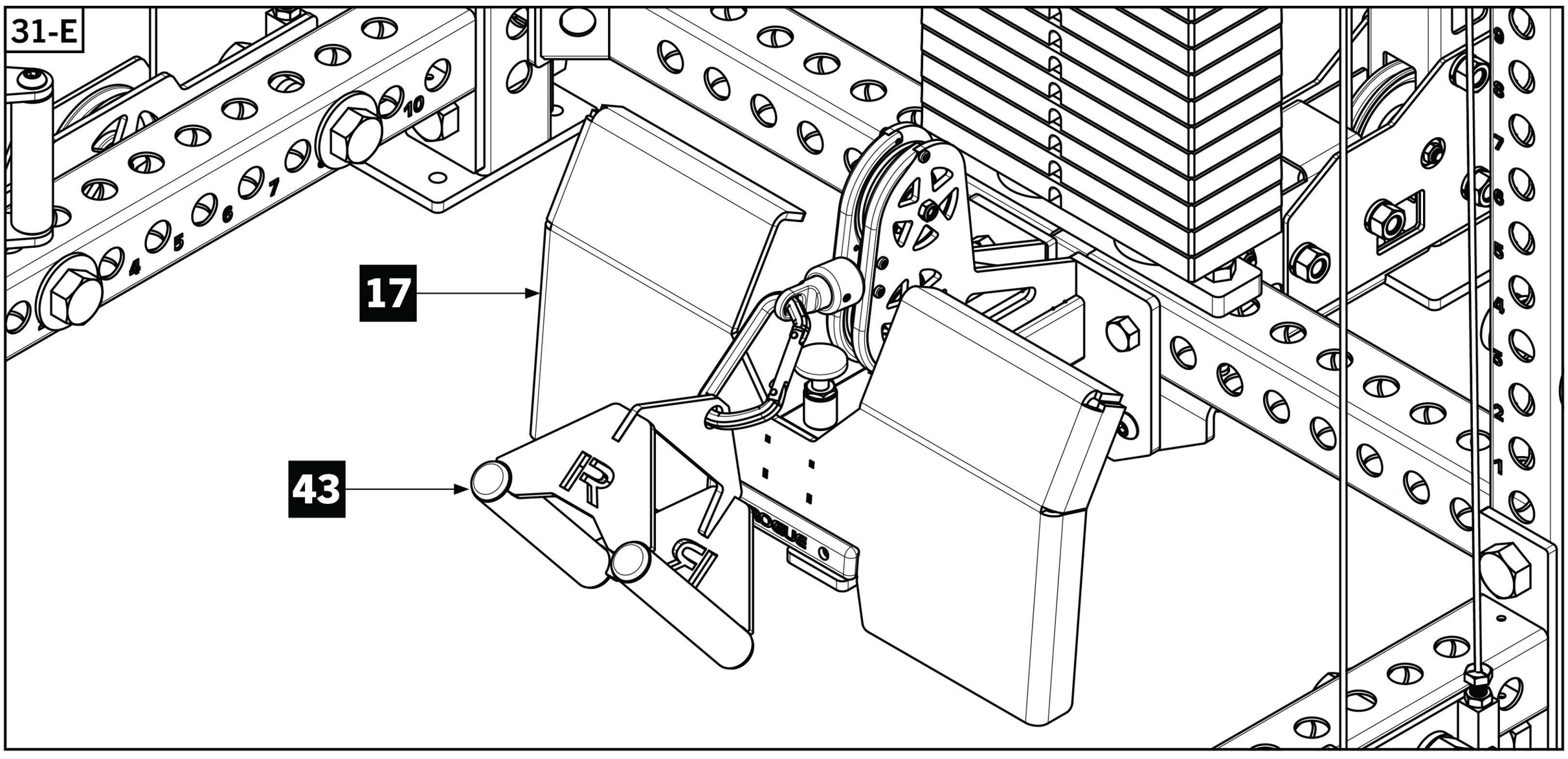

STEP 32 (SHROUD ASSEMBLY)

- Align Weight Stack Shroud RH [**66**] and Weight Stack Shroud LH [**67**] with corresponding holes on Rear 3X3 Upright [**2**] and bolt Shrouds to Upright using 1/4” x 3-1/2” Button Head Screws [**79**] and 1/4” Nylock Nuts [**81**].
- Align top holes on Shrouds to the front side of Top Rear Angle Crossmembers and bolt together using 1/4” x 3-1/2” Button Head Screws and 1/4” Nylock Nuts.
- Align and bolt the bottom holes on Shrouds to the corresponding holes on Weight Stack Shroud Bottom Bracket [**68**] using 1/4” x 5/8” Button Head Screws [**80**].

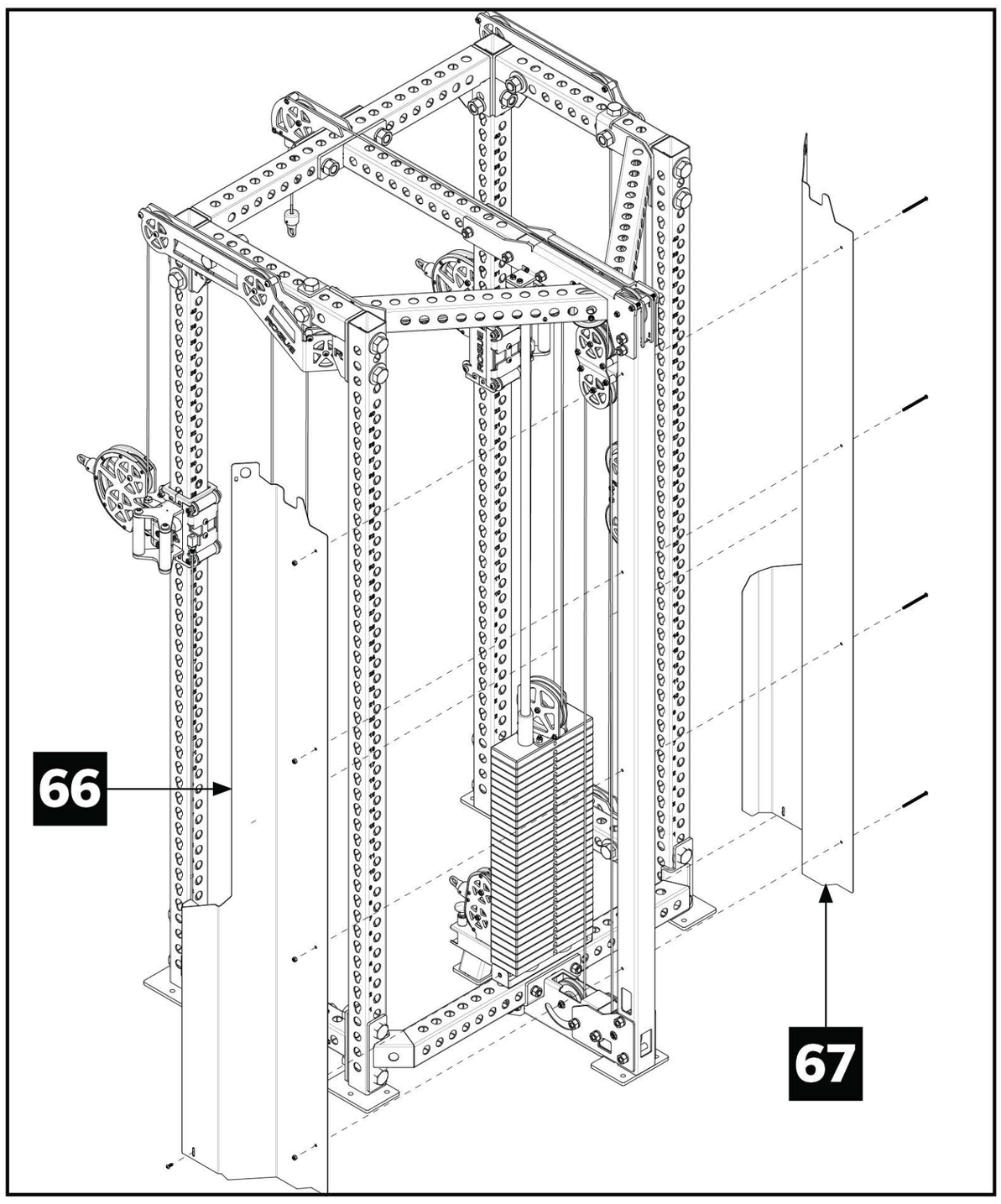

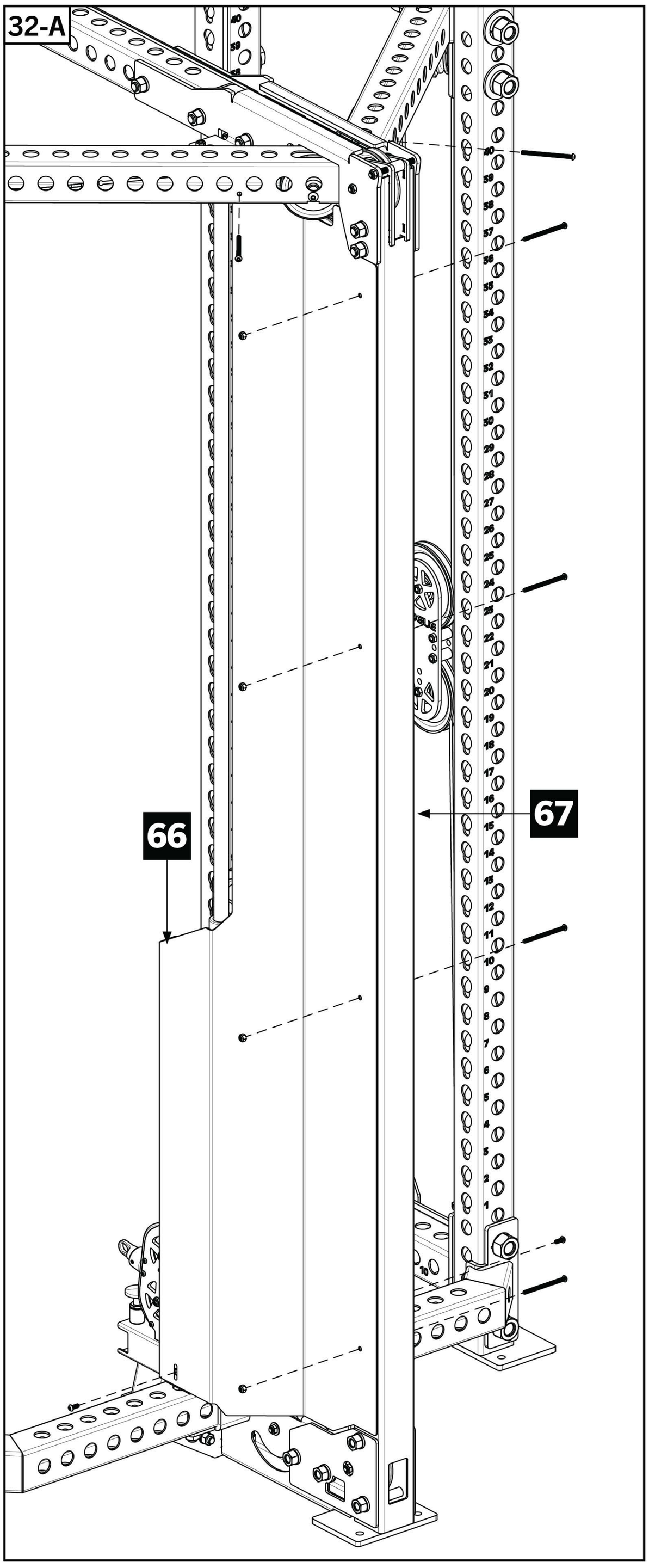

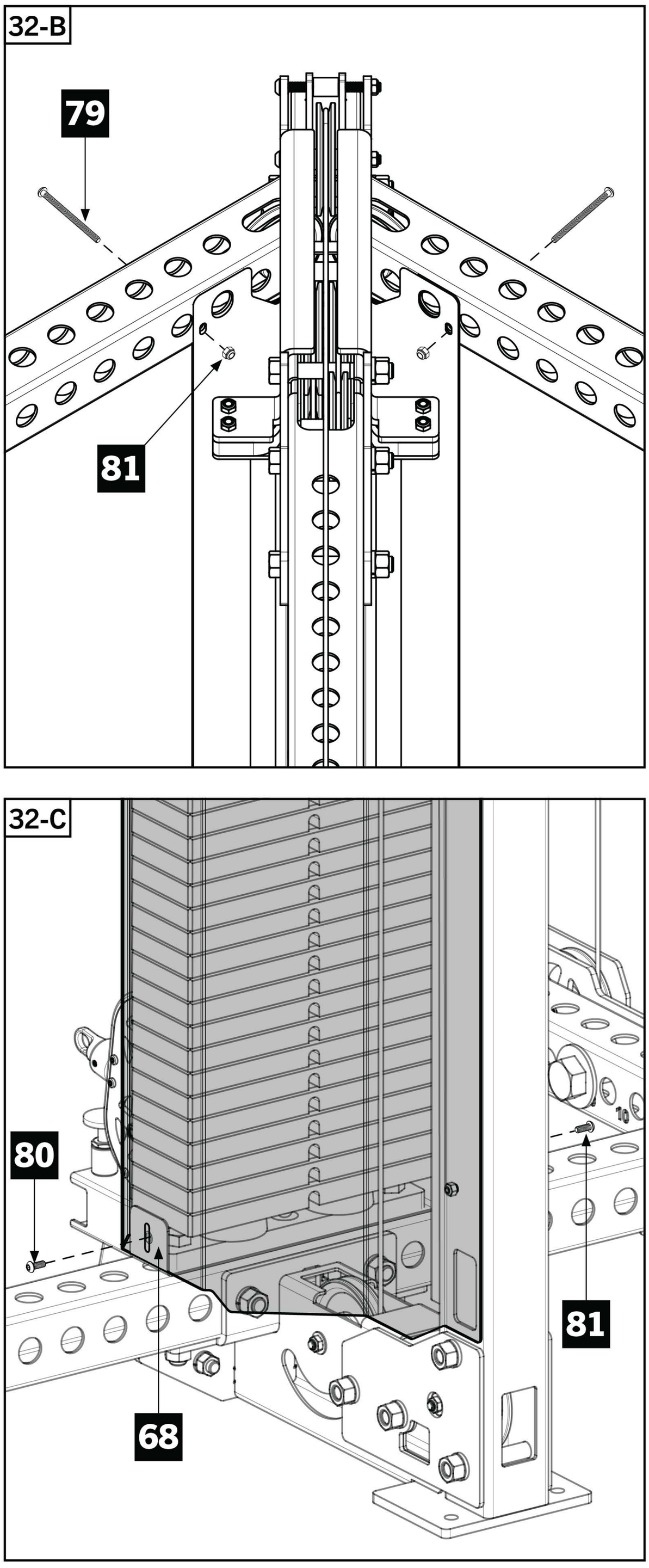

STEP 33 (SHROUD ASSEMBLY)

- Align the 6” Foam Panel [**84**] to the middle panel of the Side Shroud - RH [**69**] centering it between all sides. Peel off the adhesive backing and stick the 6” Foam to the middle panel.
- Place the 3” Foam Panels [**83**] on panels to the left and right of the center of the Side Shroud - RH [**69**]. Peel off the adhesive backing and stick the foam to the correct panels shown in **33-B** and **33-C**.
- Repeat the whole process for the Side Shroud - LH [**70**].

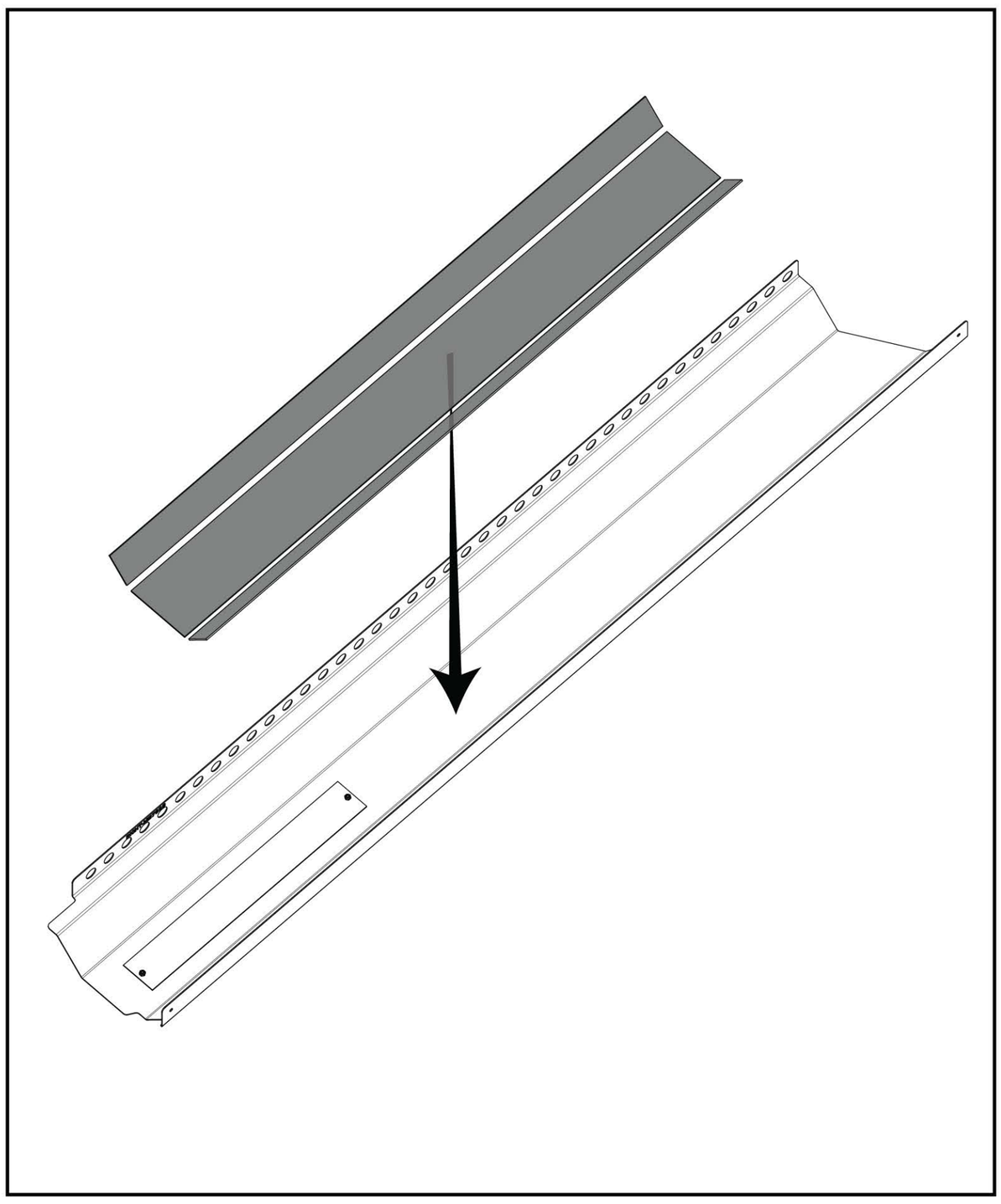

DETAIL

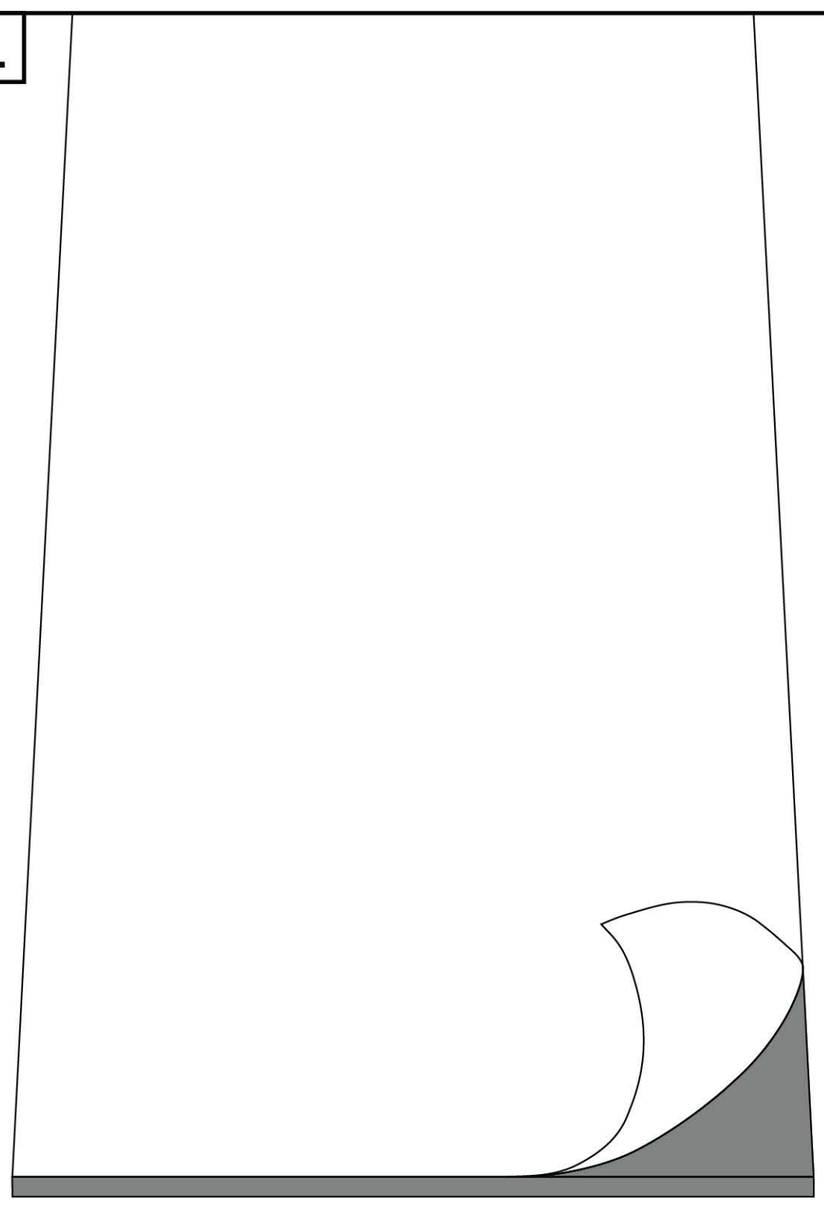

33-A

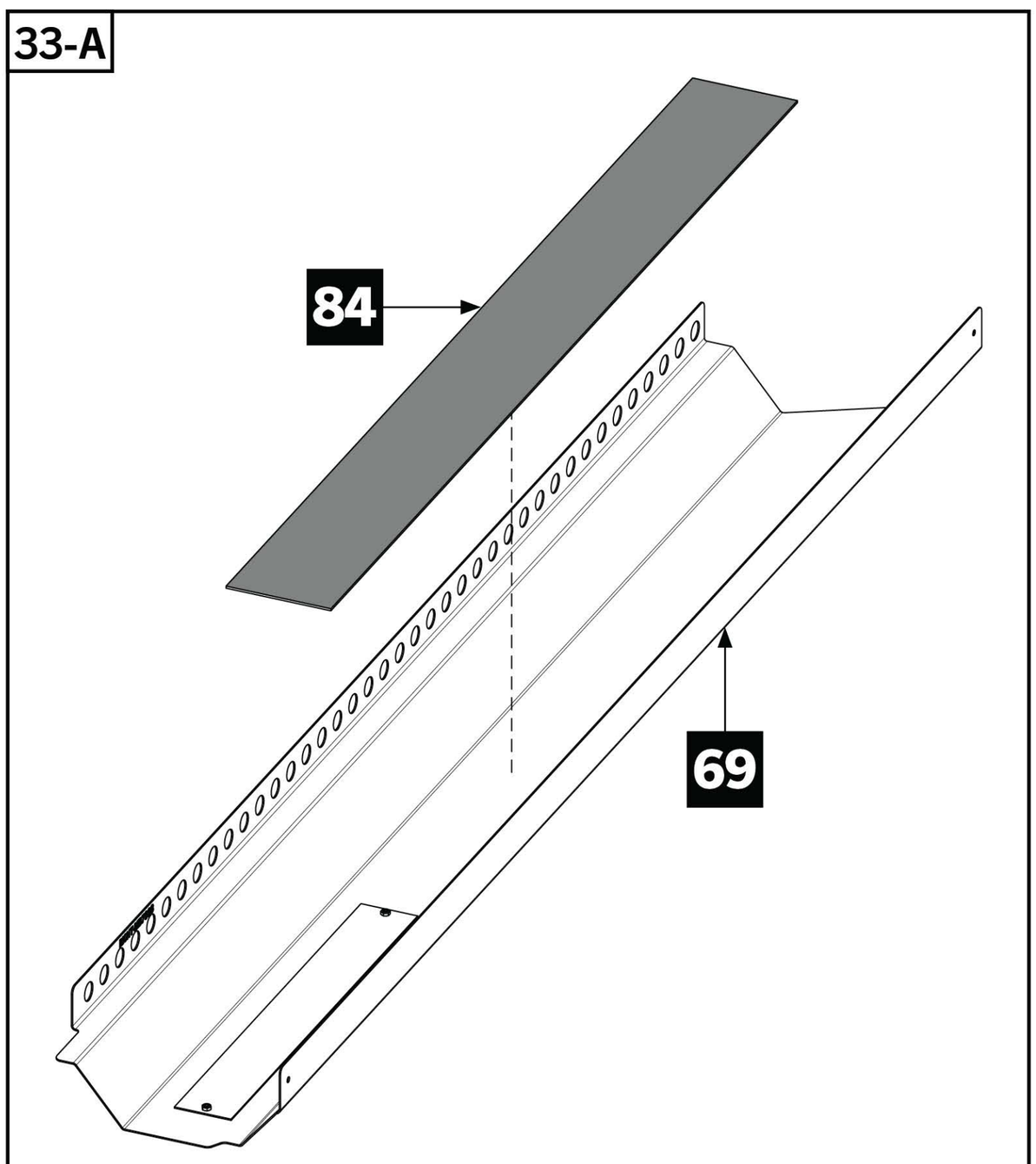

33-B

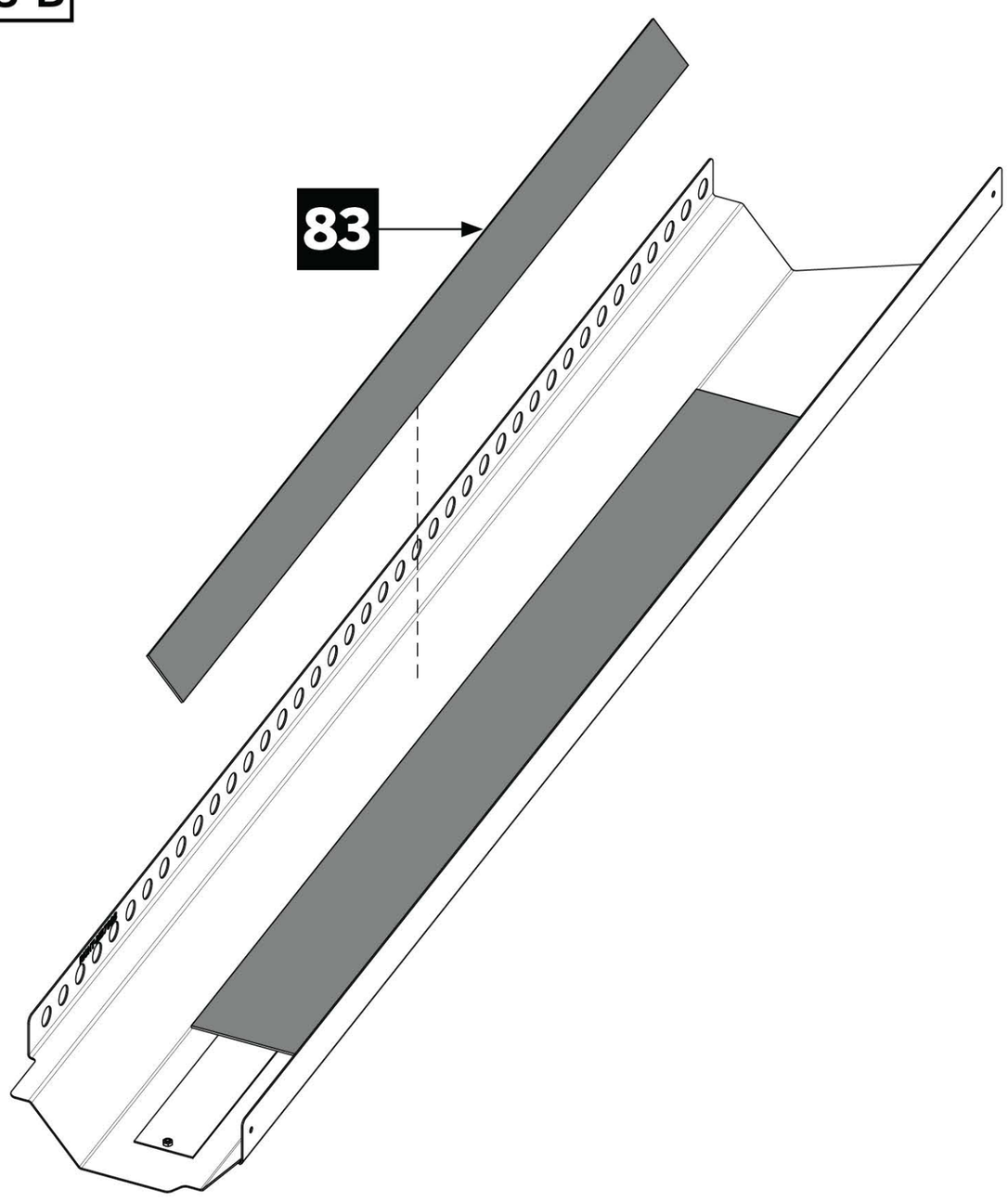

33-C

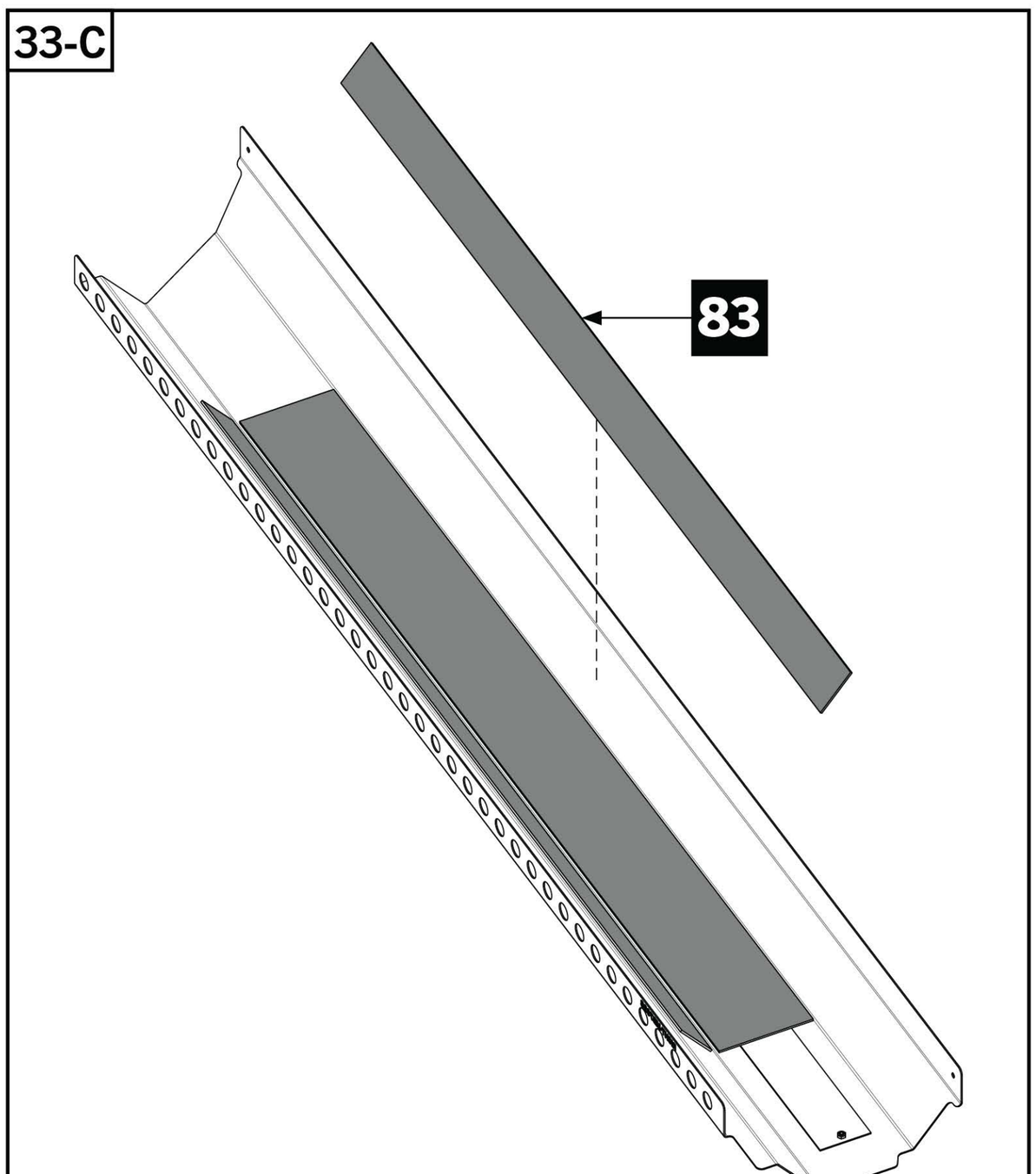

STEP 34 (SHROUD ASSEMBLY)

- Bolt Side Shroud Bottom Brackets [**74**] vertically to 24” Low Crossmember [**5**] in locations shown using 1” x 4-3/4” Hex Bolts [**75**], 1” Flat Washers [**76**], 1” Lock Washers [**77**], and 1” Hex Nuts [**78**].
- Assemble Side Shroud -RH [**69**] and -LH [**70**] on rear uprights of rack using included 1” hardware through the highest and lowest 1” holes on Side Shrouds.

Note:

- Leave the 1” Hex Nuts shown in **34-B** and **34-C** very loose until Storage Panels are assembled on the next step.

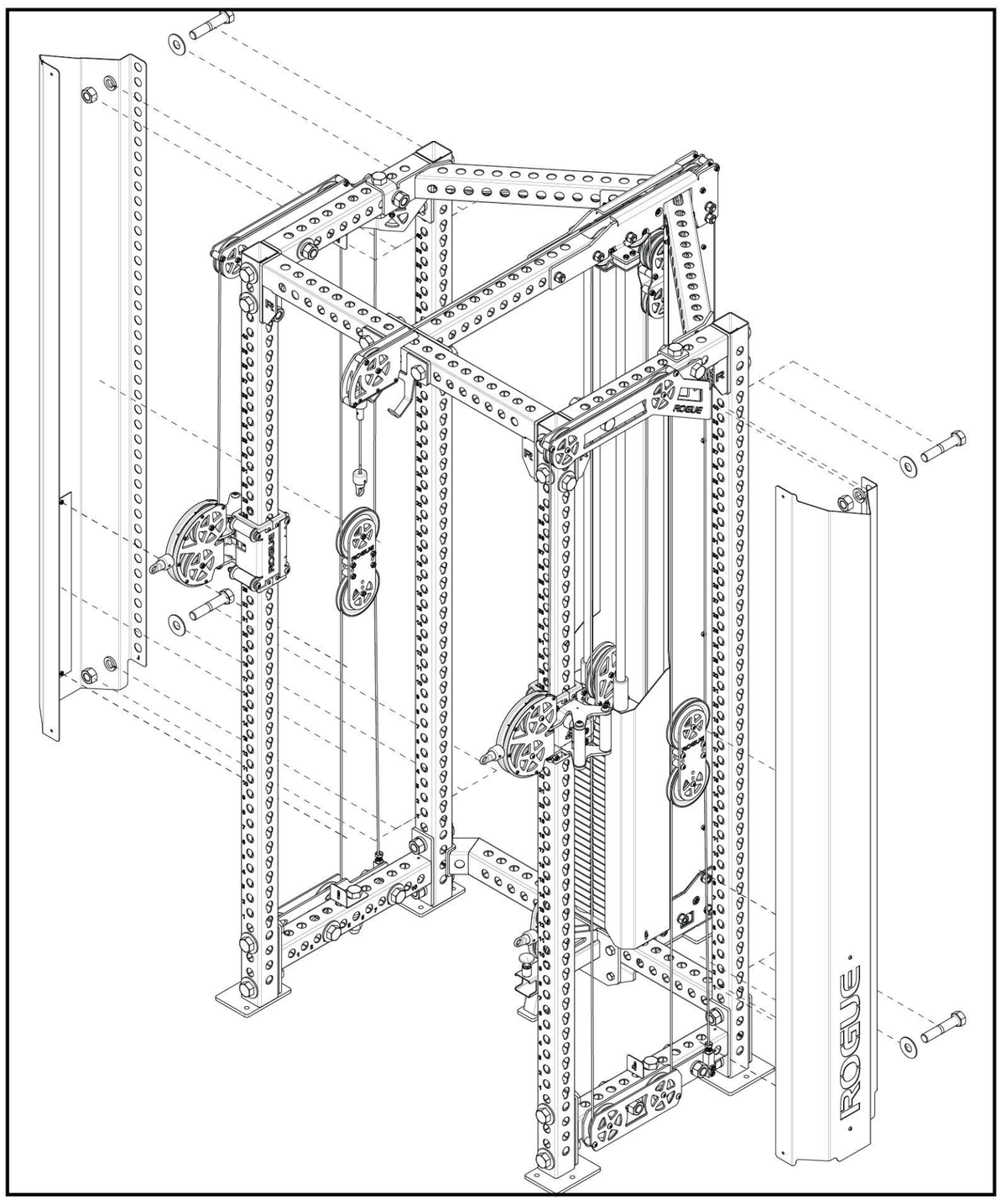

34-A

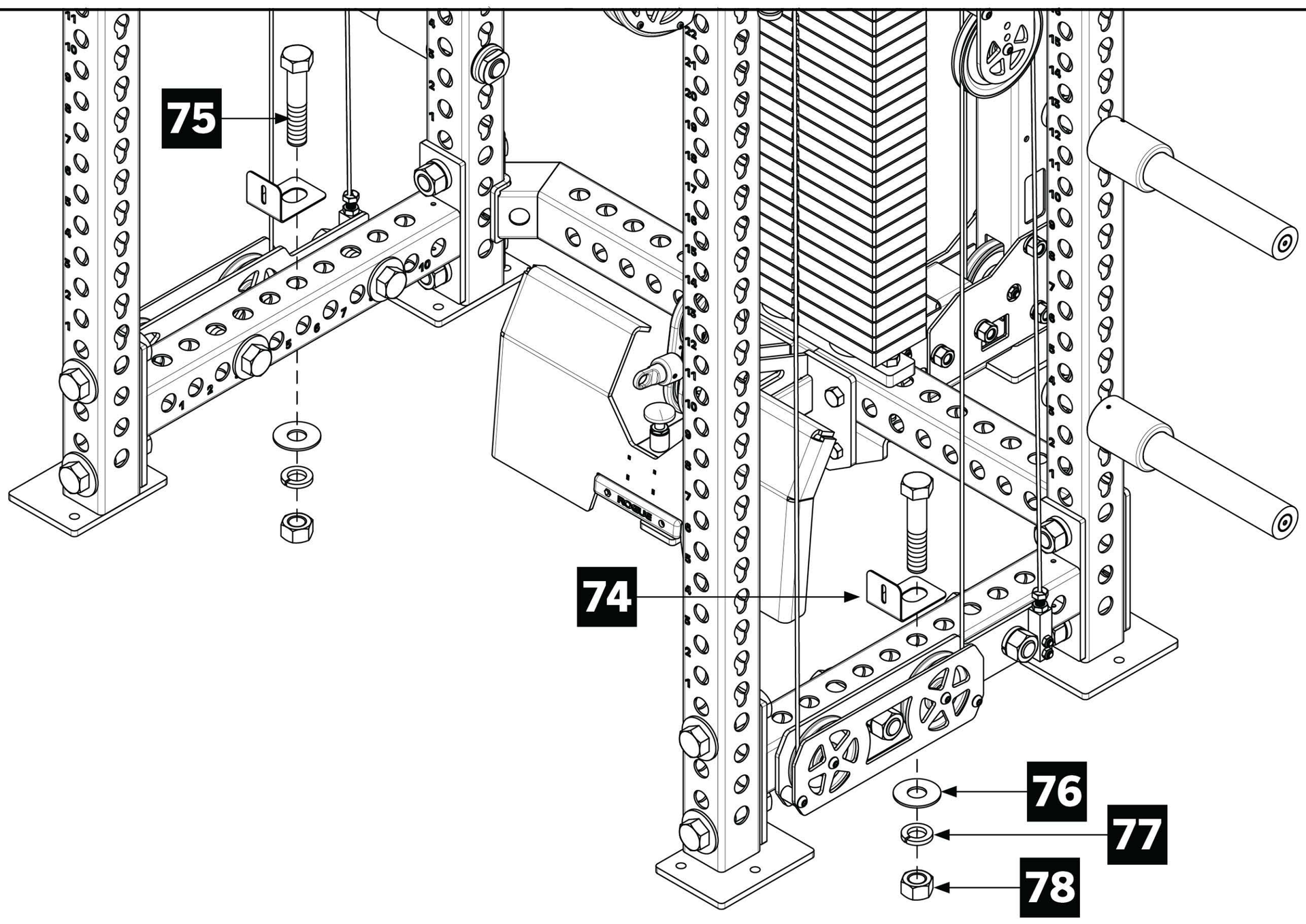

34-B

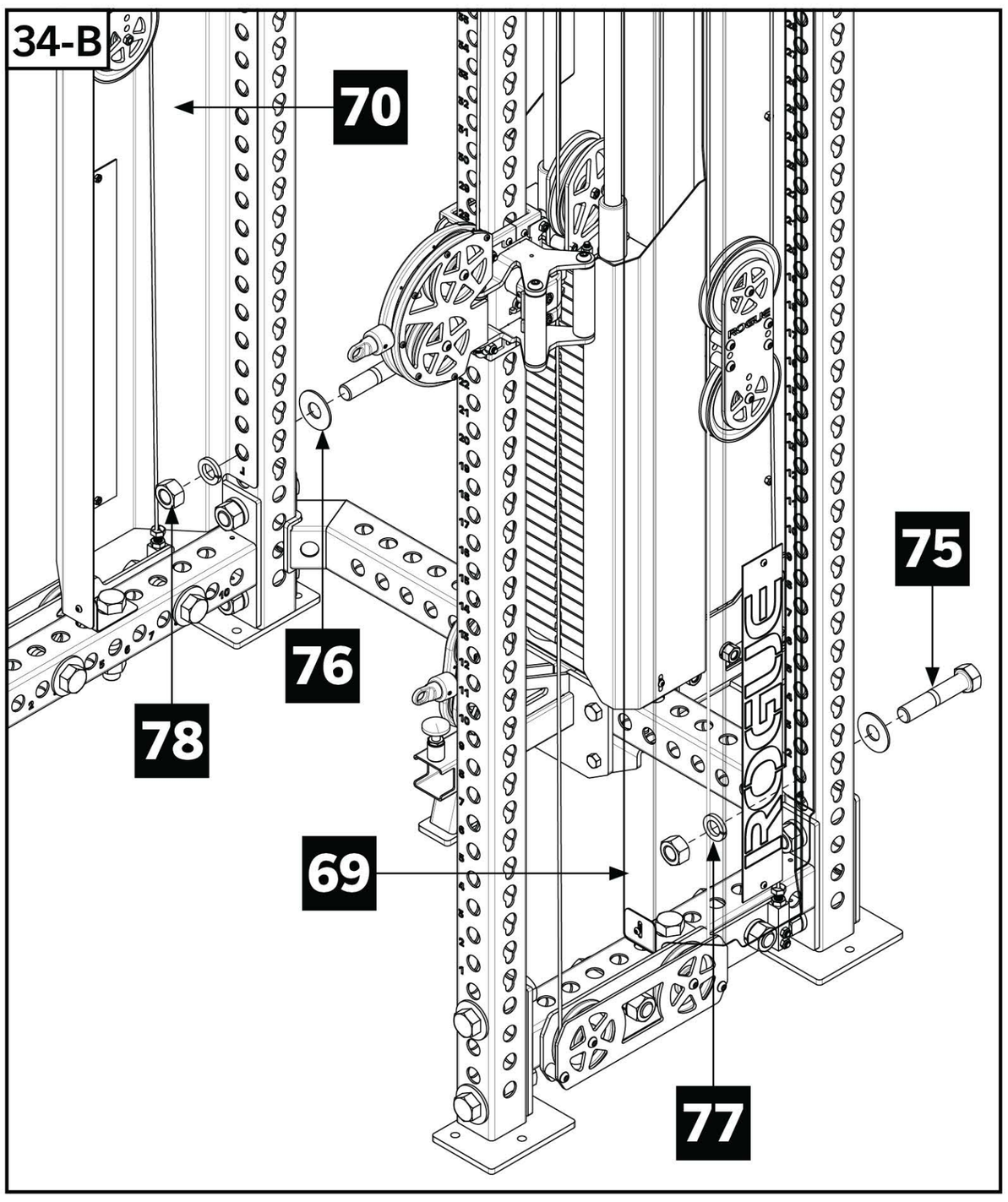

34-C

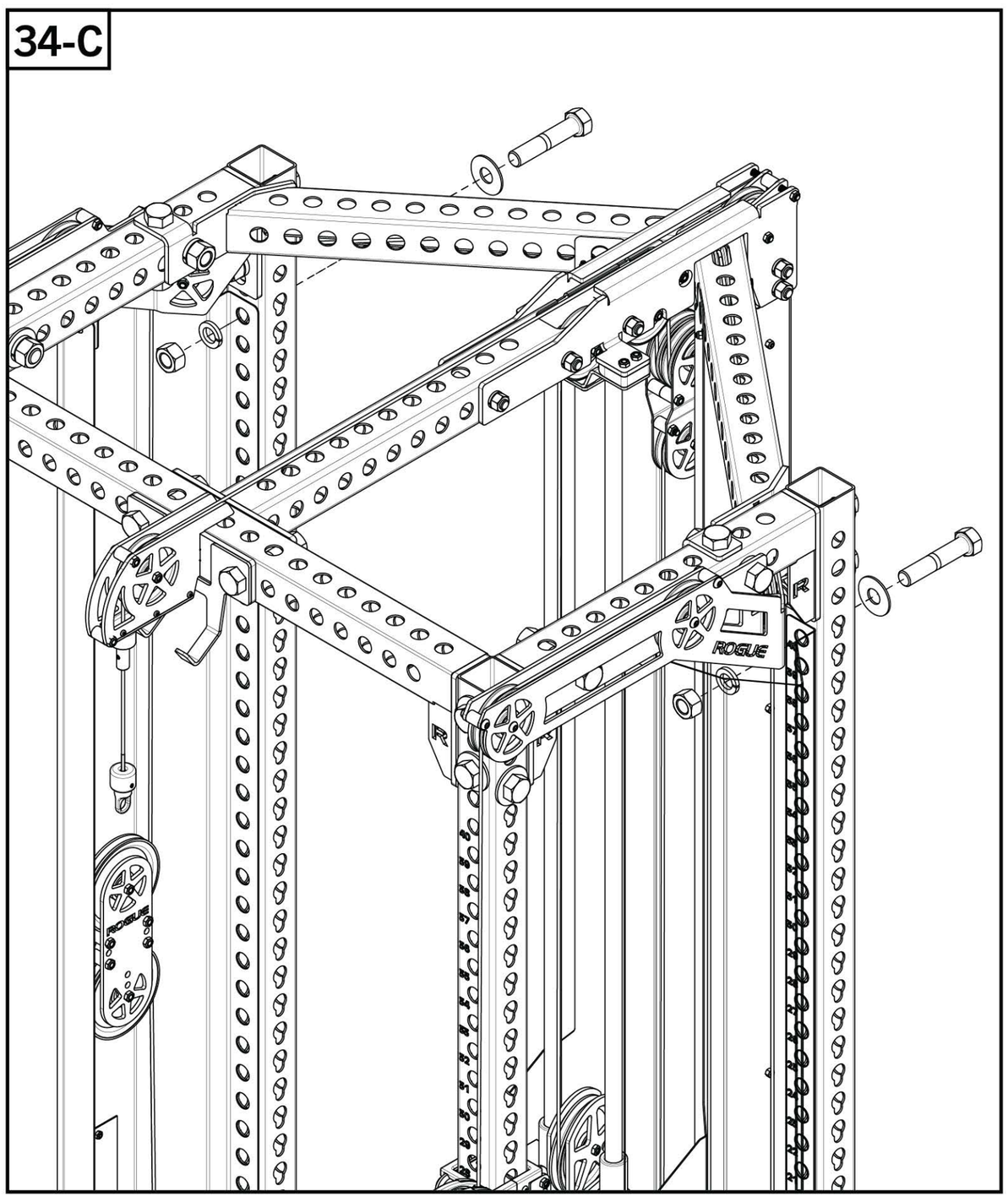

STEP 35 (SHROUD ASSEMBLY)

Tools Required:

- 1-1/2” Wrenches, 5/32” Allen Key, 7/16” Wrench
- Attach rear top and bottom hooks on Storage Panels [**71**],[**72**] to horizontal 1” hardware installed on previous step, and align 1/4” holes on front with 1/4” holes on Side Shrouds and Shroud Brackets.
- Bolt both Side Shrouds and Storage Panels to Bottom Brackets using four 1/4” x 5/8” Button Head Screws [**80**] and four 1/4” Thin Nylock Nuts [**82**].
- Fully tighten all Shroud Kit hardware.

Note:

- Only the LH Storage Panel shown below. Repeat steps below to assemble the RH Storage Panel onto Side Shroud RH.

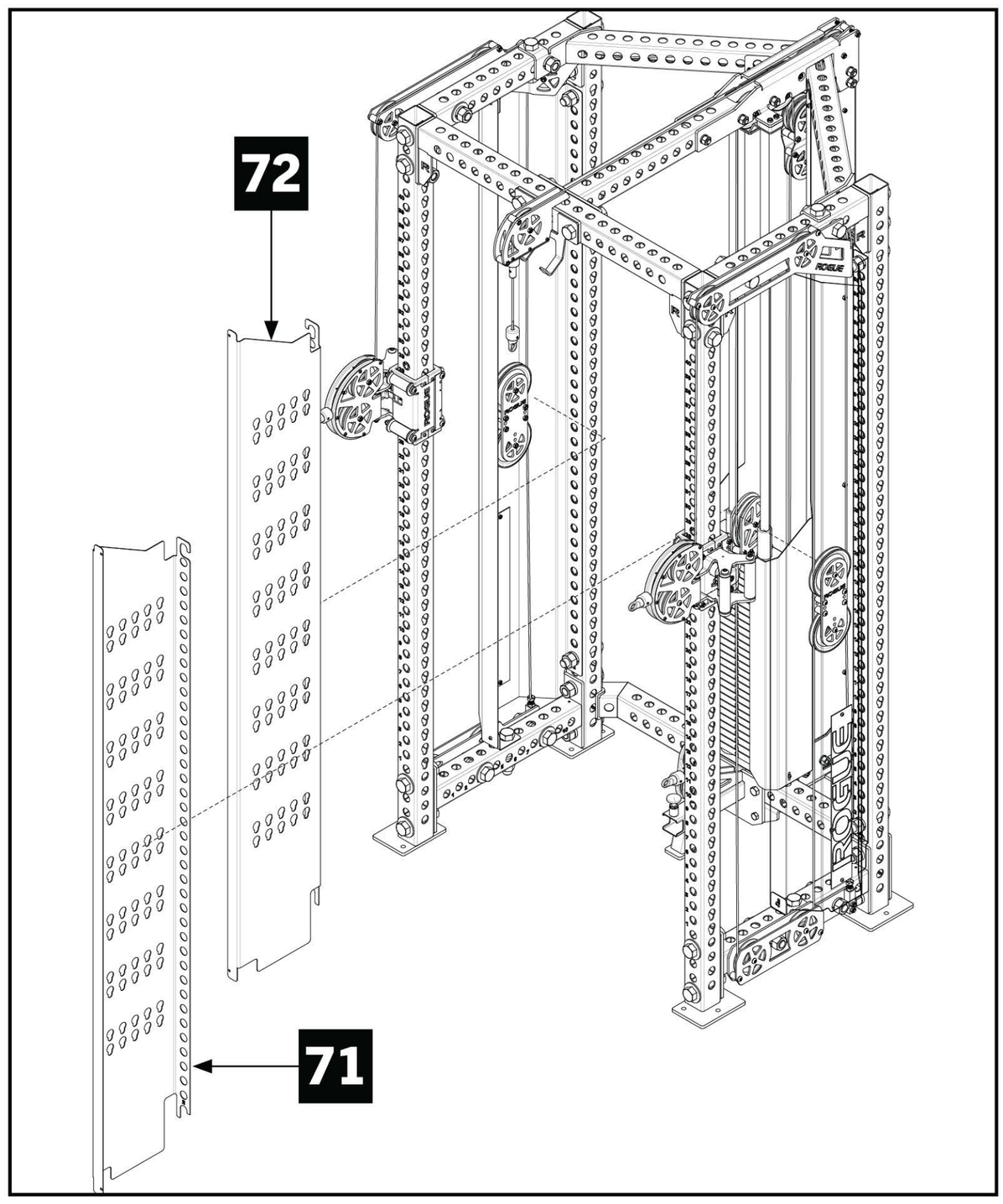

35-A

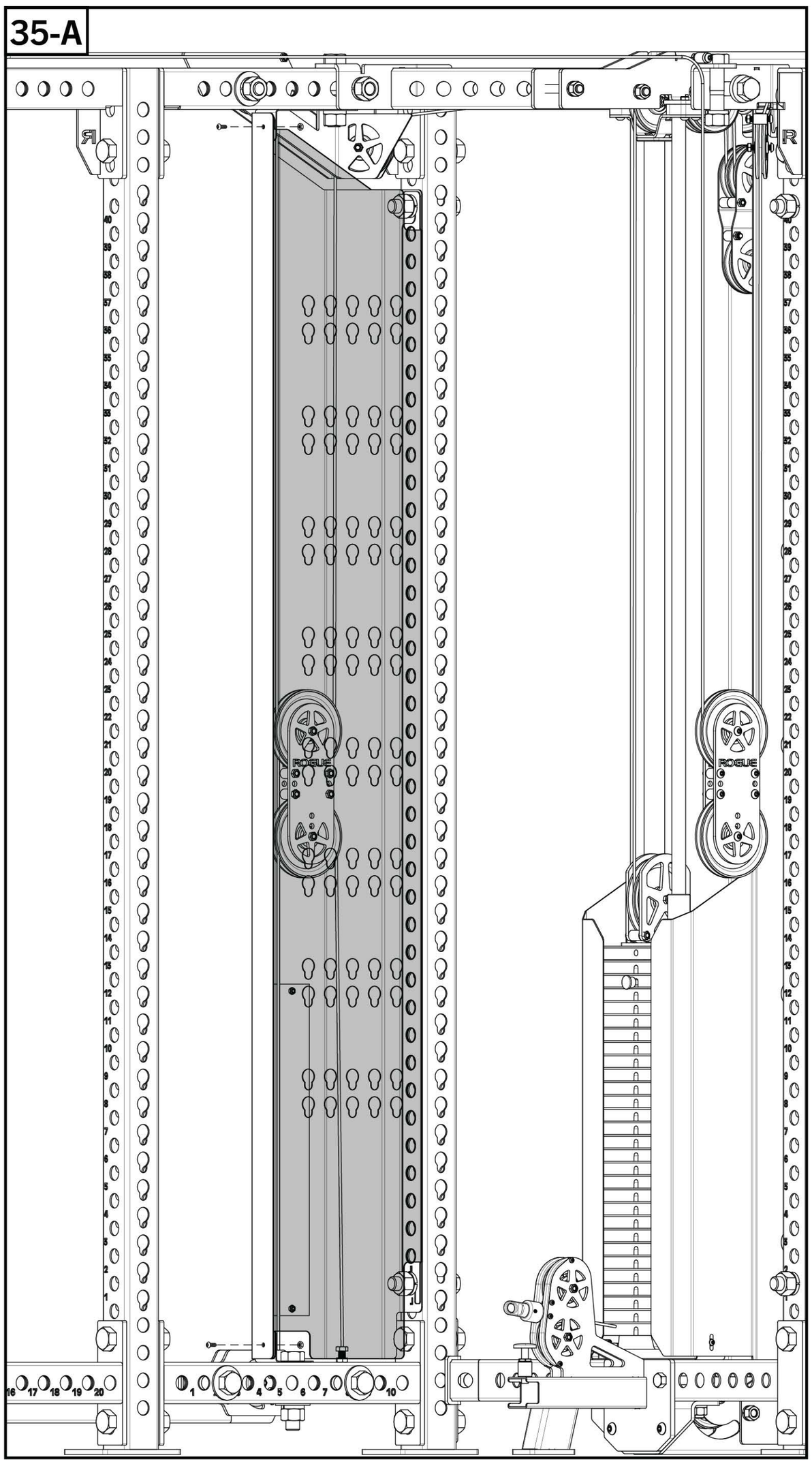

35-B

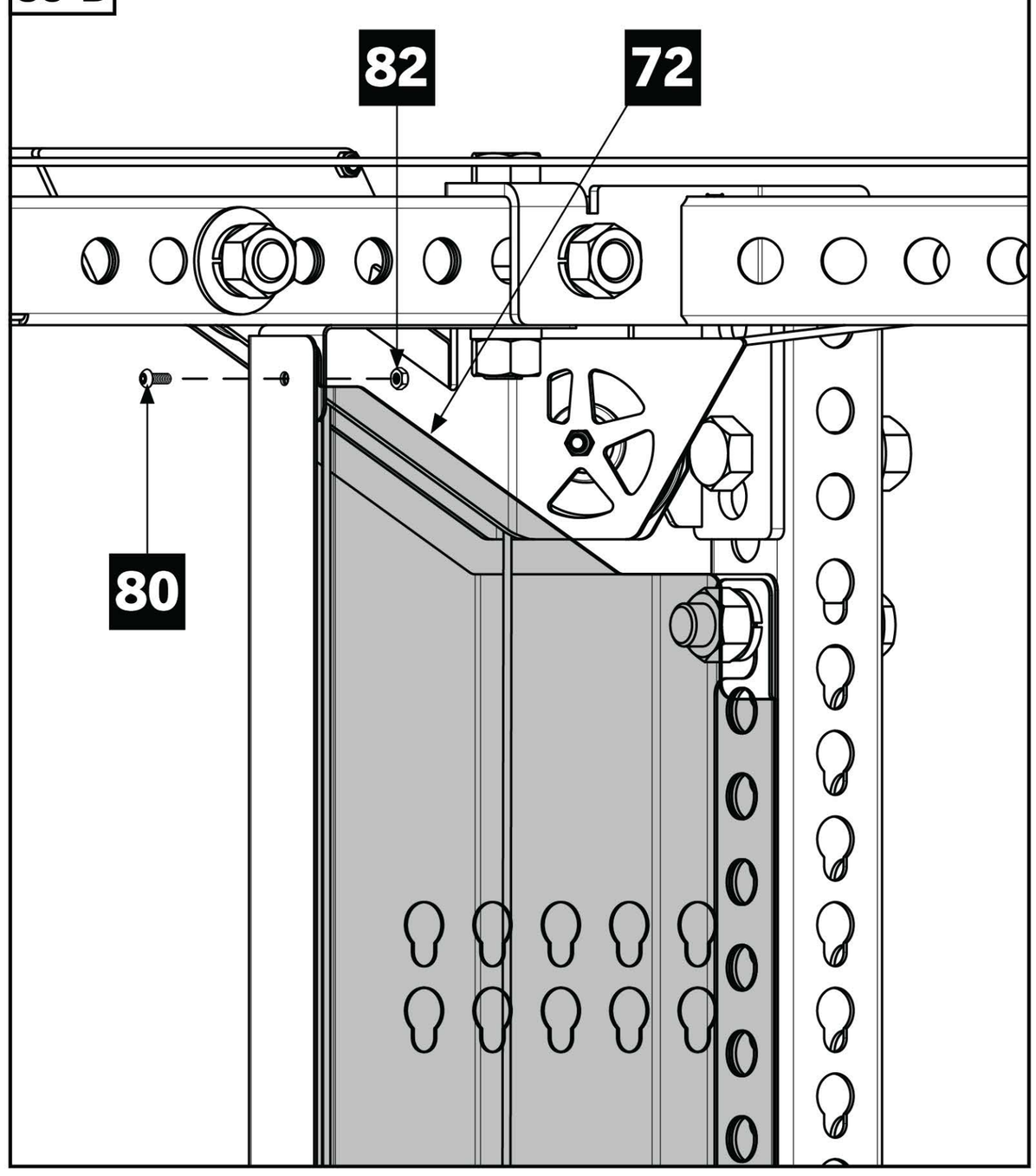

35-C

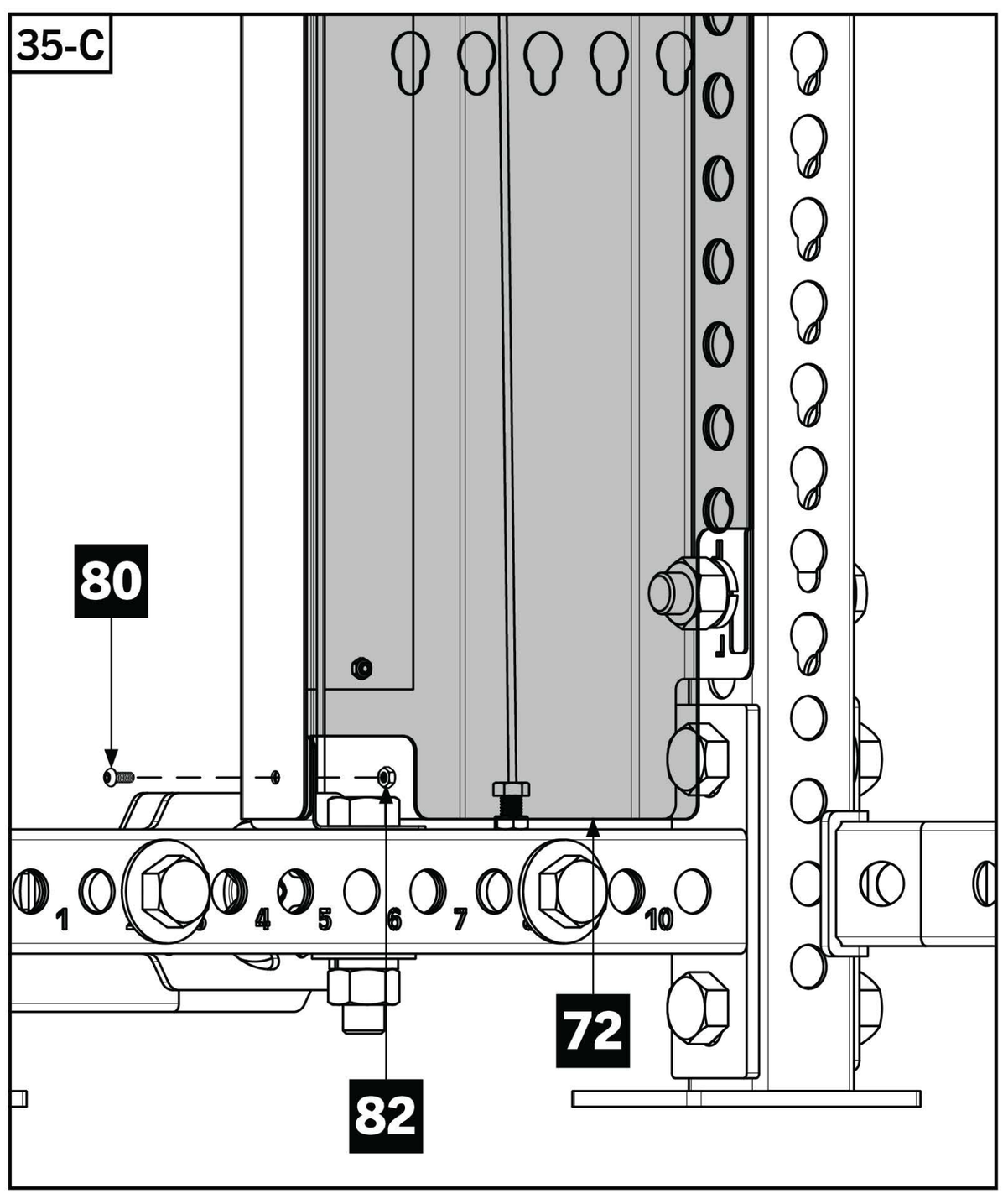

DETAIL

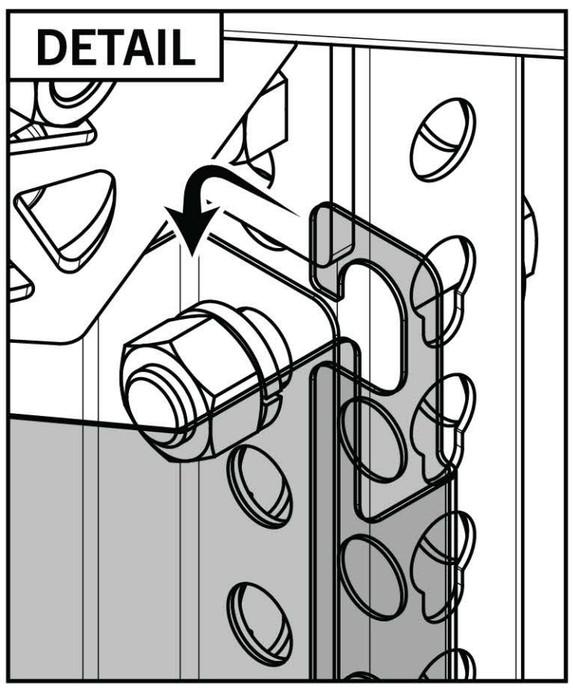

DETAIL

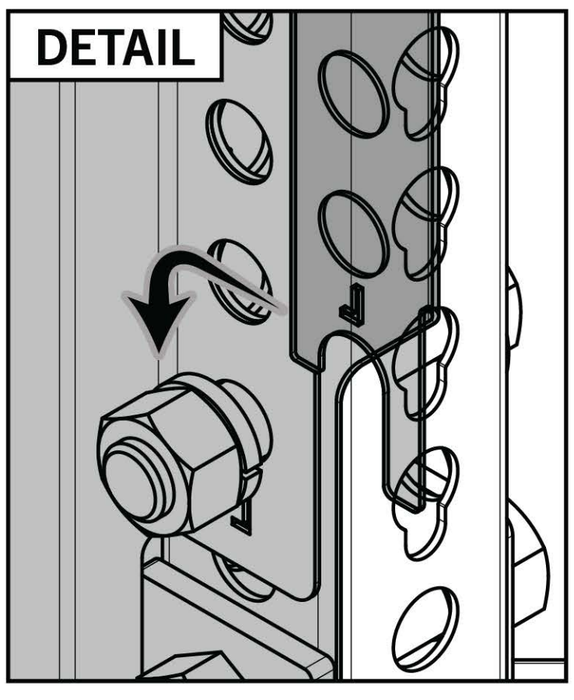

INCLUDED MONSTER STRIP

- *Hardware and tools not included for installing Monster Strips [**65**].
- (4X) 3/8” x 2-1/2” Wood Lag Screws and (4X) 3/8” Flat Washers (not included) are recommended if mounting Strip to wall or wood stud.
- 15/64” Diameter drill bit recommended if using 3/8” Lag Screws.
- Identify stud in wall and mark desired height of top hole. Drill pilot hole in marked location.
- Put thread-side of screw through washer then screw through top hole at the back of the Strip into wall until wood but do not fully tighten.
- Let strip hang and ensure it is square using a level then mark locations of the 3 remaining holes.
- Hold strip to the side as shown in **36-B** and drill pilot holes in the 3 marked locations.
- Put thread side of screw through the washer then screw through bottom 3/8” hole in back of Strip into the wall loosely.
- Screw in the remaining two Lag Screws and fully tighten all screws.
- If attempting to secure Strip to concrete or other material, the buyer is responsible for using correct hardware.
- It is the buyer’s responsibility to install strip in a location and with hardware capable of supporting the aggregate weight of strip, all gear mounted or stored, and any person using it.
- If you are not confident in your mechanical skills, please seek the help of a professional to perform the installation.

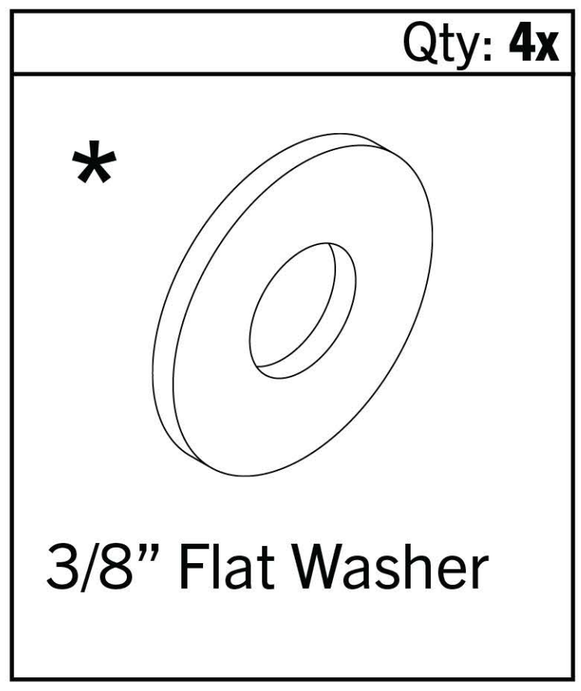

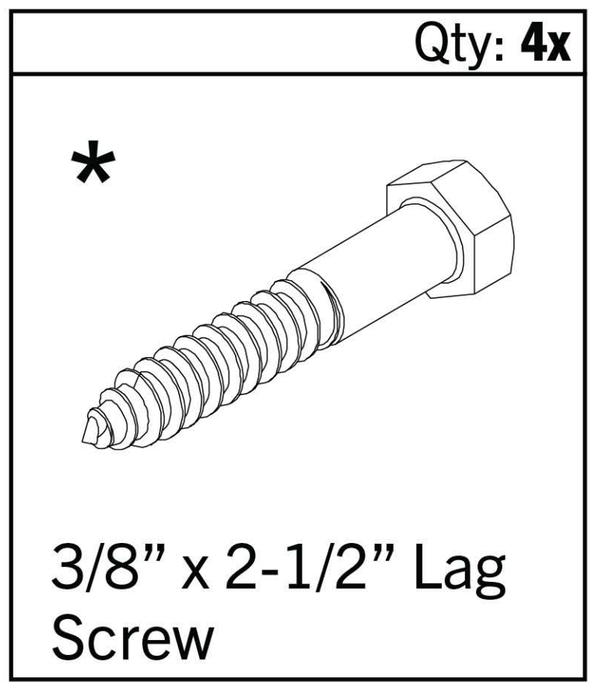

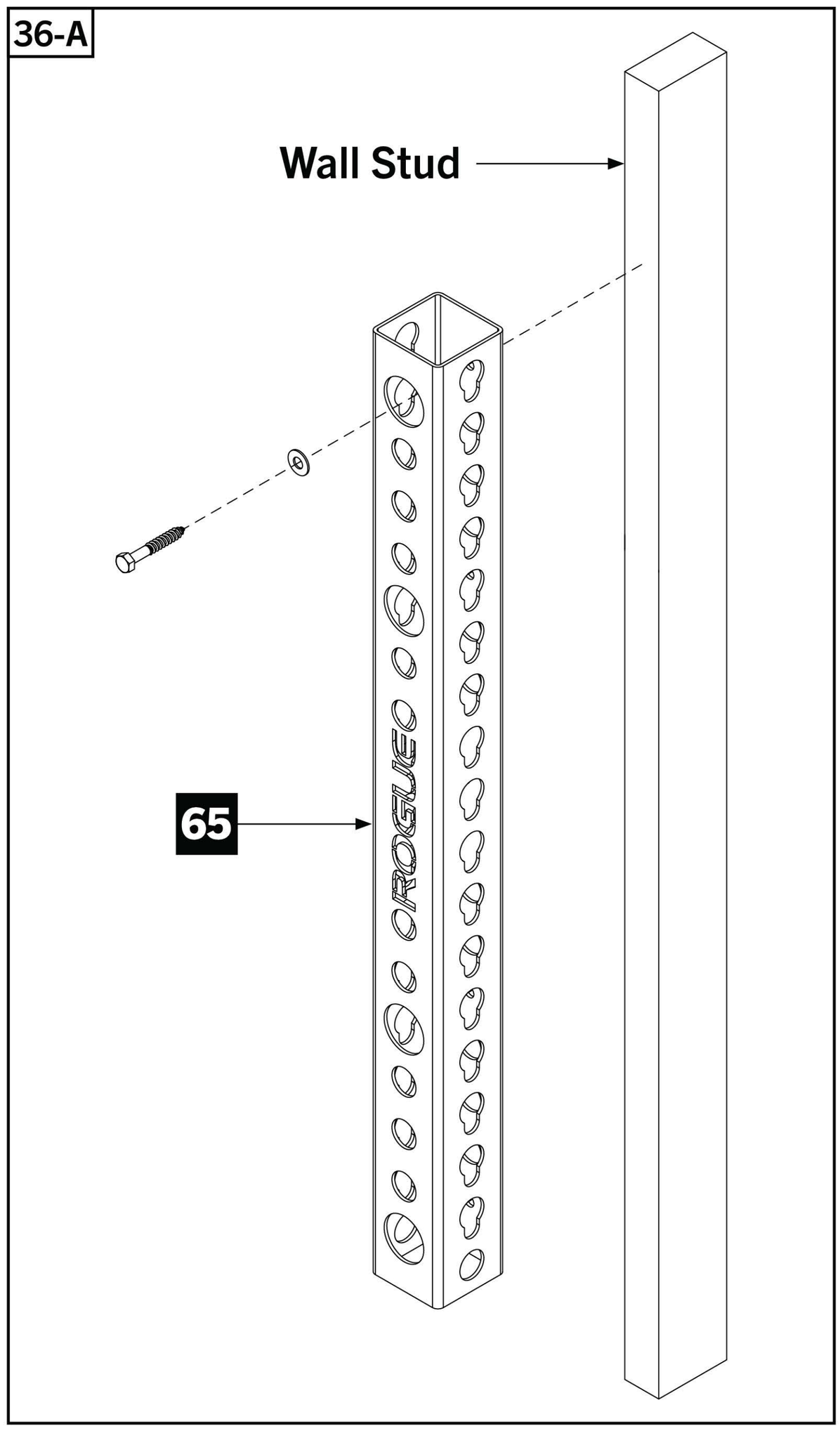

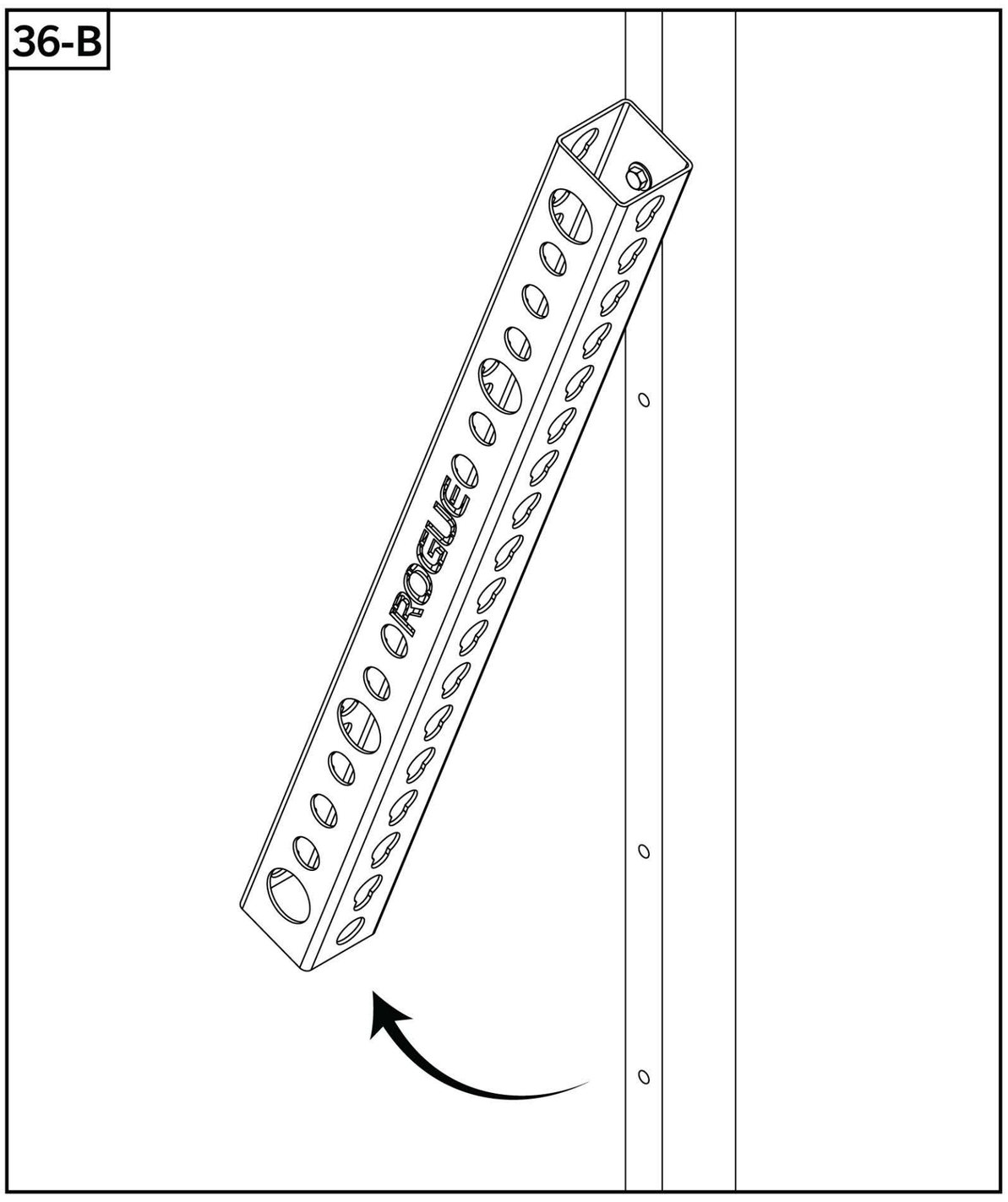

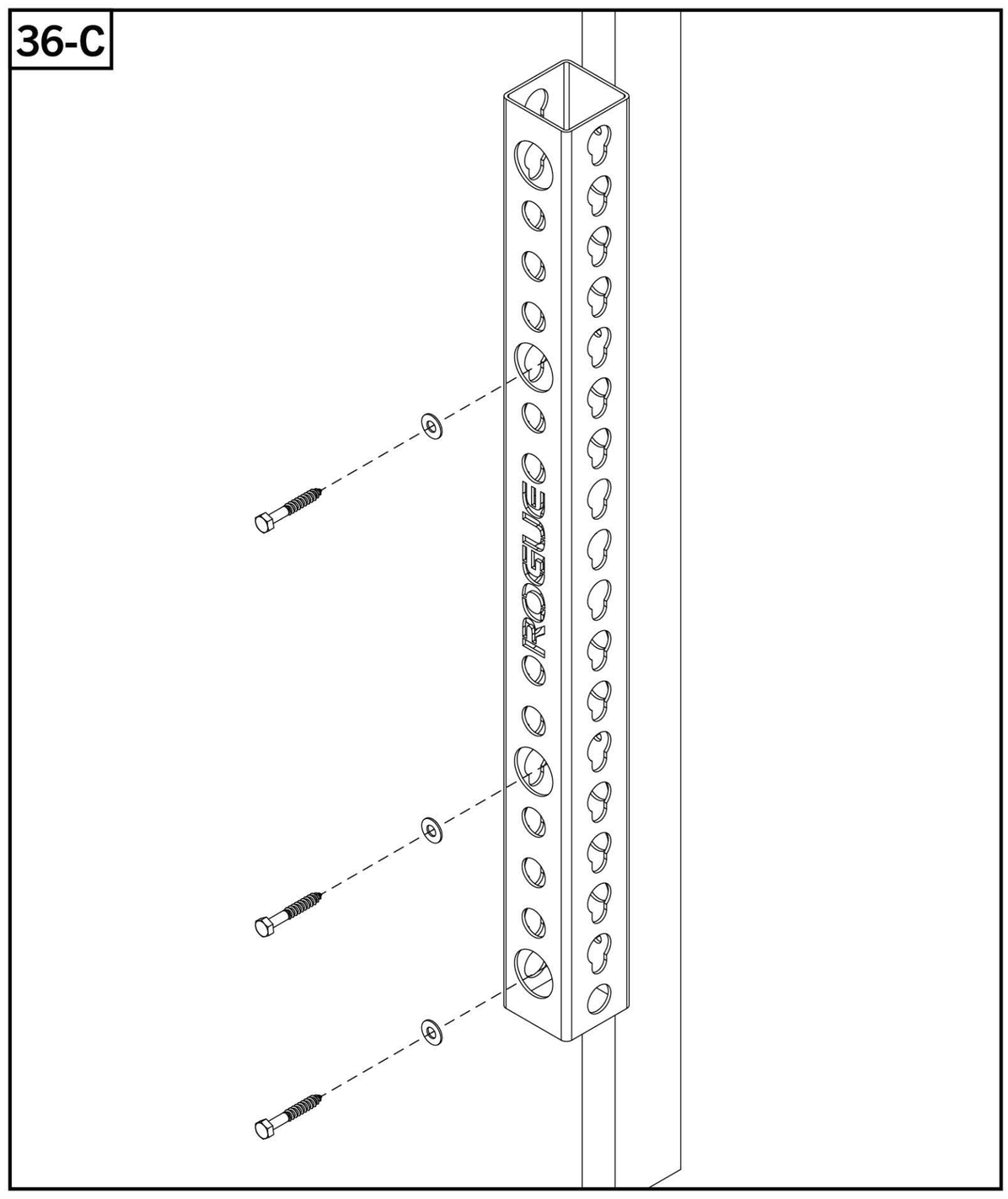

CABLE MAINTENANCE

Over time, the cables within the system may experience some normal inelastic stretching. Follow the below instructions to re-tighten the cables.

STEP 1

Tools Required:

- Multi Tool
- Tighten all four Low Side Cable bolt heads into stop blocks of Swivel Trolleys and Bottom Side Pulley Assemblies and retest the cable tightness.
- If cable system is tight, no further calibration is needed. If cables still have slack, proceed to **STEP 2.**

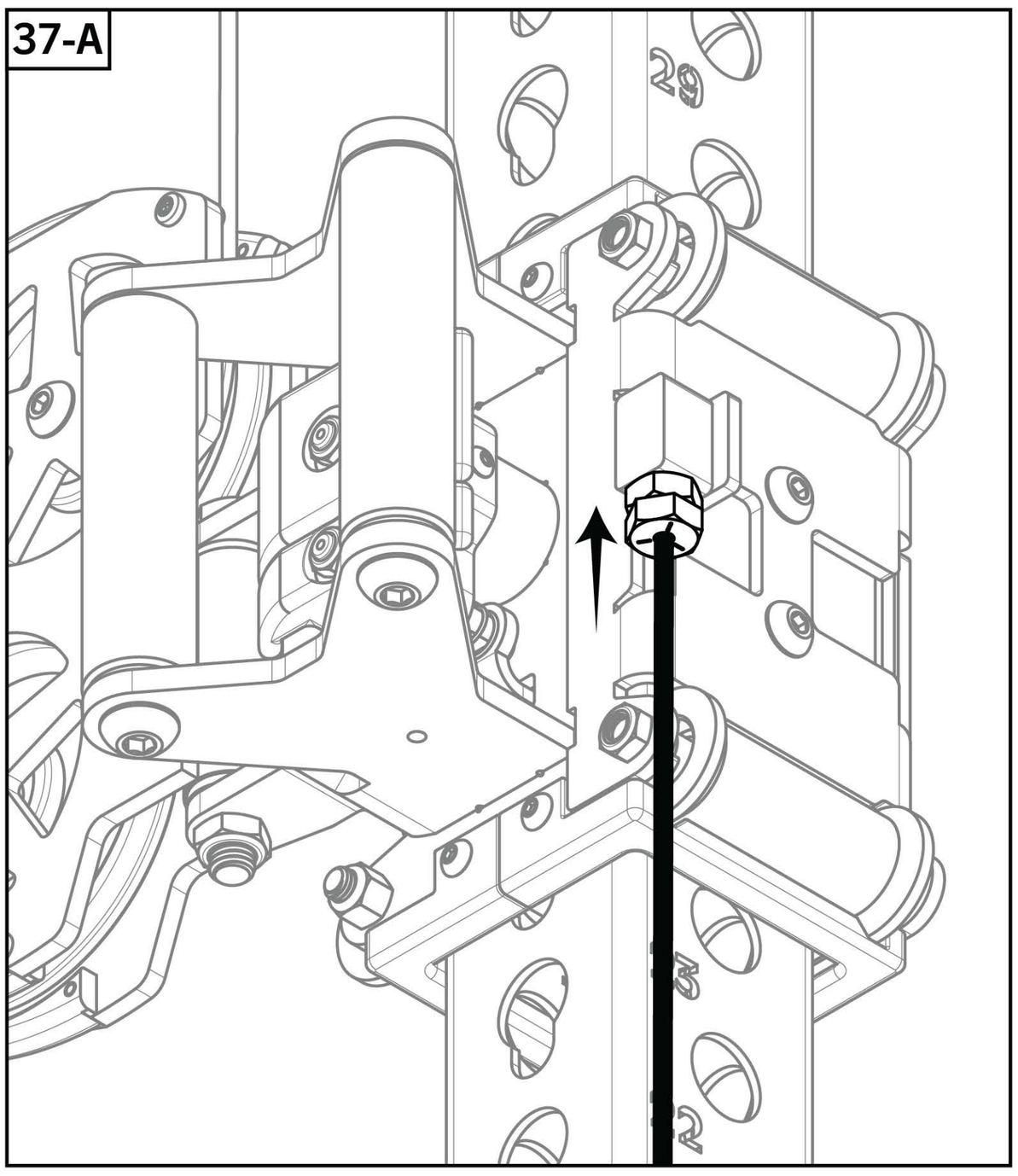

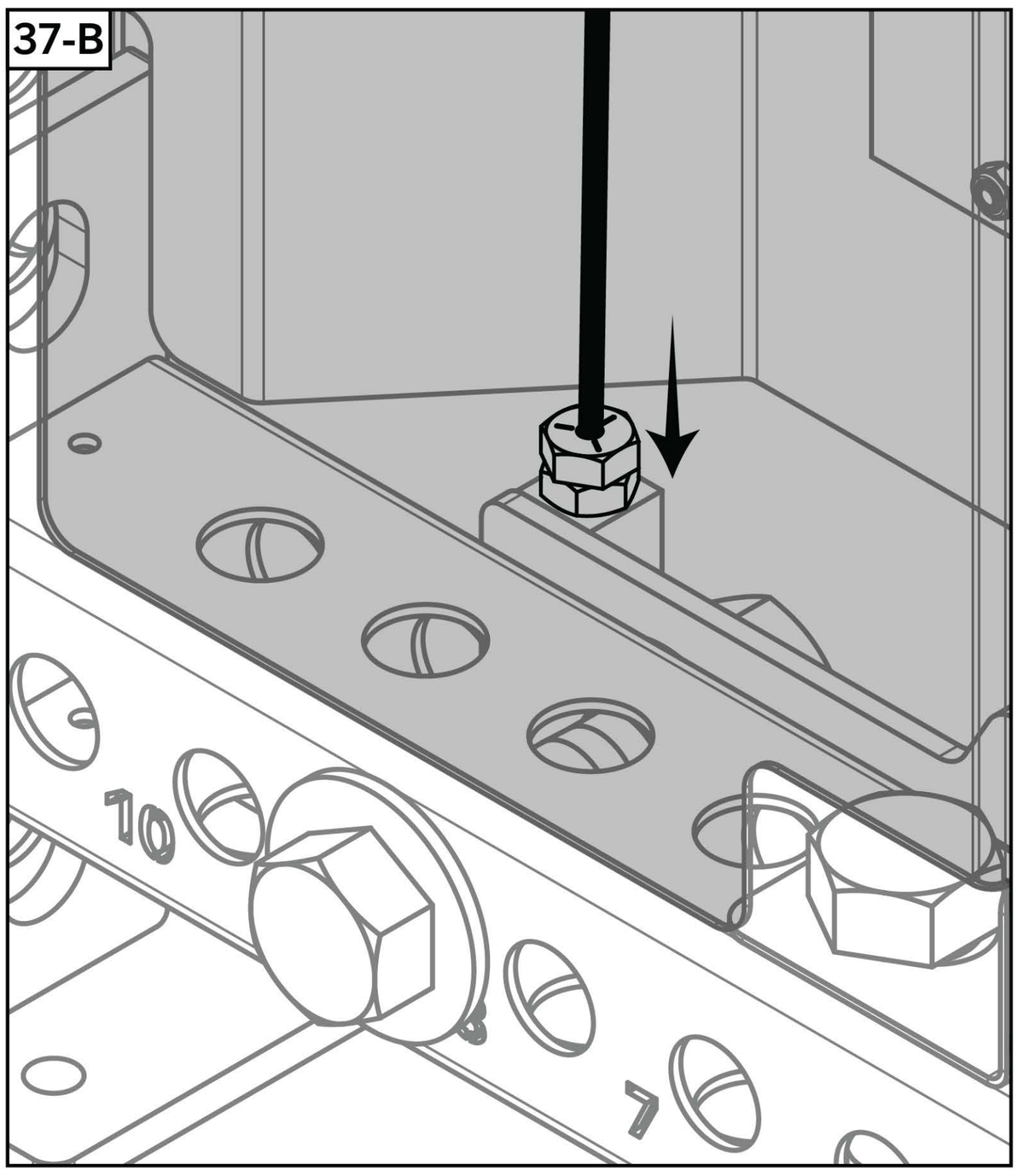

STEP 2

Tools Required:

- Multi Tool, 7/32” Allen Key
- Remove the Weight Stack Shrouds for easier access to the Rear Pulley.
- Lift the top plate stem 6”-8” and pin the stem to introduce slack to the system.
- Remove hardware shown in **38-B** on Rear Pulley Assembly and move Pulley and Cable Retainers up by one hole.
- Re-adjust the height of the Trolley Cable Bolts shown in **STEP 1** to calibrate the cable tightness.

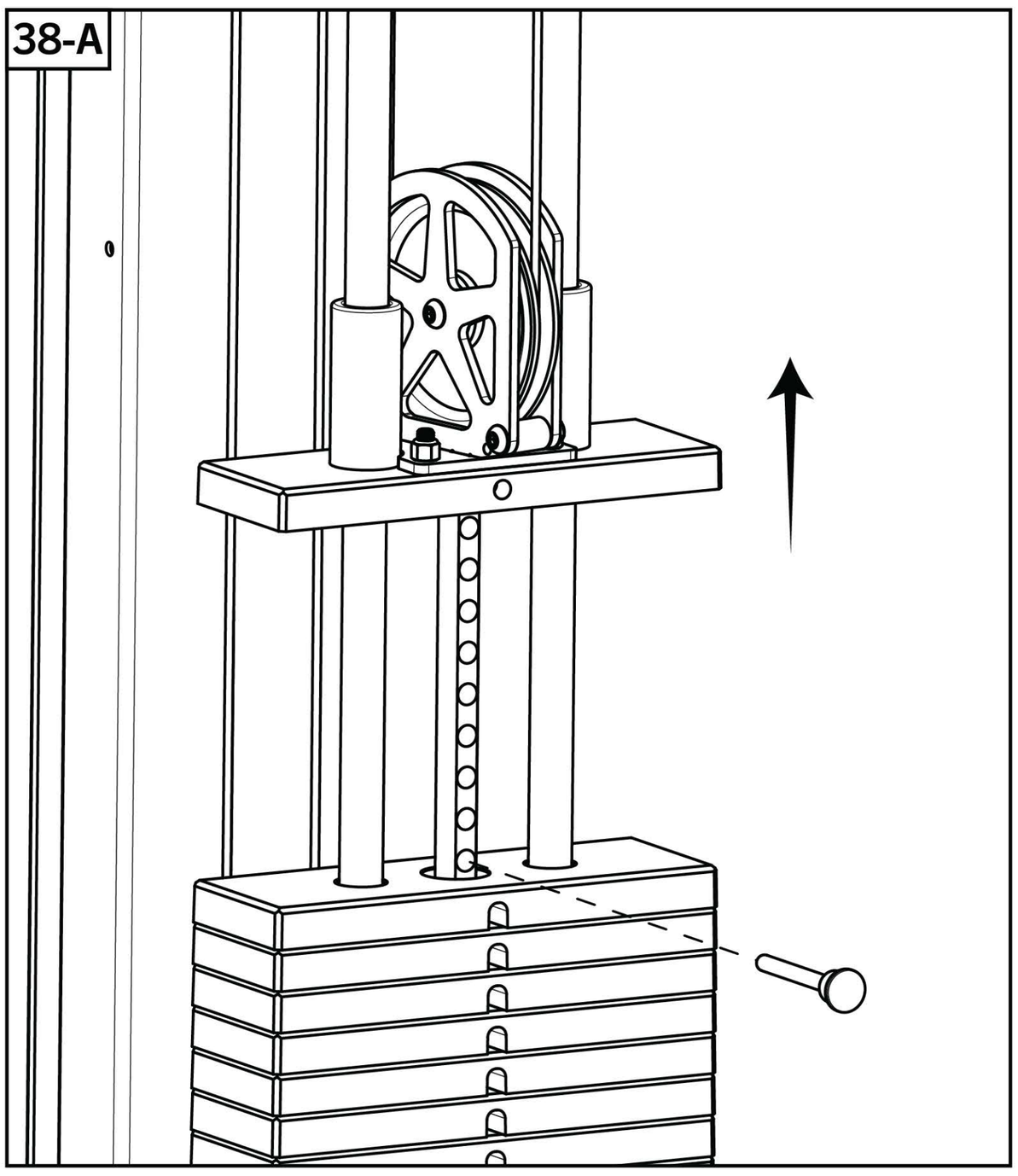

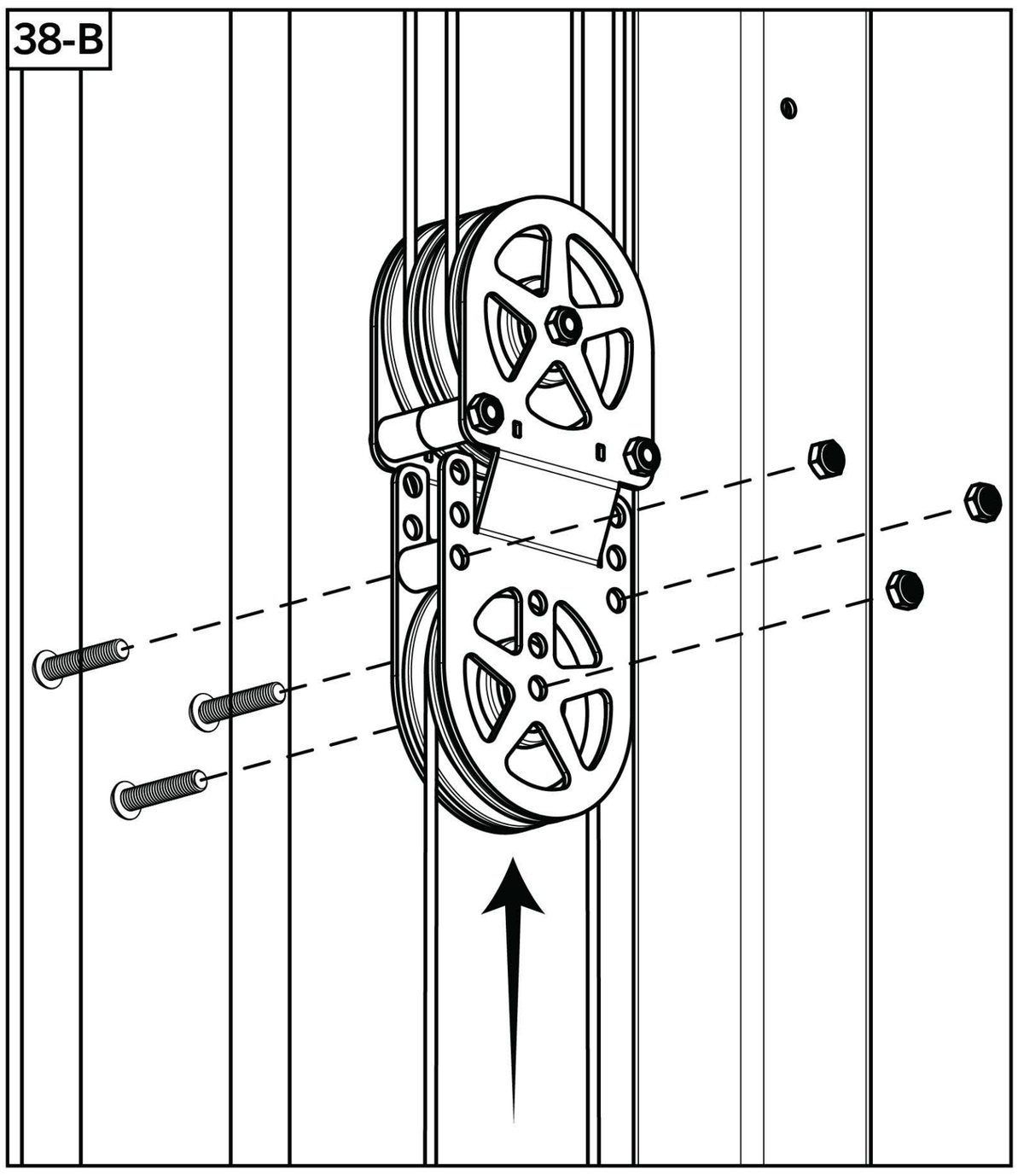

STEP 2 (CONTINUED)

- If slack persists, move Retainers and Pulley to the uppermost calibration hole and test again until cables are taught but aren't pulling up the weight stack.
- Carefully un-pin the top plate of the weight stack stem and lower plate back down to the rest of the stack.
- If the Pulley is in the uppermost hole and there is still slack in the cables, proceed to **STEP 3**.

38-C

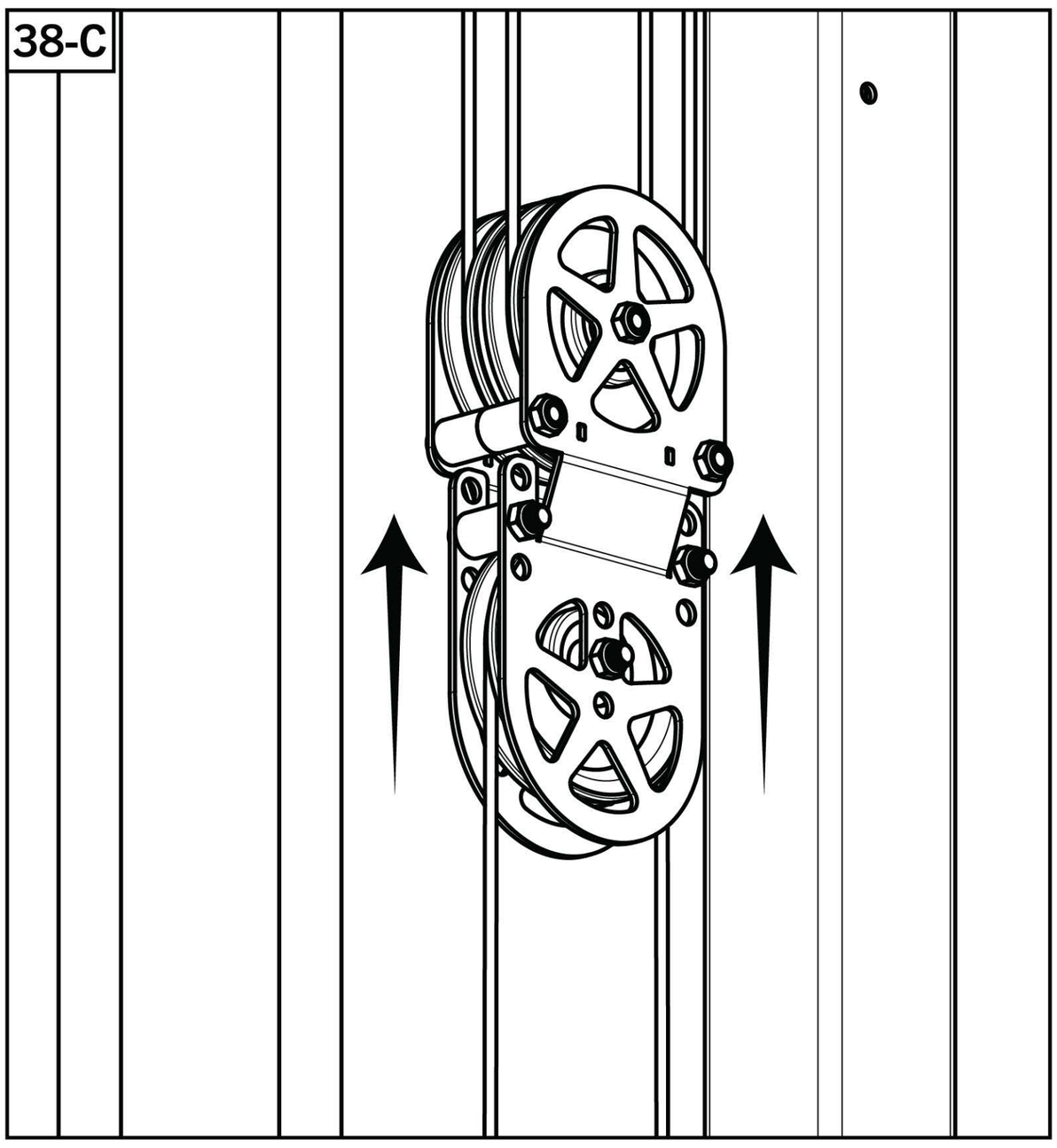

38-D

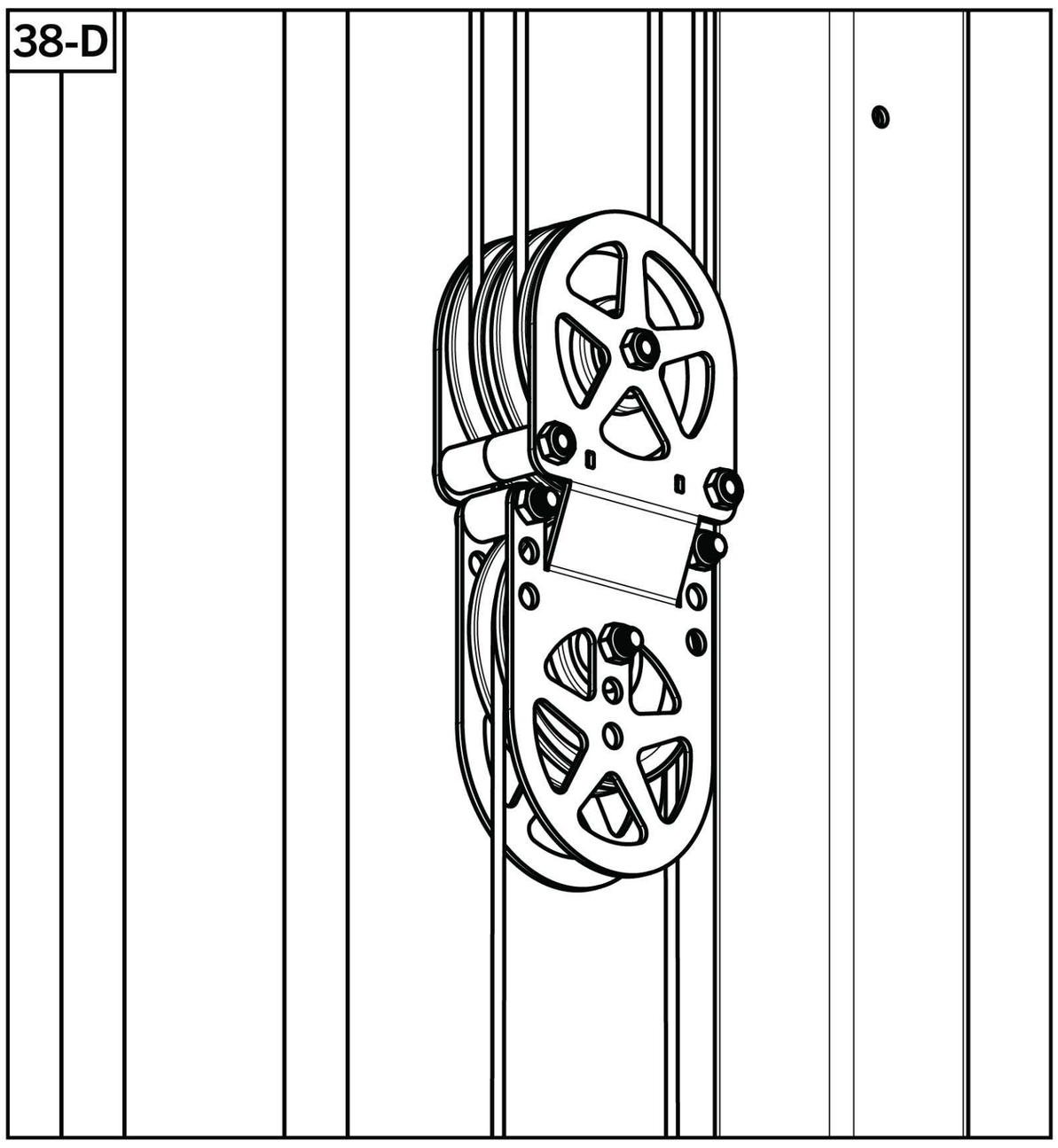

STEP 3

- Remove the Shroud Storage Panel - RH [**71**].
- Remove Cable Retainers and hardware from Side Peanut Pulley and move pulley up by one hole.
- Re-adjust the height of the Trolley Cable Bolts to calibrate the cable tightness.
- If slack persists, perform the same pulley relocation on the Left Side Peanut Pulley. Recalibrate the Trolley cable bolts and check cable tightness.
- If slack is still present, continue repeating process, alternating between the Left and Right Side Peanut Pulleys, raising the pulley by one hole until the whole cable system is taut but not pulling up the weight stack.

Note:

- If installing Pulley on the uppermost hole of the Side Peanut Pulleys, the lower Cable Retainers are not needed.

39-A

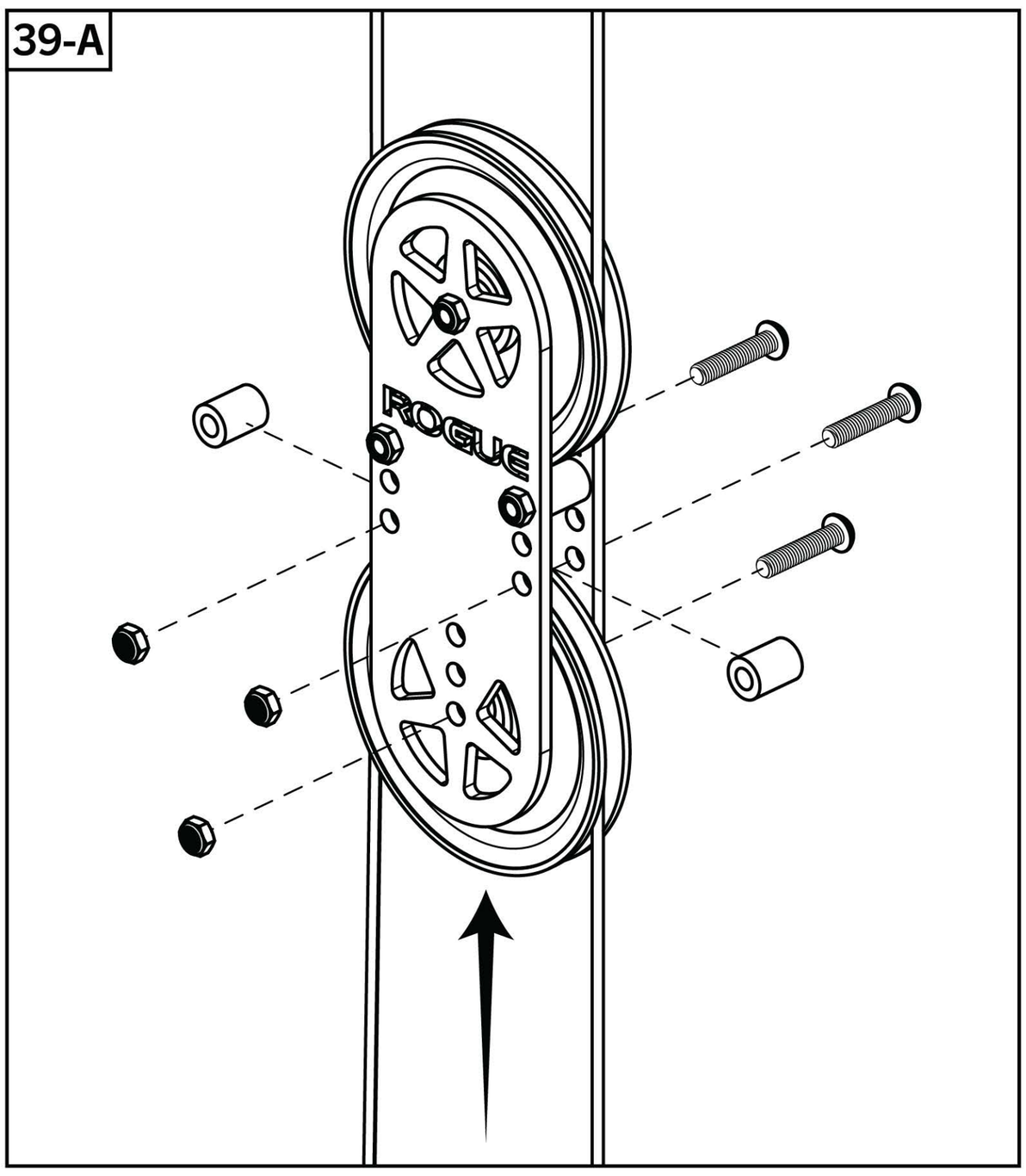

39-B

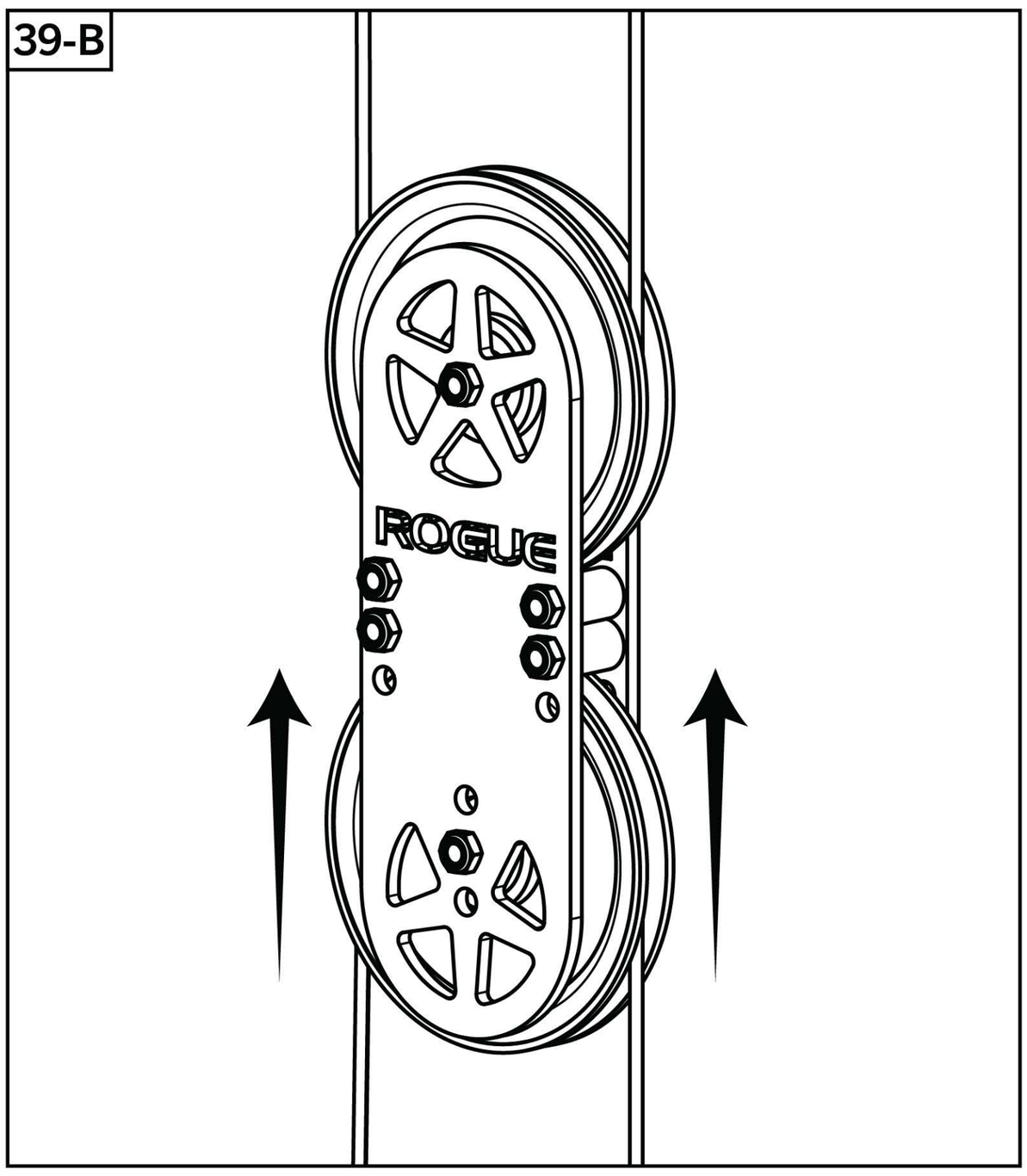

ROGUE

SCAN FOR INSTRUCTIONS

IRON GAME PROGRAMMING

IS0598-5